CITY OF GREEN BAY

STANDARD SPECIFICATIONS & CONSTRUCTION STANDARDS

For Public Works Construction

City of Green Bay, Wisconsin
Department of Public Works
100 North Jefferson Street, Room 300
(920) 448-3100
greenbaywi.gov

2020 Edition

SECTION 200

201 – BUILDING DEMOLITION
202 – CONTAMINATED SOIL EXCAVATION
203 – CONCRETE BRIDGES
204 – STEEL REINFORCEMENT AND STEEL BRIDGES
205 – CONCRETE OVERLAY AND STRUCTURE REPAIR
206 – RAILING
207 – BRIDGE PAINTING
208 – SUPPLEMENTAL ITEMS FOR STRUCTURES

SECTION 300

301 – CLEARING AND GRUBBING
302 – REMOVALS
303 – EXCAVATION
304 – EXCAVATION FOR STRUCTURES
305 – FILL
306 – GRANULAR BACKFILL
307 – STRUCTURAL BACKFILL
308 – PREPARING THE FOUNDATION
313 – EROSION CONTROL
314 – CONSTRUCTION STAKING
315 – TRAFFIC CONTROL
316 – PAVEMENT MARKING
317 – MOBILIZATION

SECTION 400

401 – SEWER REMOVALS AND ABANDONMENT
402 – SEWER TESTING
403 – SEWER TELEVISING
404 – TRENCH EXCAVATION, BEDDING AND BACKFILL
405 – ROCK EXCAVATION
406 – GROUND SUPPORT SYSTEMS
407 – SURFACE AND TRENCH WATER CONTROL
410 – TUNNELING
411 – BORE AND JACK
412 – HORIZONTAL DIRECTIONAL DRILLING
413 – SEWER PIPE MATERIALS
414 – SANITARY SEWER PIPES AND LATERALS
415 – STORM SEWER PIPES AND LATERALS
416 – STORM SEWER TRASH GRATES
417 – SEWER TRACER WIRE
418 – CULVERT PIPES
419 – SEWER STRUCTURES
420 – ADJUSTING MANHOLES AND INLETS
421 – MINI-STORM SEWERS
422 – MANHOLE REHABILITATION
423 – CURED-IN-PLACE PIPE (CIPP)

SECTION 500 – WATER MAIN
- **501 – GENERAL REQUIREMENTS FOR WATER MAIN CONSTRUCTION**
- **502 – BORING AND JACKING - WATER**
- **503 – HORIZONTAL DIRECTIONAL DRILLING - WATER**
- **504 – WATER MAIN PIPE AND FITTINGS**
- **505 – WATER MAIN VALVES AND BOXES**
- **506 – TAPPING SLEEVES AND VALVES**
- **507 – FIRE HYDRANTS**
- **508 – WATER SERVICES**

SECTION 600
- **601 – AGGREGATES AND BASE**
- **602 – CONCRETE PAVEMENT**
- **603 – CURB AND GUTTER**
- **604 – CONCRETE SIDEWALK**
- **605 – MUDJACKING**
- **607 – JOINT AND CRACK SEALING**
- **608 – ASPHALTIC PAVEMENT**
- **610 – ROADSIDE BARRIERS**
- **611 – DETECTABLE WARNING FIELDS**
- **612 – GEOTEXTILE FABRICS**
- **613 – SAWING PAVEMENT**

SECTION 700
- **701 – ELECTRICAL CONDUIT**
- **702 – PULL BOXES AND JUNCTION BOXES**
- **703 – CONCRETE BASES**
- **704 – ELECTRICAL WIRING**
- **705 – ELECTRICAL SERVICE**
- **706 – POLES, ARMS, STANDARDS AND BASES**
- **707 – TRAFFIC SIGNALS**
- **708 – LIGHTING**
- **709 – TEMPORARY TRAFFIC SIGNAL**

SECTION 800
- **801 – TOPSOIL**
- **802 – MULCHING**
- **803 – FERTILIZER**
- **804 – SEEDING**
- **805 – SOD**
- **806 – SITE RESTORATION**
- **807 – FURNISHING AND PLANTING PLANT MATERIALS**
- **808 – FENCE**
- **809 – BRICK PAVERS**
- **810 – SPLIT BLOCK RETAINING WALL**

BID ITEMS

DEPARTMENT OF PUBLIC WORKS
ENGINEERING DIVISION
100 N. Jefferson Street, Room 300
Green Bay, WI 54301
Tel (920) 448-3100

STANDARD BID ITEMS

ITEM #	DESCRIPTION	UNIT
	201 - BUILDING DEMOLITION	
201.01	Removing Building	LS
201.02	Site Clearance (Parcel)	LS
	202 - CONTAMINATED SOIL EXCAVATION	
202.01	Excavation of Contaminated Soil	CY
202.02	Handling Contaminated Groundwater	GAL
	203 - CONCRETE BRIDGES	
203.01	Concrete Masonry Bridges	CY
203.02	Compression Joint Sealer	LF
203.03	Protective Surface Treatment	SY
203.04	Epoxy Crack Sealing	LF
203.05	Cove Sealant	LF
203.06	Adjusting Floor Drains	EACH
	204 - STEEL REINFORCEMENT AND STEEL BRIDGES	
204.01	Bar Steel Reinforcement HS Structures	LB
204.02	Bar Steel Reinforcement HS Coated Structures	LB
204.03	Structural Steel Carbon	LB
	205 - CONCRETE OVERLAY AND STRUCTURE REPAIR	
205.01	Preparation Approaches	SY
205.02	Preparation Decks Type 1	SY
205.03	Preparation Decks Type 2	SY
205.04	Full-Depth Deck Repair	SY
205.05	Cleaning Decks	SY
205.06	Cleaning Approaches	SY
205.07	Concrete Surface Repair	SF
205.08	Joint Repair	SY
205.09	Curb Repair	LF
205.10	Concrete Masonry Overlay Decks	CY
205.11	Concrete Masonry Overlay Approaches	CY
	206 - RAILING	
206.01	Railing Pipe	LF
206.02	Railing Tubular	LF
206.03	Railing Steel	LF
206.04	Railing Steel Pedestrian	LF
	207 - BRIDGE PAINTING	
207.01	Structure Repaint Recycle Abrasive	LS
207.02	Cleaning and Painting Bearings	EACH
	208 - SUPPLEMENTAL ITEMS FOR STRUCTURES	
208.01	Debris Containment	LS
208.02	Portable Decontamination Facility	EACH
208.03	Negative Pressure Containment & Collection of Waste Material	LS
208.04	Refill & Reseal Crushed Aggregate Slope Paving	SY

ITEM #	DESCRIPTION	UNIT
	301 - CLEARING & GRUBBING	
301.01	Clearing and Grubbing	ID
301.02	Clearing and Grubbing	STA
301.03	Clearing	ID
301.04	Clearing	STA
301.05	Grubbing	ID
301.06	Grubbing	STA
	302 - REMOVALS	
302.01	Removing Small Culvert Pipes	EACH
302.02	Removing Old Structure (station)	LS
302.03	Removing Pavement	SY
302.04	Removing Asphalt Surface	SY
302.05	Removing Asphalt Surface Milling	SY
302.06	Removing Asphalt Surface Milling	TON
302.07	Removing Curb	LF
302.08	Removing Curb & Gutter	LF
302.09	Removing Concrete Sidewalk & Driveways	SY
302.10	Removing Guardrail	LF
302.11	Removing Fence	LF
302.12	Removing Concrete Bases	EACH
302.23	Removing Brick Pavers	SY
	303 - EXCAVATION	
303.01	Excavation	CY
303.02	Excavation Below Subgrade	CY
303.03	Extra Excavation	SY
303.04	Stripping Topsoil	CY
	304 - EXCAVATION FOR STRUCTURES	
304.01	Bridge Excavation	LS
304.02	Culvert Excavation	LS
304.03	Retaining Wall Excavation	LS
	305 - FILL	
305.01	Borrow	CY
305.02	Engineered Fill	CY
	306 - GRANULAR BACKFILL	
306.01	Granular Backfill	CY
	307 - STRUCTURAL BACKFILL	
307.01	Structural Backfill	CY
	308 - PREPARING THE FOUNDATION	
308.01	Prepare Foundation for Asphaltic Paving	LF
308.02	Prepare Foundation for Concrete Pavement	LF
308.03	Prepare Foundation for Pavement	SY
	313 - EROSION CONTROL	
313.01	Erosion Bales	EACH
313.02	Silt Fence	LF
313.03	Inlet Protection Maintenance Only	EACH

ITEM #	DESCRIPTION	UNIT
313.04	Erosion Mat Class I, Type A	SY
313.05	Erosion Mat Class I, Type B	SY
313.06	Erosion Mat Urban Class I, Type A	SY
313.07	Erosion Mat Urban Class I, Type B	SY
313.08	Erosion Mat Class II, Type A	SY
313.09	Erosion Mat Class II, Type B	SY
313.10	Erosion Mat Class II, Type C	SY
313.11	Erosion Mat Class III, Type A	SY
313.12	Erosion Mat Class III, Type B	SY
313.13	Erosion Mat Class III, Type C	SY
313.14	Erosion Mat Class III, Type D	SY
313.15	Polyethylene Sheeting	SY
313.16	Turbidity Barrier	SY
313.17	Soil Stabilizer	ACRE
313.18	Inlet Protection, Type A	EACH
313.19	Inlet Protection, Type B	EACH
313.20	Inlet Protection, Type C	EACH
313.21	Inlet Protection, Type D	EACH
313.22	Light Riprap	CY
313.23	Medium Riprap	CY
313.24	Heavy Riprap	CY
313.25	Extra-Heavy Riprap	CY
313.26	Grouted Riprap Light	CY
313.27	Grouted Riprap Medium	CY
313.28	Grouted Riprap Heavy	CY
313.29	Tracking Pad	EACH
313.30	Rock Filled Erosion Control Bags	EACH
313.31	Temporary Ditch Check	EACH
313.32	Culvert Pipe Check	EACH

314 - CONSTRUCTION STAKING

314.01	Construction Staking Sanitary Sewer Mainline	LF
314.02	Construction Staking Storm Sewer Mainline	LF
314.03	Construction Staking Sanitary Sewer Manhole	EACH
314.04	Construction Staking Storm Sewer Manhole	EACH
314.05	Construction Staking Storm Sewer Inlets	EACH
314.06	Construction Staking Initial Layout	LF
314.07	Construction Staking Subgrade	LF
314.08	Construction Staking Base	LF
314.09	Construction Staking Curb & Gutter	LF
314.10	Construction Staking Concrete Pavement	LF
314.11	Construction Staking Pipe Culverts	EACH
314.12	Construction Staking Flume	EACH
314.13	Construction Staking Electrical Pull Box/Base	EACH
314.14	Construction Staking Water Mainline	LF
314.15	Construction Staking Curb Ramp	EACH
314.16	Construction Staking Project	LS

315 - TRAFFIC CONTROL

315.01	Traffic Control (Project)	LS
315.02-15	Traffic Control (Street)	EACH

316 - PAVEMENT MARKING

316.01	Pavement Marking Epoxy 4-Inch	LF
316.02	Pavement Marking Epoxy 6-Inch	LF
316.03	Pavement Marking Channelizing Epoxy 8-Inch	LF

ITEM #	DESCRIPTION	UNIT
316.04	Removing Pavement Markings	LF
316.05	Pavement Marking Railroad Crossings Epoxy	LF
316.06	Pavement Marking Arrows Epoxy Type 1	EACH
316.07	Pavement Marking Arrows Epoxy Type 2	EACH
316.08	Pavement Marking Arrows Epoxy Type 3	EACH
316.09	Pavement Marking Arrows Epoxy Type 4	EACH
316.10	Pavement Marking Arrows Epoxy Type 5	EACH
316.11	Pavement Marking Arrows Bike Lane Epoxy	EACH
316.12	Pavement Marking Symbols Epoxy	EACH
316.13	Pavement Marking Symbols Bike Lane Epoxy	EACH
316.14	Pavement Marking Words Epoxy	EACH
316.15	Pavement Marking Words Bike Lane Epoxy	EACH
316.16	Pavement Marking Curb Epoxy	LF
316.17	Pavement Marking Curb Ramp Epoxy	LF
316.18	Pavement Marking Stop Line Epoxy 12-Inch	LF
316.19	Pavement Marking Stop Line Epoxy 18-Inch	LF
316.20	Pavement Marking Stop Line Epoxy 24-Inch	LF
316.21	Pavement Marking Island Nose Epoxy	EACH
316.22	Pavement Marking Parking Stall Epoxy	LF
316.23	Pavement Marking Diagonal Epoxy 6-Inch	LF
316.24	Pavement Marking Diagonal Epoxy 8-Inch	LF
316.25	Pavement Marking Diagonal Epoxy 12-Inch	LF
316.26	Pavement Marking Diagonal Epoxy 18-Inch	LF
316.27	Pavement Marking Diagonal Epoxy 24-Inch	LF
316.28	Pavement Marking Crosswalk Epoxy 6-Inch	LF
316.29	Pavement Marking Crosswalk Epoxy 12-Inch	LF
316.30	Pavement Marking Crosswalk Epoxy 18-Inch	LF
316.31	Pavement Marking Concrete Corrugated Median Epoxy	SF
316.32	Removing Pavement Markings Arrows	EACH
316.33	Removing Pavement Markings Symbols	EACH
316.34	Removing Pavement Markings Words	EACH
316.35	Temporary Pavement Marking Paint	LF
316.36	Temporary Pavement Marking Removable Tape 4-Inch	LF

317 - MOBILIZATION

317.01	Mobilization	LS
317.02	Mobilization	EACH

401 - SEWER REMOVALS & ABANDONMENT

401.01	Removing Manholes	EACH
401.02	Removing Catch Basins	EACH
401.03	Removing Inlets	EACH
401.04	Removing Septic Tanks	EACH
401.05	Remove Sanitary Sewer - 8"	LF
401.06	Remove Sanitary Sewer - 10"	LF
401.07	Remove Sanitary Sewer - 12"	LF
401.08	Remove Sanitary Sewer - 15"	LF
401.09	Remove Sanitary Sewer - 18"	LF
401.10	Remove Sanitary Sewer - 21"	LF
401.11	Remove Sanitary Sewer - 24"	LF
401.12	Remove Sanitary Sewer - 27"	LF
401.13	Remove Sanitary Sewer - 30"	LF
401.14	Remove Sanitary Sewer - 36"	LF
401.15	Remove Sanitary Sewer - 42"	LF

ITEM #	DESCRIPTION	UNIT
401.16	Remove Sanitary Sewer - 48"	LF
401.17	Remove Sanitary Sewer - (Size)	LF
401.18	Remove Storm Sewer - 10"	LF
401.19	Remove Storm Sewer - 12"	LF
401.20	Remove Storm Sewer - 15"	LF
401.21	Remove Storm Sewer - 18"	LF
401.22	Remove Storm Sewer - 21"	LF
401.23	Remove Storm Sewer - 24"	LF
401.24	Remove Storm Sewer - 27"	LF
401.25	Remove Storm Sewer - 30"	LF
401.26	Remove Storm Sewer - 36"	LF
401.27	Remove Storm Sewer - 42"	LF
401.28	Remove Storm Sewer - 48"	LF
401.29	Remove Storm Sewer - (Size)	LF
401.30	Remove Culvert - 10"	LF
401.31	Remove Culvert - 12"	LF
401.32	Remove Culvert - 15"	LF
401.33	Remove Culvert - 18"	LF
401.34	Remove Culvert - 21"	LF
401.35	Remove Culvert - 24"	LF
401.36	Remove Culvert - 27"	LF
401.37	Remove Culvert - 30"	LF
401.38	Remove Culvert - 36"	LF
401.39	Remove Culvert - 42"	LF
401.40	Remove Culvert - 48"	LF
401.41	Remove Culvert - (Size)	LF
401.42	Remove Inlet Lead - 10"	LF
401.43	Remove Inlet Lead - 12"	LF
401.44	Remove Inlet Lead - 15"	LF
401.45	Remove Inlet Lead - (Size)	LF
401.46	Remove Sanitary Manhole	EACH
401.47	Remove Storm Manhole	EACH
401.48	Remove Storm Catch Basin	EACH
401.49	Remove Standard Inlet	EACH
401.50	Remove Special Inlet	EACH
401.51	Remove Yard Drain / Inlet	EACH
401.52	Remove Pot	EACH
401.53	Abandon Sanitary Manhole	EACH
401.54	Abandon Storm Manhole	EACH
401.55	Abandon Standard Inlet	EACH
401.56	Abandon Special Inlet	EACH
401.57	Abandoning Catch Basins	EACH
401.58	Abandoning Culvert Pipes	EACH
401.59	Abandon Sanitary Sewer - 8"	LF
401.60	Abandon Sanitary Sewer - 10"	LF
401.61	Abandon Sanitary Sewer - 12"	LF
401.62	Abandon Sanitary Sewer - 15"	LF
401.63	Abandon Sanitary Sewer - 18"	LF
401.64	Abandon Sanitary Sewer - 21"	LF
401.65	Abandon Sanitary Sewer - 24"	LF
401.66	Abandon Sanitary Sewer - 27"	LF
401.67	Abandon Sanitary Sewer - 30"	LF
401.68	Abandon Sanitary Sewer - 36"	LF
401.69	Abandon Sanitary Sewer - 42"	LF
401.70	Abandon Sanitary Sewer - 48"	LF

ITEM #	DESCRIPTION	UNIT
401.71	Abandon Sanitary Sewer - (Size)	LF
401.72	Abandon Storm Sewer - 10"	LF
401.73	Abandon Storm Sewer - 12"	LF
401.74	Abandon Storm Sewer - 15"	LF
401.75	Abandon Storm Sewer - 18"	LF
401.76	Abandon Storm Sewer - 21"	LF
401.77	Abandon Storm Sewer - 24"	LF
401.78	Abandon Storm Sewer - 27"	LF
401.79	Abandon Storm Sewer - 30"	LF
401.80	Abandon Storm Sewer - 36"	LF
401.81	Abandon Storm Sewer - 42"	LF
401.82	Abandon Storm Sewer - 48"	LF
401.83	Abandon Storm Sewer - (Size)	LF
401.84	Abandon Mini-Storm Sewer	LF
401.85	Abandon Culvert - 10"	LF
401.86	Abandon Culvert - 12"	LF
401.87	Abandon Culvert - 15"	LF
401.88	Abandon Culvert - 18"	LF
401.89	Abandon Culvert - 21"	LF
401.90	Abandon Culvert - 24"	LF
401.91	Abandon Culvert - 27"	LF
401.92	Abandon Culvert - 30"	LF
401.93	Abandon Culvert - 36"	LF
401.94	Abandon Culvert - 42"	LF
401.95	Abandon Culvert - 48"	LF
401.96	Abandon Culvert - (Size)	LF

402 - SEWER TESTING

402.01	Sewer Testing	LS
402.02	Sewer Testing (8")	LF
402.03	Sewer Testing (10")	LF
402.04	Sewer Testing (12")	LF
402.05	Sewer Testing (15")	LF
402.06	Sewer Testing (18")	LF
402.07	Sewer Testing (21")	LF
402.08	Sewer Testing (24")	LF
402.09	Sewer Testing (27")	LF
402.10	Sewer Testing (30")	LF
402.11	Sewer Testing (36")	LF

403 - SEWER TELEVISING

403.01	Standard Televising - All Sizes	LF
403.02	Inlet Lead Televising - All Sizes	LF
403.03	Heavy Cleaning - All Sizes	LF
403.04	Emergency Televising - All Sizes	HOUR
403.05	Manhole Inspection	EACH

404 - TRENCH EXCAVATION, BEDDING AND BACKFILL

404.01	1.5" Stone Cradle Sanitary Sewer	TON
404.02	3" Stone Cradle Sanitary Sewer	TON
404.03	1.5" Stone Cradle Storm Sewer	TON
404.04	3" Stone Cradle Storm Sewer	TON
404.05	Insulation	LF
404.06	Additional Embankment Fill	CY
404.07	Slurry Backfill	CY

ITEM #	DESCRIPTION	UNIT
404.08	Sewer Stabilization Aggregate	TON
404.09	Concrete Blanket	EACH
404.10	Concrete Encasement	EACH

405 - ROCK EXCAVATION

405.01	Rock Blasting - Sanitary Sewer Main	LF
405.02	Rock Blasting - Sanitary Sewer Lateral	LF
405.03	Rock Blasting - Storm Sewer Main	LF
405.04	Rock Blasting - Storm Sewer Lateral	LF
405.05	Rock Blasting - Storm Sewer Lead	LF
405.06	Rock Blasting - Water Main	LF
405.07	Rock Blasting - Water Service	LF
405.08	Rock Grinding - Sanitary Sewer Main	LF
405.09	Rock Grinding - Sanitary Sewer Lateral	LF
405.10	Rock Grinding - Storm Sewer Main	LF
405.11	Rock Grinding - Storm Sewer Lateral	LF
405.12	Rock Grinding - Storm Sewer Lead	LF
405.13	Rock Grinding - Water Main	LF
405.14	Rock Grinding - Water Service	LF
405.15	Boulder Excavation	CY

406 - GROUND SUPPORT SYSTEMS

406.01	Ground Support System	LS

407 - SURFACE AND TRENCH WATER CONTROL

407.01	Type I Dewatering	LS
407.02	Type II Dewatering	LS
407.03	Dewatering	LS

410 - TUNNELING

410.01	Tunneling - 8"	LF
410.02	Tunneling - 10"	LF
410.03	Tunneling - 12"	LF
410.04	Tunneling - 15"	LF
410.05	Tunneling - 18"	LF
410.06	Tunneling - 21"	LF
410.07	Tunneling - 24"	LF
410.08	Tunneling - 27"	LF
410.09	Tunneling - 30"	LF
410.10	Tunneling - 36"	LF
410.11	Tunneling - 42"	LF
410.12	Tunneling - 48"	LF
410.13	Tunneling - 56"	LF
410.14	Tunneling - 60"	LF
410.15	Tunneling - 66"	LF
410.16	Tunneling - 72"	LF

411 - BORE AND JACK

411.01	Bore & Jack - 8" Sanitary Sewer	LF
411.02	Bore & Jack - 12" Sanitary Sewer	LF
411.03	Bore & Jack - 15" Sanitary Sewer	LF
411.04	Bore & Jack - 18" Sanitary Sewer	LF
411.05	Bore & Jack - 21" Sanitary Sewer	LF
411.06	Bore & Jack - 24" Sanitary Sewer	LF
411.07	Bore & Jack - 27" Sanitary Sewer	LF

ITEM #	DESCRIPTION	UNIT
411.08	Bore & Jack - 30" Sanitary Sewer	LF
411.09	Bore & Jack - 36" Sanitary Sewer	LF
411.10	Bore & Jack - 12" Storm Sewer	LF
411.11	Bore & Jack - 15" Storm Sewer	LF
411.12	Bore & Jack - 18" Storm Sewer	LF
411.13	Bore & Jack - 21" Storm Sewer	LF
411.14	Bore & Jack - 24" Storm Sewer	LF
411.15	Bore & Jack - 27" Storm Sewer	LF
411.16	Bore & Jack - 30" Storm Sewer	LF
411.17	Bore & Jack - 36" Storm Sewer	LF
411.18	Bore & Jack - 42" Storm Sewer	LF
411.19	Bore & Jack - 48" Storm Sewer	LF

412 - HORIZONTAL DIRECTIONAL DRILLING

412.01	Directional Bore - 8" Sanitary Sewer	LF
412.02	Directional Bore - 10" Sanitary Sewer	LF
412.03	Directional Bore - 12" Sanitary Sewer	LF
412.04	Directional Bore - 14" Sanitary Sewer	LF
412.05	Directional Bore - 16" Sanitary Sewer	LF
412.06	Directional Bore - 18" Sanitary Sewer	LF
412.07	Directional Bore - 20" Sanitary Sewer	LF
412.08	Directional Bore - 22" Sanitary Sewer	LF
412.09	Directional Bore - 24" Sanitary Sewer	LF
412.10	Directional Bore - 26" Sanitary Sewer	LF
412.11	Directional Bore - 28" Sanitary Sewer	LF
412.12	Directional Bore - 30" Sanitary Sewer	LF
412.13	Directional Bore - 32" Sanitary Sewer	LF
412.14	Directional Bore - 34" Sanitary Sewer	LF
412.15	Directional Bore - 36" Sanitary Sewer	LF
412.16	Directional Bore - 8" Storm Sewer	LF
412.17	Directional Bore - 10" Storm Sewer	LF
412.18	Directional Bore - 12" Storm Sewer	LF
412.19	Directional Bore - 14" Storm Sewer	LF
412.20	Directional Bore - 16" Storm Sewer	LF
412.21	Directional Bore - 18" Storm Sewer	LF
412.22	Directional Bore - 20" Storm Sewer	LF
412.23	Directional Bore - 22" Storm Sewer	LF
412.24	Directional Bore - 24" Storm Sewer	LF
412.25	Directional Bore - 26" Storm Sewer	LF
412.26	Directional Bore - 28" Storm Sewer	LF
412.27	Directional Bore - 30" Storm Sewer	LF
412.28	Directional Bore - 32" Storm Sewer	LF
412.29	Directional Bore - 34" Storm Sewer	LF
412.30	Directional Bore - 36" Storm Sewer	LF
412.31	Directional Bore - 42" Storm Sewer	LF
412.32	Directional Bore - 48" Storm Sewer	LF

414 - SANITARY SEWER PIPES AND LATERALS

414.01	Construct - 8" Sanitary Sewer	LF
414.02	Construct - 10" Sanitary Sewer	LF
414.03	Construct - 12" Sanitary Sewer	LF
414.04	Construct - 15" Sanitary Sewer	LF
414.05	Construct - 18" Sanitary Sewer	LF
414.06	Construct - 21" Sanitary Sewer	LF
414.07	Construct - 24" Sanitary Sewer	LF

ITEM #	DESCRIPTION	UNIT
414.08	Construct - 27" Sanitary Sewer	LF
414.09	Construct - 30" Sanitary Sewer	LF
414.10	Construct - 36" Sanitary Sewer	LF
414.11	Remove & Relay - 8" Sanitary Sewer	LF
414.12	Remove & Relay - 10" Sanitary Sewer	LF
414.13	Remove & Relay - 12" Sanitary Sewer	LF
414.14	Remove & Relay - 15" Sanitary Sewer	LF
414.15	Remove & Relay - 18" Sanitary Sewer	LF
414.16	Remove & Relay - 21" Sanitary Sewer	LF
414.17	Remove & Relay - 24" Sanitary Sewer	LF
414.18	Remove & Relay - 27" Sanitary Sewer	LF
414.19	Remove & Relay - 30" Sanitary Sewer	LF
414.20	Remove & Relay - 36" Sanitary Sewer	LF
414.21	Construct 4" Sanitary Lateral	LF
414.22	Construct 6" Sanitary Lateral	LF
414.23	Construct 8" Sanitary Lateral	LF
414.24	4" Sanitary Reconnect	EACH
414.25	4" Sanitary Reconnect	LF
414.26	6" Sanitary Reconnect	EACH
414.27	6" Sanitary Reconnect	LF
414.28	8" Sanitary Reconnect	EACH
414.29	8" Sanitary Reconnect	LF
414.30	4" Sanitary Riser	VF
414.31	6" Sanitary Riser	VF
414.32	5' - 8" Sanitary Spot Repair	EACH
414.33	10' - 8" Sanitary Spot Repair	EACH
414.34	15' - 8" Sanitary Spot Repair	EACH
414.35	20' - 8" Sanitary Spot Repair	EACH
414.36	5' - 10" Sanitary Spot Repair	EACH
414.37	10' - 10" Sanitary Spot Repair	EACH
414.38	15' - 10" Sanitary Spot Repair	EACH
414.39	20' - 10" Sanitary Spot Repair	EACH
414.40	5' - 12" Sanitary Spot Repair	EACH
414.41	10' - 12" Sanitary Spot Repair	EACH
414.42	15' - 12" Sanitary Spot Repair	EACH
414.43	20' - 12" Sanitary Spot Repair	EACH
414.44	5' - 15" Sanitary Spot Repair	EACH
414.45	10' - 15" Sanitary Spot Repair	EACH
414.46	15' - 15" Sanitary Spot Repair	EACH
414.47	20' - 15" Sanitary Spot Repair	EACH
414.48	5' - 18" Sanitary Spot Repair	EACH
414.49	10' - 18" Sanitary Spot Repair	EACH
414.50	15' - 18" Sanitary Spot Repair	EACH
414.51	20' - 18" Sanitary Spot Repair	EACH
414.52	Chemical Grout Sanitary Sewer	EACH

415 - STORM SEWER PIPES AND LATERALS

415.01	Construct - 8" Storm Sewer	LF
415.02	Construct - 10" Storm Sewer	LF
415.03	Construct - 12" Storm Sewer	LF
415.04	Construct - 15" Storm Sewer	LF
415.05	Construct - 18" Storm Sewer	LF
415.06	Construct - 21" Storm Sewer	LF
415.07	Construct - 24" Storm Sewer	LF
415.08	Construct - 27" Storm Sewer	LF

ITEM #	DESCRIPTION	UNIT
415.09	Construct - 30" Storm Sewer	LF
415.10	Construct - 36" Storm Sewer	LF
415.11	Construct - 42" Storm Sewer	LF
415.12	Construct - 48" Storm Sewer	LF
415.13	Construct - 54" Storm Sewer	LF
415.14	Construct - 60" Storm Sewer	LF
415.15	Construct - 66" Storm Sewer	LF
415.16	Construct - 72" Storm Sewer	LF
415.17	Construct - 84" Storm Sewer	LF
415.18	Construct 14" x 23" Elliptical	LF
415.19	Construct 19" x 23" Elliptical	LF
415.20	Construct 24" x 38" Elliptical	LF
415.21	Construct 29" x 45" Elliptical	LF
415.22	Construct 34" x 53" Elliptical	LF
415.23	Construct 38" x 60" Elliptical	LF
415.24	Construct 43" x 68" Elliptical	LF
415.25	Construct 48" x 76" Elliptical	LF
415.26	Construct 53" x 83" Elliptical	LF
415.27	Construct 58" x 91" Elliptical	LF
415.28	Construct 63" x 98" Elliptical	LF
415.29	Construct 68" x 106" Elliptical	LF
415.30	Construct - 6" Perforated Wrapped Underdrain	LF
415.31	Construct - 12" Storm Inlet Lead	LF
415.32	Construct - 15" Storm Inlet Lead	LF
415.33	Construct - 18" Storm Inlet Lead	LF
415.34	Construct 6" Storm Lateral	LF
415.35	Construct 12" Storm Lateral	LF
415.36	Remove & Relay - 8" Storm Sewer	LF
415.37	Remove & Relay - 10" Storm Sewer	LF
415.38	Remove & Relay - 12" Storm Sewer	LF
415.39	Remove & Relay - 15" Storm Sewer	LF
415.40	Remove & Relay - 18" Storm Sewer	LF
415.41	Remove & Relay - 21" Storm Sewer	LF
415.42	Remove & Relay - 24" Storm Sewer	LF
415.43	Remove & Relay - 27" Storm Sewer	LF
415.44	Remove & Relay - 30" Storm Sewer	LF
415.45	Remove & Relay - 36" Storm Sewer	LF
415.46	Remove & Relay - 42" Storm Sewer	LF
415.47	Remove & Relay - 48" Storm Sewer	LF
415.48	Remove & Relay - 54" Storm Sewer	LF
415.49	Remove & Relay - 60" Storm Sewer	LF
415.50	Remove & Relay - 66" Storm Sewer	LF
415.51	Remove & Relay - 72" Storm Sewer	LF
415.52	Remove & Relay - 84" Storm Sewer	LF
415.53	Remove & Relay 14" x 23" Elliptical	LF
415.54	Remove & Relay 19" x 23" Elliptical	LF
415.55	Remove & Relay 24" x 38" Elliptical	LF
415.56	Remove & Relay 29" x 45" Elliptical	LF
415.57	Remove & Relay 34" x 53" Elliptical	LF
415.58	Remove & Relay 38" x 60" Elliptical	LF
415.59	Remove & Relay 43" x 68" Elliptical	LF
415.60	Remove & Relay 48" x 76" Elliptical	LF
415.61	Remove & Relay 53" x 83" Elliptical	LF
415.62	Remove & Relay 58" x 91" Elliptical	LF
415.63	Remove & Relay 63" x 98" Elliptical	LF

ITEM #	DESCRIPTION	UNIT
415.64	Remove & Relay 68" x 106" Elliptical	LF
415.65	Remove & Relay - 12" Storm Inlet Lead	LF
415.66	Remove & Relay - 15" Storm Inlet Lead	LF
415.67	Remove & Relay - 18" Storm Inlet Lead	LF
415.68	Remove 8"/10" & Relay w/ 12" Inlet Lead	LF
415.69	6" Storm Reconnect	EACH
415.70	6" Storm Reconnect	LF
415.71	12" Storm Reconnect	EACH
415.72	12" Storm Reconnect	LF
415.73	6" Storm Riser	VF
415.74	12" Storm Riser	VF
415.75	5' - 12" Storm Spot Repair	EACH
415.76	10' - 12" Storm Spot Repair	EACH
415.77	15' - 12" Storm Spot Repair	EACH
415.78	20' - 12" Storm Spot Repair	EACH
415.79	5' - 15" Storm Spot Repair	EACH
415.80	10' - 15" Storm Spot Repair	EACH
415.81	15' - 15" Storm Spot Repair	EACH
415.82	20' - 15" Storm Spot Repair	EACH
415.83	5' - 18" Storm Spot Repair	EACH
415.84	10' - 18" Storm Spot Repair	EACH
415.85	15' - 18" Storm Spot Repair	EACH
415.86	20' - 18" Storm Spot Repair	EACH
415.87	5' - 21" Storm Spot Repair	EACH
415.88	10' - 21" Storm Spot Repair	EACH
415.89	15' - 21" Storm Spot Repair	EACH
415.90	20' - 21" Storm Spot Repair	EACH
415.91	5' - 24" Storm Spot Repair	EACH
415.92	10' - 24" Storm Spot Repair	EACH
415.93	15' - 24" Storm Spot Repair	EACH
415.94	20' - 24" Storm Spot Repair	EACH
415.95	5' - 27" Storm Spot Repair	EACH
415.96	10' - 27" Storm Spot Repair	EACH
415.97	15' - 27" Storm Spot Repair	EACH
415.98	20' - 27" Storm Spot Repair	EACH
415.99	5' - 30" Storm Spot Repair	EACH
415.100	10' - 30" Storm Spot Repair	EACH
415.101	15' - 30" Storm Spot Repair	EACH
415.102	20' - 30" Storm Spot Repair	EACH

416 - STORM SEWER TRASH GRATES

416.01	Trash Grate	EACH

418 - CULVERT PIPES

418.01	Culvert Pipe Class III, Corrugated Steel 12"	LF
418.02	Culvert Pipe Class III, Corrugated Steel 18"	LF
418.03	Culvert Pipe Class III, Corrugated Steel 24"	LF
418.04	Culvert Pipe Class III, Corrugated Steel 30"	LF
418.05	Culvert Pipe Class III, Corrugated Steel 36"	LF
418.06	Culvert Pipe Class III, Corrugated Steel 42"	LF
418.07	Culvert Pipe Class III, Corrugated Steel 48"	LF
418.08	Culvert Pipe Class III, Corrugated Steel 54"	LF
418.09	Culvert Pipe Class III, Corrugated Steel 60"	LF
418.10	Culvert Pipe Class III, Corrugated Steel 72"	LF
418.11	Apron Endwalls for Culvert Pipe Class III, Steel 12"	EACH

ITEM #	DESCRIPTION	UNIT
418.12	Apron Endwalls for Culvert Pipe Class III, Steel 18"	EACH
418.13	Apron Endwalls for Culvert Pipe Class III, Steel 24"	EACH
418.14	Apron Endwalls for Culvert Pipe Class III, Steel 30"	EACH
418.15	Apron Endwalls for Culvert Pipe Class III, Steel 36"	EACH
418.16	Apron Endwalls for Culvert Pipe Class III, Steel 42"	EACH
418.17	Apron Endwalls for Culvert Pipe Class III, Steel 48"	EACH
418.18	Apron Endwalls for Culvert Pipe Class III, Steel 54"	EACH
418.19	Apron Endwalls for Culvert Pipe Class III, Steel 60"	EACH
418.20	Apron Endwalls for Culvert Pipe Class III, Steel 72"	EACH
418.21	RCCP Class III, 12"	LF
418.22	RCCP Class III, 18"	LF
418.23	RCCP Class III, 24"	LF
418.24	RCCP Class III, 30"	LF
418.25	RCCP Class III, 36"	LF
418.26	RCCP Class III, 42"	LF
418.27	RCCP Class III, 48"	LF
418.28	RCCP Class III, 54"	LF
418.29	RCCP Class III, 60"	LF
418.30	RCCP Class III, 72"	LF
418.31	Apron Endwalls for RCCP Class III, 12"	EACH
418.32	Apron Endwalls for RCCP Class III, 18"	EACH
418.33	Apron Endwalls for RCCP Class III, 24"	EACH
418.34	Apron Endwalls for RCCP Class III, 30"	EACH
418.35	Apron Endwalls for RCCP Class III, 36"	EACH
418.36	Apron Endwalls for RCCP Class III, 42"	EACH
418.37	Apron Endwalls for RCCP Class III, 48"	EACH
418.38	Apron Endwalls for RCCP Class III, 54"	EACH
418.39	Apron Endwalls for RCCP Class III, 60"	EACH
418.40	Apron Endwalls for RCCP Class III, 72"	EACH
418.41	Elliptical RCCP Class HE-III (size)	LF
418.42	Elliptical Apron Endwall for RCCP (size)	EACH
418.43	Concrete Collar	EACH

419 - SEWER STRUCTURES

419.01	Construct Type A Sanitary Manhole	VF
419.02	Construct Type B Sanitary Manhole	VF
419.03	Construct Type C Sanitary Manhole	VF
419.04	Construct Type A Outside Drop Manhole	VF
419.05	Construct Type A Dual Outside Drop Manhole	VF
419.06	Construct Type B Outside Drop Manhole	VF
419.07	Construct Type B Dual Outside Drop Manhole	VF
419.08	Construct Type C Outside Drop Manhole	VF
419.09	Construct Type C Dual Outside Drop Manhole	VF
419.10	Construct Type A (48” Dia.) Storm Manhole	VF
419.11	Construct Type B (60” Dia.) Storm Manhole	VF
419.12	Construct Type C (72” Dia.) Storm Manhole	VF
419.13	Construct Type D (84” or 96” Dia.) Storm Manhole	VF
419.14	Construct Type E Storm Manhole	VF
419.15	Construct Standard Inlet	EACH
419.16	Construct Special Inlet	EACH
419.17	Construct Catch Basin	EACH
419.18	Construct Yard Drain	EACH
419.19	Remove & Rebuild Type A Sanitary Manhole	VF
419.20	Remove & Rebuild Type B Sanitary Manhole	VF
419.21	Remove & Rebuild Type C Sanitary Manhole	VF

ITEM #	DESCRIPTION	UNIT
419.22	Remove & Rebuild Type D Sanitary Manhole	VF
419.23	Remove & Rebuild Type A Storm Manhole	VF
419.24	Remove & Rebuild Type B Storm Manhole	VF
419.25	Remove & Rebuild Type C Storm Manhole	VF
419.26	Remove & Rebuild Type D Storm Manhole	VF
419.27	Remove & Rebuild Type E Storm Manhole	VF
419.28	Remove & Replace Type A Sanitary Manhole	VF
419.29	Remove & Replace Type B Sanitary Manhole	VF
419.30	Remove & Replace Type C Sanitary Manhole	VF
419.31	Remove & Replace Type D Sanitary Manhole	VF
419.32	Remove & Replace Type A Sanitary Manhole - Outside Drop	VF
419.33	Remove & Replace Type A Sanitary Manhole - Dual Outside Drop	VF
419.34	Remove & Replace Type A Storm Manhole	VF
419.35	Remove & Replace Type B Storm Manhole	VF
419.36	Remove & Replace Type C Storm Manhole	VF
419.37	Remove & Replace Type D Storm Manhole	VF
419.38	Remove & Replace Standard Inlet	EACH
419.39	Remove & Replace Special Inlet	EACH
419.40	Remove Standard & Replace w/ Special Inlet	EACH
419.41	Remove Catch Basin & Replace Standard Inlet	EACH
419.42	Remove Catch Basin & Replace Special Inlet	EACH
419.43	Reconstruct Type A Sanitary Manhole	VF
419.44	Reconstruct Type B Sanitary Manhole	VF
419.45	Reconstruct Type C Sanitary Manhole	VF
419.46	Reconstruct Type D Sanitary Manhole	VF
419.47	Reconstruct Type A Storm Manhole	VF
419.48	Reconstruct Type B Storm Manhole	VF
419.49	Reconstruct Type C Storm Manhole	VF
419.50	Reconstruct Type D Storm Manhole	VF
419.51	Reconstruct Type E Storm Manhole	VF
419.52	Reconstruct Drop	EACH
419.53	Supply & Place R-1500 Sanitary Casting & Cover	EACH
419.54	Supply & Place R-1510 Sanitary Casting & Cover	EACH
419.55	Supply & Place R-1689 Sanitary Casting & Cover	EACH
419.56	Supply & Place R-1916-D Sanitary Casting & Cover	EACH
419.57	Supply & Place R-1500 Storm Casting & Cover	EACH
419.58	Supply & Place R-1510 Storm Casting & Cover	EACH
419.59	Supply & Place R-1689 Storm Casting & Cover	EACH
419.60	Supply & Place R-3067 Storm Casting & Cover	EACH
419.61	Supply & Place R-3075 Storm Casting & Cover	EACH
419.62	Supply & Place R-3501-TR/TL Storm Casting & Cover	EACH
419.63	Chemical Grout Storm Sewer	EACH

420 - ADJUSTING MANHOLES AND INLETS

420.01	Adjust Manholes w/ Rubber Rings	EACH
420.02	Adjust Standard Inlets w/ Rubber Rings	EACH
420.03	Adjust Special Inlets w/ Rubber Rings	EACH
420.04	Adjust Manholes w/ Concrete Rings	EACH
420.05	Adjust Standard Inlets w/ Concrete Rings	EACH
420.06	Adjust Special Inlets w/ Concrete Rings	EACH

421 - MINI-STORM SEWERS

421.01	6" Mini-Storm Sewer with 3/4" CABC Bedding	LF
421.02	Mini-Storm Sewer Service Clean-Out	EACH
421.03	Reverse Mini-Storm Sewer Clean-Out	EACH

ITEM #	DESCRIPTION	UNIT
421.04	Remove & Salvage Existing Clean-Out	EACH
421.05	Construct Salvage Clean-Out	EACH
421.06	Frost Sleeve for Clean-Out	EACH
421.07	Sump Pump Connections from Right-of-Way to Mini-Storm Sewer	EACH

422 - MANHOLE REHABILITATION

422.01	Sanitary Manhole Rehabilitation	VF
422.02	Storm Manhole Rehabilitation	VF
422.03	Storm Inlet / Catch Basin Rehabilitation	VF
422.04	Sanitary Manhole Rehabilitation	EACH
422.05	Storm Manhole Rehabilitation	EACH
422.06	Storm Inlet / Catch Basin Rehabilitation	EACH

423 - CURED-IN-PLACE PIPE (CIPP)

423.01	Install 8" CIPP Sanitary Sewer	LF
423.02	Install 10" CIPP Sanitary Sewer	LF
423.03	Install 12" CIPP Sanitary Sewer	LF
423.04	Install 15" CIPP Sanitary Sewer	LF
423.05	Install 18" CIPP Sanitary Sewer	LF
423.06	Install 21" CIPP Sanitary Sewer	LF
423.07	Install 24" CIPP Sanitary Sewer	LF
423.08	Install 27" CIPP Sanitary Sewer	LF
423.09	Install 30" CIPP Sanitary Sewer	LF
423.10	Install 36" CIPP Sanitary Sewer	LF
423.11	Install (Size) CIPP Sanitary Sewer	LF
423.12	Install 12" CIPP Storm Sewer	LF
423.13	Install 15" CIPP Storm Sewer	LF
423.14	Install 18" CIPP Storm Sewer	LF
423.15	Install 21" CIPP Storm Sewer	LF
423.16	Install 24" CIPP Storm Sewer	LF
423.17	Install 27" CIPP Storm Sewer	LF
423.18	Install 30" CIPP Storm Sewer	LF
423.19	Install 36" CIPP Storm Sewer	LF
423.20	Install 42" CIPP Storm Sewer	LF
423.21	Install 48" CIPP Storm Sewer	LF
423.22	Install 54" CIPP Storm Sewer	LF
423.23	Install 60" CIPP Storm Sewer	LF
423.24	Install 72" CIPP Storm Sewer	LF
423.25	Install 84" CIPP Storm Sewer	LF
423.26	Install 96" CIPP Storm Sewer	LF
423.27	Install (Size) CIPP Storm Sewer	LF

502 - BORING AND JACKING - WATER

502.01	Mobilization & Demobilization for Boring	EACH
502.02	8” PVC Carrier in 20” Standard Casing	LF
502.03	8” PVC Carrier in 20” Extra Thick Casing	LF
502.04	12” PVC Carrier in 20” Standard Casing	LF
502.05	12” PVC Carrier in 20” Extra Thick Casing	LF
502.06	16” PVC Carrier in 24” Standard Casing	LF
502.07	16” PVC Carrier in 24” Extra Thick Casing	LF
502.08	20” DI Carrier in 30” Standard Casing	LF
502.09	20” DI Carrier in 30” Extra Thick Casing	LF
502.10	24” DI Carrier in 36” Standard Casing	LF

ITEM #	DESCRIPTION	UNIT
502.11	24” DI Carrier in 36” Extra Thick Casing	LF

503 - HORIZONTAL DIRECTIONAL DRILLING - WATER

503.01	8” PVC Water Main Installed by Directional Drilling	EACH
503.02	12” PVC Water Main Installed by Directional Drilling	EACH
503.03	16” PVC Water Main Installed by Directional Drilling	EACH

504 - WATER MAIN PIPE AND FITTINGS

504.01	4” PVC Water Main w/Natural Backfill	LF
504.02	4” PVC Water Main w/Gravel Backfill	LF
504.03	4” PVC Restrained Joint Water Main w/Natural Backfill	LF
504.04	4” PVC Restrained Joint Water Main w/Gravel Backfill	LF
504.05	6” PVC Water Main w/Natural Backfill	LF
504.06	6” PVC Water Main w/Gravel Backfill	LF
504.07	6” PVC Restrained Joint Water Main w/Natural Backfill	LF
504.08	6” PVC Restrained Joint Water Main w/Gravel Backfill	LF
504.09	8” PVC Water Main w/Natural Backfill	LF
504.10	8” PVC Water Main w/Gravel Backfill	LF
504.11	8” PVC Restrained Joint Water Main w/Natural Backfill	LF
504.12	8” PVC Restrained Joint Water Main w/Gravel Backfill	LF
504.13	10” PVC Water Main w/Natural Backfill	LF
504.14	10” PVC Water Main w/Gravel Backfill	LF
504.15	10” PVC Restrained Joint Water Main w/Natural Backfill	LF
504.16	10” PVC Restrained Joint Water Main w/Gravel Backfill	LF
504.17	12” PVC Water Main w/Natural Backfill	LF
504.18	12” PVC Water Main w/Gravel Backfill	LF
504.19	12” PVC Restrained Joint Water Main w/Natural Backfill	LF
504.20	12” PVC Restrained Joint Water Main w/Gravel Backfill	LF
504.21	16” PVC Water Main w/Natural Backfill	LF
504.22	16” PVC Water Main w/Gravel Backfill	LF
504.23	16” PVC Restrained Joint Water Main w/Natural Backfill	LF
504.24	16” PVC Restrained Joint Water Main w/Gravel Backfill	LF
504.25	4” DI Water Main w/Gravel Backfill	LF
504.26	4” DI Water Main w/Natural Backfill	LF
504.27	4” DI Restrained Joint Water Main w/Gravel Backfill	LF
504.28	4” DI Restrained Joint Water Main w/Natural Backfill	LF
504.29	6” DI Water Main w/Gravel Backfill	LF
504.30	6” DI Water Main w/Natural Backfill	LF
504.31	6” DI Restrained Joint Water Main w/Gravel Backfill	LF
504.32	6” DI Restrained Joint Water Main w/Natural Backfill	LF
504.33	8” DI Water Main w/Gravel Backfill	LF
504.34	8” DI Water Main w/Natural Backfill	LF
504.35	8” DI Restrained Joint Water Main w/Gravel Backfill	LF
504.36	8” DI Restrained Joint Water Main w/Natural Backfill	LF
504.37	10” DI Water Main w/Gravel Backfill	LF
504.38	10” DI Water Main w/Natural Backfill	LF
504.39	10” DI Restrained Joint Water Main w/Gravel Backfill	LF
504.40	10” DI Restrained Joint Water Main w/Natural Backfill	LF
504.41	12” DI Water Main w/Gravel Backfill	LF
504.42	12” DI Water Main w/Natural Backfill	LF
504.43	12” DI Restrained Joint Water Main w/Gravel Backfill	LF
504.44	12” DI Restrained Joint Water Main w/Natural Backfill	LF
504.45	16” DI Water Main w/Gravel Backfill	LF
504.46	16” DI Water Main w/Natural Backfill	LF
504.47	16” DI Restrained Joint Water Main w/Gravel Backfill	LF

ITEM #	DESCRIPTION	UNIT
504.48	16” DI Restrained Joint Water Main w/Natural Backfill	LF
504.49	20” DI w/Natural Backfill	LF
504.50	20” DI w/Gravel Backfill	LF
504.51	20” DI Restrained Joint Water Main w/Natural Backfill	LF
504.52	20” DI Restrained Joint Water Main w/Gravel Backfill	LF
504.53	24” DI w/Natural Backfill	LF
504.54	24” DI w/Gravel Backfill	LF
504.55	24” DI Restrained Joint Water Main w/Natural Backfill	LF
504.56	24” DI Restrained Joint Water Main w/Gravel Backfill	LF
504.57	4” 90º Bend	EACH
504.58	4” 45º Bend	EACH
504.59	4” 22º Bend	EACH
504.60	4” 11º Bend	EACH
504.61	4” x 4” Tee	EACH
504.62	4” x 4” Cross	EACH
504.63	4” x 3” Reducer	EACH
504.64	4” Solid Sleeve	EACH
504.65	4” Dual Sleeve	EACH
504.66	4” Plug	EACH
504.67	4” Cap	EACH
504.68	6” 90º Bend	EACH
504.69	6” 45º Bend	EACH
504.70	6” 22º Bend	EACH
504.71	6” 11º Bend	EACH
504.72	6” 5º Bend	EACH
504.73	6” x 6” Tee	EACH
504.74	6” x 4” Tee	EACH
504.75	6” x 6” Anchoring tee	EACH
504.76	6” x 6” Cross	EACH
504.77	6” x 4” Cross	EACH
504.78	6” x 4” Reducer	EACH
504.79	6” Solid Sleeve	EACH
504.80	6” Dual Sleeve	EACH
504.81	6” Plug	EACH
504.82	6” Cap	EACH
504.83	8” 90º Bend	EACH
504.84	8” 45º Bend	EACH
504.85	8” 22º Bend	EACH
504.86	8” 11º Bend	EACH
504.87	8” 5º Bend	EACH
504.88	8” x 8” Tee	EACH
504.89	8” x 6” Tee	EACH
504.90	8” x 4” Tee	EACH
504.91	8” x 6” Anchoring tee	EACH
504.92	8” x 8” Cross	EACH
504.93	8” x 6” Cross	EACH
504.94	8” x 4” Cross	EACH
504.95	8” x 6” Reducer	EACH
504.96	8” x 4” Reducer	EACH
504.97	8” Solid Sleeve	EACH
504.98	8” Dual Sleeve	EACH
504.99	8” Plug	EACH
504.100	8” Cap	EACH
504.101	10” 90º Bend	EACH
504.102	10” 45º Bend	EACH

ITEM #	DESCRIPTION	UNIT
504.103	10” 22º Bend	EACH
504.104	10” 11º Bend	EACH
504.105	10” 5º Bend	EACH
504.106	10” x 10” Tee	EACH
504.107	10” x 8” Tee	EACH
504.108	10” x 6” Tee	EACH
504.109	10” x 4” Tee	EACH
504.110	10” x 6” Anchoring tee	EACH
504.111	10” x 10” Cross	EACH
504.112	10” x 8” Cross	EACH
504.113	10” x 6” Cross	EACH
504.114	10” x 4” Cross	EACH
504.115	10” x 8” Reducer	EACH
504.116	10” x 6” Reducer	EACH
504.117	10” x 4” Reducer	EACH
504.118	10” Solid Sleeve	EACH
504.119	10” Dual Sleeve	EACH
504.120	10” Plug	EACH
504.121	10” Cap	EACH
504.122	12” 90º Bend	EACH
504.123	12” 45º Bend	EACH
504.124	12” 22º Bend	EACH
504.125	12” 11º Bend	EACH
504.126	12” 5º Bend	EACH
504.127	12” x 12” Tee	EACH
504.128	12” x 10” Tee	EACH
504.129	12” x 8” Tee	EACH
504.130	12” x 6” Tee	EACH
504.131	12” x 4” Tee	EACH
504.132	12” x 6” Anchoring Tee	EACH
504.133	12” x 12” Cross	EACH
504.134	12” x 10” Cross	EACH
504.135	12” x 8” Cross	EACH
504.136	12” x 6” Cross	EACH
504.137	12” x 4” Cross	EACH
504.138	12” x 10” Reducer	EACH
504.139	12” x 8” Reducer	EACH
504.140	12” x 6” Reducer	EACH
504.141	12” x 4” Reducer	EACH
504.142	12” Solid Sleeve	EACH
504.143	12” Dual Sleeve	EACH
504.144	12” Plug	EACH
504.145	12” Cap	EACH
504.146	16” 90º Bend	EACH
504.147	16” 45º Bend	EACH
504.148	16” 22º Bend	EACH
504.149	16” 11º Bend	EACH
504.150	16” x 16” Tee	EACH
504.151	16” x 12” Tee	EACH
504.152	16” x 10” Tee	EACH
504.153	16” x 8” Tee	EACH
504.154	16” x 6” Tee	EACH
504.155	16” x 6” Anchoring tee	EACH
504.156	16” x 16” Cross	EACH
504.157	16” x 12” Cross	EACH

ITEM #	DESCRIPTION	UNIT
504.158	16” x 10” Cross	EACH
504.159	16” x 8” Cross	EACH
504.160	16” x 6” Cross	EACH
504.161	16” x 12” Reducer	EACH
504.162	16” x 10” Reducer	EACH
504.163	16” x 8” Reducer	EACH
504.164	16” Solid Sleeve	EACH
504.165	16” Dual Sleeve	EACH
504.166	16” Plug	EACH
504.167	16” Cap	EACH
504.168	20” 90º Bend	EACH
504.169	20” 45º Bend	EACH
504.170	20” 22º Bend	EACH
504.171	20” 11º Bend	EACH
504.172	20” x 20” Tee	EACH
504.173	20” x 16” Tee	EACH
504.174	20” x 12” Tee	EACH
504.175	20” x 10” Tee	EACH
504.176	20” x 8” Tee	EACH
504.177	20” x 6” Tee	EACH
504.178	20” x 6” Anchoring Tee	EACH
504.179	20” x 20” Cross	EACH
504.180	20” x 16” Cross	EACH
504.181	20” x 12” Cross	EACH
504.182	20” x 10” Cross	EACH
504.183	20” x 8” Cross	EACH
504.184	20” x 6” Cross	EACH
504.185	20” x 16” Reducer	EACH
504.186	20” x 12” Reducer	EACH
504.187	20” x 10” Reducer	EACH
504.188	20” Solid Sleeve	EACH
504.189	20” Dual Sleeve	EACH
504.190	20” Plug	EACH
504.191	20” Cap	EACH
504.192	24” 90º Bend	EACH
504.193	24” 45º Bend	EACH
504.194	24” 22º Bend	EACH
504.195	24” 11º Bend	EACH
504.196	24” x 24” Tee	EACH
504.197	24” x 16” Tee	EACH
504.198	24” x 12” Tee	EACH
504.199	24” x 10” Tee	EACH
504.200	24” x 8” Tee	EACH
504.201	24” x 6” Tee	EACH
504.202	24” x 6” Anchoring Tee	EACH
504.203	24” x 16” Cross	EACH
504.204	24” x 12” Cross	EACH
504.205	24” x 10” Cross	EACH
504.206	24” x 8” Cross	EACH
504.207	24” x 6” Cross	EACH
504.208	24” x 16” Reducer	EACH
504.209	24” x 12” Reducer	EACH
504.210	24” Solid Sleeve	EACH
504.211	24” Dual Sleeve	EACH
504.212	24” Plug	EACH

ITEM #	DESCRIPTION	UNIT
504.213	24” Cap	EACH
504.214	Fluorocarbon Gasket – 4”	EACH
504.215	Fluorocarbon Gasket – 6”	EACH
504.216	Fluorocarbon Gasket – 8”	EACH
504.217	Fluorocarbon Gasket – 10”	EACH
504.218	Fluorocarbon Gasket – 12”	EACH
504.219	Fluorocarbon Gasket – 16”	EACH
504.220	Fluorocarbon Gasket – 20”	EACH
504.221	Fluorocarbon Gasket – 24”	EACH

505 - WATER MAIN VALVES AND BOXES

505.01	4” Gate Valve (_OR, _OL)	EACH
505.02	6” Gate Valve (_OR, _OL)	EACH
505.03	8” Gate Valve (_OR, _OL)	EACH
505.04	10” Gate Valve (_OR, _OL)	EACH
505.05	12” Gate Valve (_OR, _OL)	EACH
505.06	16” Butterfly Valve (_OR, _OL)	EACH
505.07	20” Butterfly Valve (_OR, _OL)	EACH
505.08	24” Butterfly Valve (_OR, _OL)	EACH

506 - TAPPING SLEEVES AND VALVES

506.01	6” x 4” Tapping Sleeve and 4” Valve (_OR, _OL)	EACH
506.02	6” x 6” Tapping Sleeve and 6” Valve (_OR, _OL)	EACH
506.03	8” x 4” Tapping Sleeve and 4” Valve (_OR, _OL)	EACH
506.04	8” x 6” Tapping Sleeve and 6” Valve (_OR, _OL)	EACH
506.05	8” x 8” Tapping Sleeve and 8” Valve (_OR, _OL)	EACH
506.06	10” x 4” Tapping Sleeve and 4” Valve (_OR, _OL)	EACH
506.07	10” x 6” Tapping Sleeve and 6” Valve (_OR, _OL)	EACH
506.08	10” x 8” Tapping Sleeve and 8” Valve (_OR, _OL)	EACH
506.09	10” x 10” Tapping Sleeve and 10” Valve (_OR, _OL)	EACH
506.10	12” x 4” Tapping Sleeve and 4” Valve (_OR, _OL)	EACH
506.11	12” x 6” Tapping Sleeve and 6” Valve (_OR, _OL)	EACH
506.12	12” x 8” Tapping Sleeve and 8” Valve (_OR, _OL)	EACH
506.13	12” x 12” Tapping Sleeve and 12” Valve (_OR, _OL)	EACH
506.14	16” x 4” Tapping Sleeve and 4” Valve (_OR, _OL)	EACH
506.15	16” x 6” Tapping Sleeve and 6” Valve (_OR, _OL)	EACH
506.16	16” x 8” Tapping Sleeve and 8” Valve (_OR, _OL)	EACH
506.17	16” x 12” Tapping Sleeve and 12” Valve (_OR, _OL)	EACH

507 - FIRE HYDRANTS

507.01	Fire Hydrant (_OR, _OL)	EACH
507.02	6” Fire Hydrant Branch	LF

508 - WATER SERVICES

508.01	¾” or 1” PE Water Service Transfer	LF
508.02	1½” PE Water Service Transfer	LF
508.03	2” PE Water Service Transfer	LF
508.04	1” New or Replaced PE Water Service	LF
508.05	1½” New or Replaced PE Water Service	LF
508.06	2” New or Replaced PE Water Service	LF

509 - PERMANENT AIR RELEASE ASSEMBLIES

509.01	1" Permanent Air Release Assembly	EACH

510 - TEMPORARY FLUSH PIPES

ITEM #	DESCRIPTION	UNIT
510.01	1" Temporary Flush Pipe	EACH
510.02	2" Temporary Flush Pipe	EACH

511 - FLUSH HYDRANT ASSEMBLIES

511.01	2" Flush Hydrant Assembly	EACH

512 - REMOTE WATER MAIN PLUGS

512.01	Remote Water Main Plug	EACH

513 - WATER MAIN CONSTRUCTION STAKING

513.01	Water Main Construction Staking	LF

601 - AGGREGATES & BASE

601.01	CABC, ¾"	TON
601.02	CABC, ¾"	CY
601.03	CABC, 1¼"	TON
601.04	CABC, 1¼"	CY
601.05	CABC, 3"	TON
601.06	CABC, 3"	CY
601.07	Shaping Shoulders	STA
601.08	Salvaged Asphaltic Pavement Base	TON
601.09	Salvaged Asphaltic Pavement Base	CY
601.10	Open Graded Base Course	TON
601.11	Open Graded Base Course	CY
601.12	Breaker Run	TON
601.13	Breaker Run	CY
601.14	Select Crushed Material	TON
601.15	Select Crushed Material	CY
601.16	Pit Run	TON
601.17	Pit Run	CY
601.18	Asphaltic Base	TON
601.19	6" Concrete Base	SY
601.20	7" Concrete Base	SY
601.21	8" Concrete Base	SY
601.22	6" Concrete Base HES	SY
601.23	7" Concrete Base HES	SY
601.24	8" Concrete Base HES	SY
601.25	6" Concrete Base SHES	SY
601.26	7" Concrete Base SHES	SY
601.27	8" Concrete Base SHES	SY
601.28	Pulverized Pavement	SY
601.29	Mill & Relay Pavement	SY
601.30	Rubblized Pavement	SY
601.31	Cracked & Seated Pavement	SY
601.32	Subbase	CY
601.33	Subbase	TON
601.34	Base Patching Asphaltic	TON
601.35	Base Patching Asphaltic	SY
601.36	Base Patching Concrete	TON
601.37	Base Patching Concrete	SY

602 - CONCRETE PAVEMENT

602.01	8" Concrete Pavement	SY
602.02	9" Concrete Pavement	SY
602.03	10" Concrete Pavement	SY

ITEM #	DESCRIPTION	UNIT
602.04	8" Concrete Pavement HES	SY
602.05	9" Concrete Pavement HES	SY
602.06	10" Concrete Pavement HES	SY
602.07	8" Concrete Pavement SHES	SY
602.08	9" Concrete Pavement SHES	SY
602.09	10" Concrete Pavement SHES	SY
602.10	8" Integral Concrete Pavement	SY
602.11	9" Integral Concrete Pavement	SY
602.12	10" Integral Concrete Pavement	SY
602.13	8" Integral Concrete Pavement HES	SY
602.14	9" Integral Concrete Pavement HES	SY
602.15	10" Integral Concrete Pavement HES	SY
602.16	8" Integral Concrete Pavement SHES	SY
602.17	9" Integral Concrete Pavement SHES	SY
602.18	10" Integral Concrete Pavement SHES	SY
602.19	Concrete Pavement Approach Slab	SY
602.20	Concrete Pavement Approach Slab HES	SY
602.21	6" Concrete Driveway	SY
602.22	8" Concrete Driveway	SY
602.23	6" Concrete Driveway HES	SY
602.24	8" Concrete Driveway HES	SY
602.25	Pavement Ties	EACH
602.26	Pavement Dowel Bars	EACH
602.27	Drilled Tie Bars	EACH
602.28	Drilled Dowel Bars	EACH
602.29	Pavement Gaps	EACH
602.30	Continuous Diamond Grinding	SY
602.31	Doweled Expansion Joints	LF
602.32	Reconstruct 6" Concrete Pavement	SY
602.33	Reconstruct 8" Concrete Pavement	SY
602.34	Reconstruct 9" Concrete Pavement	SY
602.35	Reconstruct 6" Concrete Pavement HES	SY
602.36	Reconstruct 8" Concrete Pavement HES	SY
602.37	Reconstruct 9" Concrete Pavement HES	SY
602.38	Reconstruct 8" Concrete Pavement SHES	SY
602.39	Reconstruct 9" Concrete Pavement SHES	SY
602.40	Reconstruct 6" Integral Concrete Pavement	SY
602.41	Reconstruct 8" Integral Concrete Pavement	SY
602.42	Reconstruct 9" Integral Concrete Pavement	SY
602.43	Reconstruct 6" Integral Concrete Pavement HES	SY
602.44	Reconstruct 8" Integral Concrete Pavement HES	SY
602.45	Reconstruct 9" Integral Concrete Pavement HES	SY
602.46	Reconstruct 6" Integral Concrete Pavement SHES	SY
602.47	Reconstruct 8" Integral Concrete Pavement SHES	SY
602.48	Reconstruct 9" Integral Concrete Pavement SHES	SY
602.49	Concrete Corrugated Median	SF
602.50	Concrete Median Nose	SF
602.51	Traffic Island	SF
602.52	Colored Concrete 4"	SF
602.53	Colored Concrete 5"	SF
602.54	Colored Concrete 6"	SF
602.55	Colored Concrete 8"	SF
602.56	Colored Concrete 9"	SF
602.57	Colored Concrete 10"	SF
602.58	Colored & Stamped Concrete 4"	SF
602.59	Colored & Stamped Concrete 5"	SF
602.60	Colored & Stamped Concrete 6"	SF

ITEM #	DESCRIPTION	UNIT
602.61	Reconstruct Colored Concrete 4"	SF
602.62	Reconstruct Colored Concrete 5"	SF
602.63	Reconstruct Colored Concrete 6"	SF
602.64	Reconstruct Colored Concrete 8"	SF
602.65	Reconstruct Colored Concrete 9"	SF
602.66	Reconstruct Colored Concrete 10"	SF
602.67	Reconstruct Colored & Stamped Concrete 4"	SF
602.68	Reconstruct Colored & Stamped Concrete 5"	SF
602.69	Reconstruct Colored & Stamped Concrete 6"	SF
602.70	Cold Weather Concrete Protection	SY

603 - CURB AND GUTTER

603.01	Curb & Gutter 18"	LF
603.02	Curb & Gutter 24"	LF
603.03	Curb & Gutter 30"	LF
603.04	Mountable Median Curb 18"	LF
603.05	Reconstruct Curb & Gutter 24"	LF
603.06	Reconstruct Curb & Gutter 30"	LF
603.07	Reconstruct Curb	LF
603.08	Concrete Surface Drain	EACH

604 - CONCRETE SIDEWALK & DRIVEWAY

604.01	4" Concrete Sidewalk	SF
604.02	5" Concrete Sidewalk	SF
604.03	6" Concrete Sidewalk and Driveway	SF
604.04	8" Concrete Sidewalk and Driveway	SF
604.05	6" Concrete Sidewalk and Driveway HES	SF
604.06	8" Concrete Sidewalk and Driveway HES	SF
604.07	Reconstruct 4" Concrete Sidewalk > 150 SF per block	SF
604.08	Reconstruct 4" Concrete Sidewalk < 150 SF per block	SF
604.09	Reconstruct 5" Concrete Sidewalk > 150 SF per block	SF
604.10	Reconstruct 5" Concrete Sidewalk < 150 SF per block	SF
604.11	Reconstruct 6" Concrete Sidewalk & Driveway	SF
604.12	Reconstruct 8" Concrete Sidewalk & Driveway	SF
604.13	Reconstruct 6" Concrete Sidewalk & Driveway HES	SF
604.14	Reconstruct 8" Concrete Sidewalk & Driveway HES	SF
604.15	Concrete Steps	SF
604.16	Sidewalk Curb Retaining Wall 6"	LF
604.17	Sidewalk Curb Retaining Wall > 9"	SF
604.18	4” X 4” Welded Wire Mesh Reinforcement	SF

605 - MUDJACKING

605.01	Mudjacking Curb & Gutter	LF
605.02	Mudjacking Pavement	SY
605.03	Mudjacking Sidewalk	SF
605.04	Mudjacking Driveway Aprons	SY

606 - VACANT

607 - JOINT AND CRACK SEALING

607.01	Joint & Crack Sealing	LF

608 - ASPHALTIC PAVEMENT

608.01	HMA Pavement Type 3LT 58-28 S	TON
608.02	HMA Pavement Type 4LT 58-28 S	TON

ITEM #	DESCRIPTION	UNIT
608.03	HMA Pavement Type 4LT 58-28 S	SY
608.04	HMA Pavement Type 5LT 58-28 S	TON
608.05	HMA Pavement 4LT 58-28 S, Patching	TON
608.06	HMA Pavement 4LT 58-28 S, Patching (Areas < 20 Tons per block & RR Crossings)	TON
608.07	HMA Pavement 4LT 58-28 S, Patching (Areas = or > 20 Tons per block)	TON
608.08	Tack Coat	GAL
608.09	Asphaltic Surface Patching	TON
608.10	Asphaltic Surface Patching Milling	SY
608.11	Asphaltic Surface Temporary	TON
608.12	Asphaltic Curb	LF
608.13	Asphaltic Flumes	SY
608.14	Seal Coat	TON
608.15	Salvaged Asphaltic Pavement	SY
608.16	Salvaged Asphaltic Pavement Milling	SY
608.17	Asphaltic Milling	SY
608.18	HMA Cold Weather Paving	TON

610 - ROADSIDE BARRIERS

610.01	Temporary Concrete Barrier	LF
610.02	Steel Plate Beam Guard Class A	LF
610.03	Steel Plate Beam Guard Class B	LF
610.04	Type 2 End Treatment	EACH
610.05	Energy Absorbing Terminal	EACH
610.06	Steel Thrie Beam Structure Approach	LF
610.07	Salvaging Beam Guard	LF

611 - DETECTABLE WARNING FIELDS

611.03	Curb Ramp Detectable Warning Field Cast Iron	SF

612 - GEOTEXTILE FABRICS

612.01	Geotextile Fabric Type SAS	SY
612.02	Geotextile Fabric Type MS	SY
612.03	Geotextile Fabric Type DF	SY
612.04	Geotextile Fabric Type SR	SY
612.05	Geotextile Fabric Type R	SY
612.06	Geotextile Fabric Type HR	SY
612.07	Geotextile Fabric Type C	SY
612.08	Geotextile Fabric Type ES	SY
612.09	Geogrid Type SR	SY
612.10	Geogrid Type MR	SY
612.11	Geogrid Type SSR	SY

613 - SAWING PAVEMENT

613.01	Sawing Asphaltic Pavement	LF
613.02	Sawing Concrete Pavement Full Depth	LF
613.03	Sawing Pavement Full Depth	LF

701 - ELECTRICAL CONDUIT

701.01	Conduit Non Metallic Schedule 40 3/4 inch	LF
701.02	Conduit Non Metallic Schedule 40 1 inch	LF
701.03	Conduit Non Metallic Schedule 40 1 1/4 inch	LF
701.04	Conduit Non Metallic Schedule 40 1 1/2 inch	LF
701.05	Conduit Non Metallic Schedule 40 2 inch	LF
701.06	Conduit Non Metallic Schedule 40 2 1/2 inch	LF

ITEM #	DESCRIPTION	UNIT
701.07	Conduit Non Metallic Schedule 40 3 inch	LF
701.08	Conduit Non Metallic Schedule 40 3 inch Dual	LF
701.09	Conduit Non Metallic Schedule 40 4 inch	LF
701.10	Loop Detector Conduit	LF
701.11	Loop Detector Slots	LF

702 - PULL BOXES AND JUNCTION BOXES

702.01	Pull Box 11x18x18-Inch Polymer Concrete Top & Sidewalls Furnish & Install	EACH
702.02	Pull Box 11x18x18-Inch Polymer Concrete Top & Sidewalls Install Only	EACH
702.03	Pull Box 13x24x18-Inch Polymer Concrete Top Fiberglass Sidewalls Furnish & Install	EACH
702.04	Pull Box 13x24-Inch x 18-Inch Polymer Concrete Top Fiberglass Sidewalls Install Only	EACH
702.05	Pull Box 17x30-Inch x 34-Inch Polymer Concrete Top Fiberglass Sidewalls Furnish & Install	EACH
702.06	Pull Box 17x30-Inch x 34-Inch Polymer Concrete Top Fiberglass Sidewalls Install Only	EACH
702.09	Pull Box 17x30-Inch x 24-Inch Polymer Concrete Top & Sidewalls Furnish & Install	EACH
702.10	Pull Box 17x30-Inch x 24-Inch Polymer Concrete Top & Sidewalls Install Only	EACH
702.07	Pull Box 24x36-Inch x 36-Inch Polymer Concrete Top Fiberglass Sidewalls Furnish & Install	EACH
702.08	Pull Box 24x36-Inch x 36-Inch Polymer Concrete Top Fiberglass Sidewalls Inch Only	EACH
702.11	Removing Pull Boxes	EACH

703 - CONCRETE BASES

703.01	T-1 Base	EACH
703.02	T-2 Base	EACH
703.03	T-3 Base	EACH
703.04	T-4 Base	EACH
703.05	T-5 Base	EACH
703.06	Deco Base	EACH
703.07	Removing T-1 Base	EACH
703.08	Removing T-2 Base	EACH
703.09	Removing T-3 Base	EACH
703.10	Removing T-4 Base	EACH
703.11	Removing T-5 Base	EACH
703.12	Removing Deco Base	EACH
703.13	Traffic Signal Ground Sleeve	EACH

704 - ELECTRICAL WIRING

704.01	Cable Traffic Signal 3-14 AWG	LF
704.02	Cable Traffic Signal 4-14 AWG	LF
704.03	Cable Traffic Signal 5-14 AWG	LF
704.04	Cable Traffic Signal 7-14 AWG	LF
704.05	Cable Traffic Signal 9-14 AWG	LF
704.06	Cable Traffic Signal 12-14 AWG	LF
704.07	Cable Traffic Signal 15-14 AWG	LF
704.08	Cable Traffic Signal 19-14 AWG	LF
704.09	Cable Traffic Signal 21-14 AWG	LF
704.10	Cable Type UF 2-12 AWG Grounded	LF
704.11	Cable Type UF 2-10 AWG Grounded	LF
704.12	Cable Type UF 2-8 AWG Grounded	LF
704.13	Electrical Wiring 14 AWG	LF
704.14	Electrical Wiring 12 AWG	LF
704.15	Electrical Wiring 10 AWG	LF
704.16	Electrical Wiring 8 AWG	LF
704.17	Electrical Wiring 6 AWG	LF
704.18	Electrical Wiring 4 AWG	LF
704.19	Loop Detector Lead in Cable	LF
704.20	Loop Detector Wire	LF

ITEM #	DESCRIPTION	UNIT
704.21	Traffic Signal EVP Detector Cable	LF

705 - ELECTRICAL SERVICE

705.01	Electrical Service Meter Breaker Pedestal	EACH
705.02	Street Light Underground Service	EACH

706 - POLES, ARMS, STANDARDS & BASES

706.01	Pedestal Bases	EACH
706.02	Transformer Bases	EACH
706.03	Traffic Signal Standards Aluminum 4 Feet	EACH
706.04	Traffic Signal Standards Aluminum 10 Feet	EACH
706.05	Traffic Signal Standards Aluminum 13 Feet	EACH
706.06	Traffic Signal Standards Aluminum 15 Feet	EACH
706.07	Pole Type 2 30 ft Black Single Side Mount 10 ft Streetlight Arm with Traffic Signals Furnish and Install	EACH
706.08	Pole Type 2 30 ft Black Single Side Mount 10 ft Streetlight Arm with Traffic Signals Install Only	EACH
706.09	Pole Type 3 30 ft Black Curved 25 ft Signal Arm 15 ft Camera Arm Furnish and Install	EACH
706.10	Pole Type 3 30 ft Black Curved 25 ft Signal Arm 15 ft Camera Arm Install Only	EACH
706.11	Pole Type 3 30 ft Black Curved 30 ft Signal Arm 15 ft Camera Arm Furnish and Install	EACH
706.12	Pole Type 3 30 ft Black Curved 30 ft Signal Arm 15 ft Camera Arm Install Only	EACH
706.13	Pole Type 3 20 ft Black Curved 25 ft Signal Arm Furnish and Install	EACH
706.14	Pole Type 3 20 ft Black Curved 25 ft Signal Arm Install Only	EACH
706.15	Pole Type 3 20 ft Black Curved 30 ft Signal Arm Furnish and Install	EACH
706.16	Pole Type 3 20 ft Black Curved 30 ft Signal Arm Install Only	EACH
706.17	Pole Type 3 20 ft Black Curved 35 ft Signal Arm Furnish and Install	EACH
706.18	Pole Type 3 20 ft Black Curved 35 ft Signal Arm Install Only	EACH
706.19	Pole Type 4 30 ft Black Curved 40 ft Signal Arm 15 ft Camera Arm Furnish and Install	EACH
706.20	Pole Type 4 30 ft Black Curved 40 ft Signal Arm 15 ft Camera Arm Install Only	EACH
706.21	Pole Type 4 30 ft Black Curved 45 ft Signal Arm 15 ft Camera Arm Furnish and Install	EACH
706.22	Pole Type 4 30 ft Black Curved 45 ft Signal Arm 15 ft Camera Arm Install Only	EACH
706.23	Pole Type 5 30 ft Black Curved 50 ft Signal Arm 15 ft Camera Arm Furnish and Install	EACH
706.24	Pole Type 5 30 ft Black Curved 50 ft Signal Arm 15 ft Camera Arm Install Only	EACH
706.25	Pole Type 5 30 ft Black Curved 55 ft Signal Arm 15 ft Camera Arm Furnish and Install	EACH
706.26	Pole Type 5 30 ft Black Curved 55 ft Signal Arm 15 ft Camera Arm Install Only	EACH
706.27	Removing Traffic Signals (Location)	EACH

707 - TRAFFIC SIGNALS

707.01	Traffic Signal Face 3S 12 Inch	EACH
707.02	Traffic Signal Face 4S 12 Inch	EACH
707.03	Traffic Signal Face 5S 12 Inch	EACH
707.04	Pedestrian Signal Face 12 Inch	EACH
707.05	Pedestrian Signal Face 16 Inch	EACH
707.06	Pedestrian Push Buttons	EACH
707.07	Programmable Traffic Signal Face 3S 12 Inch	EACH
707.08	Programmable Traffic Signal Face 4S 12 Inch	EACH
707.09	Programmable Traffic Signal Face 5S 12 Inch	EACH
707.10	Signal Mounting Hardware	LS
707.11	Emergency Vehicle Preemption (EVP) System	EACH
707.12	Vehicle Detection System TS-2 4-Camera Digital System	EACH
707.13	Actuated Traffic Controller	EACH

708 - LIGHTING

708.01	Street Light Fixture Roadway 12K Lumens Type 3	EACH
708.02	Street Light Fixture Roadway 9K Lumens Type 3	EACH
708.03	Street Light Fixture Roadway 9K Lumens Type 3 480 V	EACH
708.04	Street Light Photo Control 120 V	EACH

ITEM #	DESCRIPTION	UNIT
708.05	Street Light Photo Control 480 V	EACH
708.06	Street Light Fixture Ornamental Monroe 70 W Black	EACH
708.07	Street Light Fixture Ornamental Dousman 52 W Black	EACH

709 - TEMPORARY TRAFFIC SIGNAL

709.01	Temporary Traffic Signals (Location)	EACH

801 - TOPSOIL

801.01	Salvaged Topsoil	SY
801.02	Topsoil	SY
801.03	Topsoil	CY
801.04	Screened Topsoil	SY
801.05	Screened Topsoil	CY
801.06	Terrace Restoration	SY
801.07	Hauling Topsoil	CY
801.08	Imported Topsoil	CY

802 - MULCHING

802.01	Mulching	SY
802.02	Mulching	TON
802.03	Shredded Cedar Bark Mulch	CY

803 - FERTILIZER

803.01	Fertilizer, Type A	CWT
803.02	Fertilizer, Type B	CWT
803.03	Fertilizer, Type C	LB

804 - SEEDING

804.01	Seeding Mixture No. 5	LB
804.02	Seeding Mixture No. 10	LB
804.03	Seeding Mixture No. 20	LB
804.04	Seeding Mixture No. 30	LB
804.05	Seeding Mixture No. 40	LB
804.06	Seeding Mixture No. 60	LB
804.07	Seeding Mixture No. 70	LB
804.08	Seeding Mixture No. 70A	LB
804.09	Seeding Temporary	LB
804.10	Seeding Nurse Crop	LB

805 - SOD

805.01	Sod	SY

807 - FURNISHING & PLANTING PLANT MATERIALS

807.01A-Z	Trees (species & size)	EACH
807.02A-Z	Shrubs (species & size)	EACH
807.03A-Z	Vines (species & size)	EACH
807.04	Tree Pits	EACH

808 - FENCE

808.01	Woven Wire Fence (height)	LF
808.02	4' Chain Link Fence	LF
808.03	5' Chain Link Fence	LF
808.04	6' Chain Link Fence	LF

ITEM #	DESCRIPTION	UNIT
808.05	7' Chain Link Fence	LF
808.06	8' Chain Link Fence	LF
808.07	10' Chain Link Fence	LF
808.08	Gates Chain Link (width)	EACH
808.09	Salvaged 4' Chain Link Fence	LF
808.10	Salvaged 5' Chain Link Fence	LF
808.11	Salvaged 6' Chain Link Fence	LF
808.12	Salvaged 7' Chain Link Fence	LF
808.13	Salvaged 8' Chain Link Fence	LF
808.14	Salvaged 10' Chain Link Fence	LF
808.15	Split Rail Wood Fence	LF
808.16	Flat Panel Wood Fence	LF
808.17	Ornamental PVC Fence	LF

809 - BRICK PAVERS

809.01	Brick Pavers	SF
809.02	Remove & Relay Brick Pavers	SF
809.03	Remove & Salvage Brick Pavers	SF

810 - SPLIT BLOCK RETAINING WALL

810.01	Split Block Retaining Wall	SF

Page Intentionally Left Blank

DIVISION 1

GENERAL

SECTION 101

DEFINITIONS AND TERMS

101.1 General

Whenever in the specifications, or in any documents or instruments in construction operations where the specifications govern, the following abbreviations, terms, or pronouns in place of them are used, the intent and meaning shall be interpreted as follows:

101.2 Abbreviations

AASHTO	American Association of State Highway and Transportation Officials
ACI	American Concrete Institute
AIA	American Institute of Architects
AISC	American Institute of Steel Construction
ANSI	American National Standards Institute
ASCE	American Society of Civil Engineers
ASTM	American Society of Testing and Materials
AWS	American Welding Society
AWWA	American Water Works Association
CRSI	Concrete Reinforcing Steel Institute
EPA	Environmental Protection Agency
FHWA	Federal Highway Administration
IEEE	Institute of Electrical and Electronic Engineers
MUTCD	Manual of Uniform Traffic Control Devices
NEC	National Electrical Code
NEMA	National Electrical Manufacturers Association
OSHA	Federal Occupational Safety and Health Administration

PCI	Precast Concrete Institute
SSPC	Steel Structures Painting Council
UL	Underwriters Laboratory
WDNR	Wisconsin Department of Natural Resources
WisDOT	Wisconsin Department of Transportation

101.3 Definitions

ADDENDA: All revisions of and supplements to the plans and specifications issued prior to the opening of bid proposals and incorporated in or attached to and becoming an integral part of the Contract Documents.

ADDENDUM TO THE STANDARDS SPECIFICATIONS: Specification adopted subsequent to the publication of these Specifications, which modify, supplement, or otherwise depart from these Specifications.

AWARD: The acceptance of a bid by the formal approval of the City.

BID DEPOSIT: The security furnished with the bid to guarantee that the bidder will enter into the Contract if their bid is accepted.

BIDDER: Any individual, firm, partnership, or corporation, or a combination of any or all, jointly submitting a proposal for the work contemplated, acting directly or through a duly authorized representative.

CALENDAR DAY: Every day shown on the calendar, Sundays and holidays included.

CITY: The City of Green Bay, a municipal corporation, organized and existing under and by virtue of the laws of the State of Wisconsin and situated in the County of Brown and State of Wisconsin.

CERTIFICATION OF COMPLIANCE: A current certification, provided by a manufacturer, producer, or supplier of product, that the product as furnished to the Contractor complies with the pertinent specifications or contract requirements.

CERTIFIED REPORT OF TEST OR ANALYSIS: A current test report, provided by a laboratory, or by a product manufacturer, producer or suppler, indicating actual results of tests or analysis, covering elements of the specification requirements and validated by certification.

CONTRACT CHANGE ORDER: A written order, authorization, or agreement executed between the Contractor and the City covering work not otherwise provided for, revision in or amendments to the Contract, or conditions specifically prescribed in the specifications as requiring contract change orders. Such document becomes a part of the Contract when executed by the contracting parties.

CONTRACT DOCUMENTS: All the integral documents of the Contract comprised of (a) written agreement (Contract) covering the performance of the work and furnishings of materials for the construction of the work; (b) Notice to Contractors; (c) Instruction to Bidders; (d) Proposal; (e) Bid Bond; (f) Performance Bond; (g) Payment Bond; (h) Plans; (i) Specifications; (j) Special Provisions; (k) supplemental agreements; and (l) all addenda, as fully as though they had been set forth therein full in the body of the Contract.

CONTRACTOR: Any individual, firm, partnership, or corporation, or a combination of any or all, jointly submitting a proposal to whom the Contract awarded by the City or its heirs, executors, administrators, successors, or assigns.

CONTRACT TIME: The time allowed the Contractor to complete all work under the Contract including cleaning of the work site that will be specified in the Contract Documents. This time will be specified either as number of working days allowed, number of calendars days allowed, specific calendar date, or a combination of these when a specific portion of the work is to be completed by a specific date.

ENGINEER: The Director of Public Works and/or the General Manager of the Green Bay Water Utility and their authorized representatives.

EQUIPMENT: All machinery, equipment, tools, and apparatus, together with necessary supplies for upkeep, operation, and maintenance necessary for the proper construction and acceptable completion of the work.

HIGHWAY, STREET, OR ROAD: A general term denoting a public roadway for the purpose of vehicular travel, including the entire area within the right-of-way.

IMPROVEMENT AND SERVICE COMMITTEE: The persons performing the duties of the Improvement and Service Committee for the City of Green Bay, Wisconsin as defined under Green Bay Municipal Code.

INSPECTOR: The authorized representative of the Engineer assigned to make detailed inspection of any or all portions of the work or materials thereof.

MATERIALS: Any substance specified for use in the construction of the project and its appurtenances.

NOTICE TO CONTRACTORS: The official notice inviting bids for all proposed improvements included in any one letting.

NOTICE TO PROCEED: A written notice to the Contractor by the Engineer of the time within which the Contractor shall begin the prosecution of work.

OWNER: The City of Green Bay (City) with whom the Contractor has entered into the agreement and for whom the work is to be provided.

PERFORMANCE AND PAYMENT BOND: The approved form of security executed by the Contractor and the Contractor's surety or sureties guaranteeing the faithful performance of the Contract and the payment of all claims for work or labor performed and materials furnished for or about the work under the Contract. The surety may be in the form of either a single bond or separate as provided for in the contract documents.

PLANS: The approved plans, profiles, typical cross sections, working drawings, and supplemental drawings, or exact reproduction thereof, which show the location, character, dimensions, and details of the work to be done.

PROJECT: The specific construction to be performed under the Contract.

PROJECT SITE: The location of the construction to be performed under the Contract.

PROPOSAL: The written offer of the bidder, submitted on the prescribed proposal form, to perform the work including the furnishing of labor and materials at the prices quoted by the bidder.

SCHEDULE OF UNIT PRICES: The fixed unit prices as listed in the Contract Documents.

SHOP DRAWINGS: All drawings, diagrams, and illustrations, such as stress sheets, erection plans, falsework plans, framework plans, cofferdam plans, bending diagrams for reinforcing steel, or similar data prepared by the Contractor, or by a subcontractor, manufacturer, fabricator, or supplier, which the Contractor is required to submit to the Engineer for approval.

SPECIAL PROVISIONS: Specifications adopted subsequent to the publication of these specifications that modify, supplement or otherwise depart from these specifications.

SPECIFICATIONS: The directions, provisions, and requirements contained herein, or in supplements thereto, together with written agreements and all documents of any description, made or to be made, pertaining to the method or manner of performing the work, the quantities, and the quality of materials to be furnished under the Contract.

STANDARD SPECIFICATIONS: This bound document entitled "City of Green Bay Standard Specifications and Construction Standards for Public Works Construction", together with all supplements and addenda thereto.

SUBCONTRACTOR: Any individual, firm, partnership, joint venture, or corporation to whom the Contractor, with written consent of the Engineer, sublets any part of the contract.

SUPPLEMENTAL SPECIFICATIONS: Specifications adopted subsequent to the publication of these Specifications.

SURETY: The approved surety corporation licensed to do business in the State of Wisconsin bound with and for the Contractor to insure their acceptable performance of the Contract and for payment of all obligations under the Contract.

WisDOT SPECIFICATIONS: Wisconsin Department of Transportation Standard Specifications for Highway and Structure Construction, current edition, and all supplements and addenda thereto.

WORK: Work shall be understood to mean the furnishing of all labor, materials, equipment, and other incidentals necessary or convenient in the successful completion of the project or particular part of the project in accordance with the requirement of the Contract.

WORKING DAY: A calendar day, except Saturdays, Sundays, and nationally recognized legal holidays, where, in the opinion of the Engineer, weather and other conditions not under the control of the Contractor will permit construction operations to proceed with the normal working force engaged in performing the controlling item of work which would be in progress at this time. Working days will be counted in the half-day increment.

Page Intentionally Left Blank

SECTION 102

BIDDING REQUIREMENTS AND CONDITIONS

102.1 Public Works Bidding

The work shall be let in accordance with the following sections of the Wisconsin State Statutes:

A. Section 62.15 regarding public works construction.

B. Section 779.15 regarding lien on contractors.

C. Section 66.0903 regarding municipal wage rates.

D. Section 66.0901(2) regarding bidder's proof of responsibility.

102.2 Prequalification of Bidders

In accordance with Wisconsin Statutes 66.0901(2) and (3), all bidders must submit to the Director of Public Works proof of responsibility on the form furnished by the Director of Public Works not less than five (5) days prior to the date and time set for the opening of bids.

Whenever the Improvement and Service Committee is not satisfied with the sufficiency of the answers in the form, it may reject said bid, or disregard the same.

Bidders who are found to be prequalified shall remain so for a period of one year from the date of approval. The Engineer may require a special prequalification for particular projects and/or may require additional information regarding a bidder's prequalification to perform certain aspects of the work.

102.3 Disqualification of Bidders

Any one or more of the following causes may be considered as sufficient for rejection of the bid or bids and disqualification of the bidder from further bidding for such periods of time as shall be determined by the Improvement and Service Committee.

A. Developments subsequent to establishment of bidder's competence and qualifications which, in the opinion of the Improvement and Service Committee, would reasonably be construed as affecting the responsibility of the bidder.

B. Conviction of a violation of a State or Federal law or regulation, or rule or regulation of a Federal department, board or bureau, relating to or reflecting on the competency of the bidder for performing construction work.

C. More than one proposal for the same work from an individual, partnership, or corporation under the same or different names.

D. Evidence of collusion among bidders.

E. Lack of responsibility as shown by past work for the City.

F. Noncompliance with terms of previous or existing contracts.

G. Uncompleted work which, in the judgment of the Improvement and Service Committee, might hinder or prevent the prompt completion of additional work if awarded.

H. Uncompleted work on which the actual time used has exceeded the contract time set therefore, or on which work the performance or progress is not satisfactory in the judgment of the Improvement and Service Committee.

In accordance with Section 9.16, Green Bay Municipal Codes of Ordinances, any corporation, firm, or individual violating Chapter 133.01, Wisconsin Statutes, or any subsequent amendment thereof, shall upon conviction thereof be thereby disqualified as a bidder on any City project for a period of three (3) years from the date of such convictions; however, nothing herein shall be interpreted to preclude such corporation, firm, or individual from completing any and all contracts they may already have with the City at the time of such conviction. This prohibition applies with like force to officers of convicted corporations, firms, or individuals who thereafter have business interests in new corporations or business enterprises of whatever kind or description.

102.4 No Other Interested Parties

The bidder declares that the only persons interested in this Contract as principals are therein named as such; that no official of the City and no person acting for or employed by the City is directly or indirectly interested in this bid, or in any Contract that may be made under it, or any expected profit to arise there from; and that the Contractor's bid is made in good faith, without fraud, collusion or connection with any other persons bidding for the same work.

102.5 Proposal

The bidder shall submit their proposal on the form furnished by the City. The proposal shall be executed properly, and shall clearly specify a unit price in dollars and cents for each item listed therein, and shall also show in numerals in the spaces provided for that purpose the products of the respective unit price and quantities, and the total amount of the bid obtained by adding the amounts of all bid items. No bid will be accepted that does not contain an adequate or reasonable price for each and every item named in the Schedule of Unit Prices.

In case of conflict between a unit bid price and the corresponding extended amount, or in the absence of an extended amount, the unit bid price shall govern.

All writing shall be in nonerasable ink or typewritten, except the signature of the bidder, which shall be written with nonerasable ink.

All papers bound with or attached to the proposal form are considered a part thereof and must not be detached or altered when the proposal is submitted. The plans, specifications and other documents designated in the proposal form will be considered a part of the proposal whether attached or not.

102.6 List of Subcontractors

Section 66.0901(7), Wis. Statutes, provides that a bidder, as part of the proposal, shall submit a list of Subcontractors proposed to be used on the contract with and the class of work to be performed by, provided that to qualify for such listing each Subcontractor must first submit their bid in writing to the general contractor at least 48 hours prior to the time of the bid closing. It further provides that a proposal of a bidder shall not be invalid if any subcontractor, and the class of work to be performed by such subcontractor, has been omitted from the proposal.

No subcontract, whether listed or later proposed, may be entered into without the written consent of the Engineer as provided in Subsection 107.1 of the Standard Specifications.

102.7 Disclosure of Ownership

The bidder shall complete and submit as part of their bid the “Disclosure of Ownership” form contained in the proposal if they meet the requirements in Subsection 66.0903(12) (d), Wisconsin Statutes.

102.8 Bid Deposit

No proposal shall be considered unless accompanied by a bid deposit of the character and amount described in the Notice to Contractors.

The City will return the bid deposit of unsuccessful bidders following the award of the Contract by the Common Council. The bid deposit for the successful bidder will be returned following execution of the Contract and bonds as described in Section 103 of the Standard Specifications.

102.9 Delivery of Proposal

The proposal shall be delivered in a sealed envelope and clearly marked "Proposal for _____" indicating contract or project name, the base bid or part for which the bid is being submitted, and addressed to the "Improvement and Service Committee, Green Bay, Wisconsin". When sent by mail, the sealed proposal as indicated above shall be enclosed in an additional envelope.

Proposals sent by mail, submitted in person or otherwise delivered must be in the hands of the official conducting the letting by the hour and date designated in the Notice to Contractor. Proposals received after the time designated will be returned to the bidder unopened.

102.10 Withdrawal of Proposal

All proposals filed with the City will be kept secure and unopened and will not be allowed to pass out of the custody of a representative for the City, except on written request of the bidder or the bidder's authorized representative made prior to the time set for receipt of proposals, and if such withdrawal is made, such prospective bidder shall not be entitled to bid on the Contract at hand unless the same is re-advertised and proposals are again requested upon such advertisement.

No bid shall be withdrawn after the opening of the bids without the consent of the City for a period of sixty (60) days after the bid opening.

102.11 Rejection of Proposal

Proposals may be rejected if they show any alterations of form, additions or amendments not called for, conditional or alternate bids unless called for, incomplete bids, erasures, or irregularities of any kind. Proposals in which the unit prices for some items are out of proportion to the prices for other items, or proposals in which unit prices are not submitted for each item of work listed may be rejected.

The Improvement and Service Committee reserves the right to reject the bid of any person or firm who, in its opinion, has not had sufficient experience in the type of construction on which they are bidding or who is not provided with the necessary capital, machinery, and supervisory personnel to execute the work to be contracted for to the satisfaction of the said Committee.

The City reserves the right to reject any or all proposals, to waive technicalities, to re-advertise for bids, or to proceed to do the work otherwise, if in the judgment of the Improvement and Service Committee, the best interest of the City will be served thereby.

102.12 Examination of Plans, Specifications, Special Provisions, and Site of Work

The bidder is required to examine carefully the work site, the proposal form, plans, specifications, supplemental specifications, special provisions and contract forms for the work contemplated. It will be assumed that the bidder has investigated and is satisfied as to the conditions to be encountered for performing the work as scheduled, and as to the character, quality and quantities of work to be performed and materials to be furnished, and as to the requirements of the plans, specifications, supplemental specifications, special provisions and contract.

The submission of the proposal shall be considered conclusive evidence that the bidder has made such examination and is satisfied as to all the conditions and contingencies.

When the plans or special provisions contain information relative to subsurface exploration, locations of underground structures, borings, soundings, water levels, elevations, profiles, or other investigations, such information represents only the best knowledge of the Engineer and was obtained for design and estimating purposes only. It is made available to the bidder to provide them with the same information available to the Engineer, and is not intended as a substitute for personal investigation, interpretation, and judgment of the bidder.

The City has endeavored to determine the location of existing utilities in the area of the work and so indicate on the appropriate drawings. The City makes no warranty as to the accuracy or completeness of such representations. It is understood and agreed that the cost of performing work in the vicinity of existing utilities is included in the bid price.

102.13 Interpretation of Contract Documents

All questions about the meanings or intent of the Contract Documents shall be submitted to the Engineer in writing. Replies will be issued by addendum mailed or delivered to all parties recorded by the Engineer as having received the Contract Documents. Only questions answered by formal written addendum shall be binding. Oral and other interpretations or clarifications shall be without legal effect.

In order to guarantee a response, questions shall be submitted no later than four (4) calendar days prior to the bid opening date. Engineer shall attempt to address questions up to twenty-four (24) hours prior to the bid opening, but shall not guarantee such a response. No questions submitted less than twenty-four (24) hours prior to the bid opening shall be addressed.

102.14 Verbal Information Invalid

Any verbal information obtained from or statement made by an employee, agent, or consultant of the City at the time of the examination of the Contract Documents or the site for the purpose of bidding, which apparently corrects or in any way amends the Contract Documents, shall be invalid. The City shall not be responsible for such verbal information or statements. Only such corrections or amendments to the Contract Documents issued to all bidders as formal addenda shall become a part of the Contract. If any person contemplating the submission of a bid for the proposed Contract is in doubt as to the true meaning of any part of the plans, specifications, or other Contract Documents, the Contractor may submit to the Engineer a written request for an interpretation thereof.

102.15 Estimate of Quantities

An estimate of the quantity of work to be performed under the Contract is stipulated in the proposal. The quantities of work may be considered as approximate and for comparison of bids only. The City does not guarantee nor imply that the actual quantities involved in the work will correspond exactly therewith and shall not be liable for any misunderstanding as to the exact quantities, location, or conditions pertaining to the work. No adjustment in the contract unit prices will be made due to any variance between bid quantities and the actual measured quantities.

Page Intentionally Left Blank

SECTION 103

AWARD AND EXECUTION OF THE CONTRACT

103.1 Consideration of Proposals

The proposals received will be compared on the basis of the summation of the products of the quantities of work listed and the contract unit prices offered. In case of discrepancy between the gross sum shown in the proposal and that obtained by adding the product of the quantities of work and the unit prices, the unit prices shall govern and any errors found in said products and summation shall be corrected.

103.2 Award of Contract

The Contract shall be deemed as having been awarded when notice of the Common Council's action thereon shall have been duly delivered to the successful bidder. As each part of the proposal may constitute the improvement of separate streets, project sites, or parts, the work outlined in the proposal may be awarded as a whole or in part or parts, according to the best interests of the City.

103.3 Execution of Contract and Bond

Within ten (10) days after notification of award, the Contractor shall contact the City Clerk and properly execute, on the forms provided, the Contract and the Performance and Payment Bond.

103.4 Failure to Execute Contract

Failure on the part of the successful bidder to execute the Contract and acceptable Performance and Payment Bond within ten (10) days after the date of Notice of Award of the Contract will, at the discretion of the Improvement and Service Committee, be just cause for the annulment of the award and forfeiture of the Bid Deposit to the City.

103.5 Performance and Payment Bond

The Contractor shall file with the City, within ten (10) calendar days after the written Notice of Award, a Payment and Performance Bond on the prescribed form in the full amount of the contract price as security for the payment of all persons supplying labor, services, and materials for the execution of the work and the faithful performance of the Contract. The bond shall remain in effect for a period of one year after the date of final acceptance of the work by the City. The surety furnishing this bond shall have a sound financial standing, a record of service satisfactory to the City, and shall be authorized to do business in the State of Wisconsin.

Page Intentionally Left Blank

SECTION 104

SCOPE OF WORK

104.1 Intent of Contract Documents

The intent of the Contract Documents is to provide for the construction, execution, and completion in every detail of a complete work or improvement which the Contractor undertakes to perform in full compliance with the Contract Documents and in accordance with recognized engineering and construction principles. The Contractor shall perform all items of work covered and stipulated in the proposal and all other altered or extra work in accordance with the lines, grades, typical sections, and dimensions furnished and shall furnish, unless otherwise provided, all materials, tools, equipment, supplies, transportation, and labor necessary for the production and completion of the work in the most expeditious and workmanlike manner. If the Contractor does not fully understand the plans and specifications or the intent concerning any part of the work, the Contractor shall make the necessary inquiries of the Engineer before bidding. Such interpretation shall be given in writing as an addendum and shall be furnished to all contractors.

The Contract Documents are complimentary, and what is called for by any one shall be as binding as if called for by all. Materials or work described in words, which so applied, have a well-known technical or trade meaning shall be held to refer to such recognized standards.

104.2 Lands for Work

The City shall provide the lands upon which the work under this Contract is to be performed except that the Contractor shall provide land required for the erection of temporary construction facilities and storage of material, together with right of access to same. The Contractor shall provide a copy of all land use and access agreements to the Engineer.

Whenever the work is to be performed through private property for which the City has obtained a license or agreement, the Contractor shall abide fully with the terms of the license or the easement and shall confine work to the area covered under the license or agreement. A copy of the license or agreement will be on file in the office of the Department of Public Works – Engineering Division.

104.3 Interference with Utilities

The Contractor shall meet the requirements of Wisconsin Statute 66.0831. Whenever any mains, conduits, or services are encountered in the line and grade of the work, which, in the opinion of the Engineer, require relocation or removal, they will be relocated or removed by the owner of said utilities.

Every effort has been made by the City to show underground utilities on the plan; this shall not relieve in any degree the Contractor's responsibility or obligation with regard to utilities not shown on plans. It is the responsibility of the Contractor to acquaint themselves with the location of all underground structures furnished, shown on the plans, or given on the project site. No extra compensation will be paid for unavoidable delays caused by the interference of existing underground structures.

For City owned Park property, Contractor to coordinate with the City of Green Bay Park Superintendent, 920-448-3365, for assistance in locating private utilities. The contractor shall give three (3) working days' notice to allow scheduling, unless otherwise stated in contract documents.

104.4 Items Not Listed in "Estimate of Quantities"

Sundry items which are incidental to or required in the construction of the work but are not included as items in the estimate of quantities shall be considered an integral part of the Contract and labor, materials, etc. required for such items shall be furnished by the Contractor and the cost of same included in the unit prices bid.

104.5 Omissions, Discrepancies, and Corrections

It is the intent of the Contract Documents that all work performed under the Contract shall be in accordance with best construction practices. The Contractor shall carefully check the plans both before commencing work and throughout the progress of the work. The Contractor shall immediately call the Engineer's attention to any errors, omissions or discrepancies that they may discover in the plans before proceeding with the work affected. The Contractor shall take no advantage of any error or omissions in the Contract Documents. The City reserves the right to make such corrections and interpretations as may be deemed necessary for the fulfillment of the true intent of the Contract Documents.

104.6 Modifications

The Contractor shall modify the work whenever so ordered by the Engineer and such modifications shall not affect the validity of the Contract. Modifications may involve increases or decreases in the amount of the work for which appropriate contract price adjustments will be made.

Except for minor changes which involve no contract price adjustment and with the exception of adjustments of estimated quantities for unit price work or materials to conform to actual pay quantities, all modifications shall be made under the authority of duly executed Change Orders.

The City reserves the right to omit any items in the proposal from the work and shall not be liable for any damage due to the loss of earnings for said omission and it shall not be a waiver of any conditions of the Contract Documents.

104.7 Authority for Modified Work

No modification in the work under the Contract shall be made without a written order from the Engineer. No verbal suggestion or order of any employee of the Department of Public Works or any other person shall be construed as authorizing any claims on the part of the Contractor for extra compensation for labor, materials, or other items pertaining to such work or for damages or any other expense because of the Contractor's compliance therewith.

Verbal orders and suggestions as to the performance of the work may be given from time to time by employee of the Department of Public Works but when, in the opinion of the Contractor, such orders or suggestions involve extra work for which should receive added compensation, the

Contractor must request a written order from the Engineer authorizing such work. In the event of any disagreement as to the amount of work involved under any authorized order for extra work, it is hereby agreed by all parties hereto that the decision of the Engineer shall be binding and conclusive.

104.8 Increased or Decreased Quantities

It is agreed and understood that the quantities of any items of work, shown on the plans or in the proposal, are subject to increase or decrease during the progress of the work. The Engineer reserves the right to increase or decrease the quantities of any items of work, including increase or decrease of quantities by alteration of plans, as may be considered necessary or desirable during the progress of the work to satisfactorily complete the construction. Such increases or decreases shall not be considered as a waiver of any conditions of the contract nor invalidate any of the provisions thereof.

104.9 Extra Work

If a modification increases the amount of the work, and the added work or any part thereof is of a type and character which can properly and fairly be classified under one or more unit price items of the Proposal, then the added work or part thereof shall be paid for according to the amount actually done and at the applicable unit price. Otherwise, such work shall be paid for as hereinafter provided.

Claims for extra work will not be paid unless the Engineer authorizes the work covered by such claims in writing. The Contractor shall not have the right to prosecute or maintain either an arbitration proceeding or an action in court to recover for extra work unless the claim is based upon a written order from the Engineer. Payments for extra work will be based on agreed lump sums or on agreed unit prices whenever the Engineer and Contractor agree upon such prices before the extra work is started; otherwise payments for extra work will be based on actual field cost plus the specified percentage allowance.

For the purpose of determining whether proposed extra work will be authorized, or for determining the payment method of extra work, the Contractor shall submit to the Engineer, upon request, a detailed cost estimate for proposed extra work. The estimate shall show itemized quantities and charges for all elements of direct cost. Charges for the Contractor's and Subcontractor's extra profit, extra general superintendence, extra field office expense, and extra overheads shall be shown as a percentage addition to the total estimated net cost. Unless otherwise agreed upon by the Contractor and Engineer, the total of such percentage additions shall be fifteen (15) percent for the extra work by either the Contractor and/or Subcontractor.

When payment for extra work is based on actual field cost, the Contractor will be paid the actual field cost plus an allowance of fifteen (15) percent if the Contractor or Subcontractor performs the extra work. The allowance will be paid as full compensation for the Contractor's and Subcontractor's extra profit, extra general superintendence, extra field office expense, extra overheads, and all other elements of extra cost not defined herein as actual field cost.

The actual field cost shall include only those extra costs for labor and material expended in direct performance of the extra work and may include:

A. The actual payroll cost of all workmen such as laborers, mechanics, craftsmen, and foremen.

B. The Contractor's and/or Subcontractor's net cost for materials and supplies.

C. The rental charge for vehicles and construction equipment.

D. The transportation charges for equipment.

E. The charges for extra power, fuel, lubricants, water, and special services.

F. The charges for extra payroll taxes, bond premiums, and insurance premiums.

The form in which actual field costs records are kept, the construction methods, and the type and quantity of equipment used shall be acceptable to the Engineer.

Construction equipment which the Contractor has on the job site and which is of a type and size suitable for use in performing the extra work shall be used. The hourly rental charges for equipment shall apply to only the actual time the equipment is used in performing the extra work.

When extra work requires the use of equipment that the Contractor does not have on the job site, the Contractor shall obtain the concurrence of the Engineer before renting or otherwise acquiring additional equipment.

104.10 Time Limit for Filing Claims for Extra Work

Claims for extra work shall be filed at such intervals as directed by the Engineer or as designated in the Contract Documents, but in all cases not later than seven (7) days after the date of completion of the specified extra work.

104.11 Removals

The Contractor shall remove existing structures or part thereof when specified in the Contract and such removal shall be incidental to other bid items unless a separate bid is taken for the removal of such structures. The removal of such structures or parts thereof, when not specified in the Contract but subsequently required, shall be paid for as Extra Work.

Any material or equipment removed from the Project (excluding rubbish) shall be the property of the City and disposition shall be as directed by the City or stockpiled at locations designated by the City.

The Contractor, when authorized by the Engineer, may use salvaged material suitable for reuse in the new work. In case any old material is reused in the work, an amount equal to the cost of a like quantity of new material of same kind will be deducted from the contract price.

104.12 Cleaning of Work Site

The Contractor shall at all times keep the Project Area, including streets, alley, and all private or public property involved in or adjacent to the work free from any rubbish, surplus, or waste materials that have been deposited by employees or subcontractors or which have accumulated as a result of the work.

The Contractor shall not allow vehicle tires to track earth, gravel, or other materials onto streets. Access to the Project Site may be prohibited if and when necessary to accomplish that purpose. The Contractor shall load vehicles in such a manner as to avoid any spillage of earth or other materials onto streets while hauling them from or to the Project Area.

Concrete trucks or any other equipment shall not be flushed out onto public streets, walks, gutters, or storm drains.

Should the Contractor fail to comply with this requirement after twenty-four (24) hours written notice of non-compliance, and then the City may have said streets cleaned. The City will have this work accomplished by the most expeditious means available at the time it is required and not necessarily by the least expensive means when time is of the essence. Cost of any such required cleaning shall be summarized by the City and deducted from the payment due the Contractor.

104.13 Final Clean Up

Upon completion of the work and before acceptance and final payment will be made, the Contractor shall remove from the Project Area all surplus and discarded materials, rubbish and temporary structures and leave the Project Area in a neat presentable condition. The Contractor shall restore, at own cost and expense, all work completed under other previous contracts which has been damaged by the Contractor's operations, in general conformity with the specifications for the item or items involved. Final clean up shall be considered subsidiary and incidental to the other items of the Contract, and no separate or additional compensation will be made therefore. Workdays shall be charged against the Contractor until all cleanup is complete and to the satisfaction of the Engineer.

Page Intentionally Left Blank

SECTION 105

CONTROL OF WORK

105.1 Authority of Engineer

All work shall be completed under the supervision and satisfaction of the Engineer. The Engineer shall decide all questions that arise as to the quality and acceptability of materials furnished, work performed, manner of performance, rate of progress of the work, interpretation of the plans and specifications, acceptable fulfillments of the Contract, compensation, and dispute and mutual rights between Contractors under the specifications.

The Engineer shall determine the amount and quantity of work performed, materials furnished and estimate shall be final. The Engineer estimate in such event shall be a condition precedent to the right of the Contractor to receive money due under the Contract.

The Engineer may determine the place of commencement, the sequence of operations, and the prosecution of the work as deemed fit to best serve the needs and convenience of the public and for the proper and timely completion of the Contract.

The Engineer reserves the right to regulate the time of usage or to prohibit the use of any kind of tools, equipment, and plant which may cause objectionable smoke, noises, odors, or damage to property.

The Engineer shall have executive authority to enforce and make effective such decisions and orders as the Contractor fails to carry out promptly, and in case of failure on the part of the Contractor to execute work ordered by the Engineer, the Engineer may, at the expiration of a period of forty-eight (48) hours after giving notice in writing to the Contractor, proceed to execute such work as may be deemed necessary and the cost thereof shall be deducted from compensation due or which may become due the Contractor under the Contract.

105.2 Review of Engineer’s Decision

All decisions of the Engineer shall, when so requested, be rendered in writing. They shall be final and conclusive in all matters unless within ten (10) days after such decision the Contractor applies in writing to the Improvement and Service Committee for a review of such decision.

When an application for review of the Engineer's decision is presented, said Committee shall, within ten (10) days thereafter, give opportunity for the Contractor to appear before it and the Engineer, and present evidence bearing upon such decision, and any claims for a modification or reversal thereof.

Said Committee shall render its decision within ten (10) days after such appearance and its decision shall be final unless the Contractor shall, within ten (10) days after receiving the decision, give notice in writing of intention to file suit in court for the final determination of the matter.

105.3 Authority and Duties of Inspector

Inspectors assigned by the Engineer shall be authorized to inspect all work done and material furnished. Such inspection may extend to all or any part of the work and to the preparation, fabrication, or manufacture of the materials to be used. The Inspector is not authorized to revoke, alter, or waive any requirements of the specifications, nor is authorized to approve or accept any portion of the completed project. The Inspector shall call to the attention of the Contractor any failure of the work or materials to conform to the specifications and Contract, and shall have the authority to reject materials or suspend work until any questions at issue can be referred to and decided by the Engineer. Any dispute between the Inspector and Contractor shall be referred to by the Engineer.

If the Contractor fails to suspend operations when ordered to do so in writing, the work done after such order is issued may be rejected without payment therefore, as determined by the Engineer.

The Inspector shall in no case act as a supervisor or perform other duties for the Contractor, nor interfere with the management of the work done by the Contractor. Any advice which the Inspector may give the Contractor shall in no way be construed as binding the Engineer or City in any way or releasing the Contractor from fulfilling any of the terms of the Contract.

The presence or absence of an Inspector shall not relieve in any degree the responsibility or obligation of the Contractor to perform the work in accordance with the Contract Documents.

105.4 Authority of Green Bay Water Utility

The Green Bay Water Commission and its supporting staff shall be the corresponding authority for the supervision of the actual construction work on Water Utility construction projects pursuant to Subsection 66.0805(4) (a), Wisconsin Statutes and Subsection 9.15(1) (b), Green Bay Municipal Code of Ordinances.

105.5 Conformity with Plans and Specifications

All work performed and all materials furnished shall be in conformity with the lines, grades, cross sections, dimensions, and material requirements shown on the plans or indicated in the specifications. It shall be finished to produce quality work and appearance within the limits of precision expected of good construction.

The lines, grade, typical sections, and dimensions shown on the plans are subject to adjustment by the Engineer during construction, but any deviation of a character not contemplated or provided for in the plans or specifications that may be required to successfully complete the project will be determined by the Engineer and authorized by them in writing.

In the event the Engineer finds the materials or the finished product in which the materials are used not within reasonable close conformity with the plans and specifications through no willful neglect or omission by the Contractor but that reasonably acceptable work has been produced, the Engineer shall then make a determination if the work shall be accepted and remain in place. In this event, the Engineer will document the basis of acceptance by contract modification, which may provide for appropriate adjustment in the contract price for which such work or materials as the Engineer deems necessary to conform to determination based on engineering judgment.

In the event the Engineer finds the materials, or the finished product in which the materials are used or the work performed, are not in reasonably close conformity with the plans and specifications and have resulted in an inferior or unsatisfactory product, the work or materials shall be removed and replaced or otherwise corrected by and at the expense of the Contractor. The expense includes total and complete restoration of any disturbed surface to original or better than original condition, which existed before the repairs or replacement, regardless of improvements on lands where the repairs or replacement is required.

105.6 Coordination of Contract Documents

The following component parts and all supplemental documents are essential parts of the Contract and the requirements occurring in one are as binding as though occurring in all.

A. Addenda
B. Notice to Contractors
C. Instructions to Bidders
D. Special Provisions
E. Proposal
F. Plans
G. Contract
H. City of Green Bay Standard Specifications and Construction Standards for Public Works Construction
I. Wisconsin Department of Transportation Standard Specifications for Highway and Structure Construction
J. Performance Bond

In the event that any provision in any of the above component parts conflicts with any provision in any other of the component parts, the provision in the component part first enumerated above shall govern any other component part which follows it numerically, except as may be otherwise specifically stated. Calculated dimensions will govern over scaled dimension, unless obviously incorrect.

WisDOT Specifications, excepting Part 1, General Requirements and Covenants, are incorporated into and made a part of the Standard Specification. Where any provisions in the WisDOT Specifications conflicts with any provision in the Standard Specifications, the Standard Specifications shall govern.

The Contractor shall take no advantage of any apparent error or omission in the plans or specifications, and the Engineer shall be permitted to make such corrections and interpretations as may be deemed necessary for the fulfillment of the intent of the plans and specifications.

105.7 Cooperation by Contractors

The Contractor shall give the work the constant attention necessary to facilitate the progress thereof, and shall cooperate with the Engineer, inspectors, and with other contractors and/or utilities on or near the work in every way possible.

The City reserves the right at any time to contract for and perform other or additional work on or near the work covered by any Contract. The Contractor shall arrange and conduct work so as not to interfere with or hinder the progress or completion of the work being performed by other contractors and to join work to that of others in a proper manner, and in accordance with the spirit of the plans and specifications, and to perform work in proper sequence in relation to that of other work, all as may be directed by the Engineer.

The Contractor shall be held responsible for any damage done by employees or subcontractors under their contract to the work performed by another contractor. Each Contractor shall conduct operations and maintain the work in such condition that adequate drainage shall be in effect at all times.

In case of a dispute arising between two or more Contractors engaged on the same improvement or in different improvements as to the respective rights of each under the specifications, the Engineer shall be the referee and their decision shall be final and binding on all parties concerned and shall not be cause for any extra compensation to any of the parties involved.

105.8 Emergency Contacts

The Contractor shall supply the Engineer with a list of responsible people who can be reached 24 hours a day, 7 days a week in case of emergency.

105.9 Setting Lines and Grade

Unless otherwise specified in the Contract, the alignment and grade of the work shall be staked by the Engineer or their authorized representative, and shall not be changed without approval.

The Engineer will furnish and set the construction survey stakes or reference points and bench marks necessary to establish the location, alignment, and elevation for the project and such stakes will bear instructive markings or be accompanied by necessary detailed instructions. These stakes and marks shall constitute the field control by and in accordance with which the Contractor shall govern and execute the work. The Contractor shall furnish such other facilities and labor as may be required in establishing such other points and lines necessary to the prosecutions of the work. The Contractor shall furnish additional stakes and other materials necessary for maintaining the points and lines given. The Contractor shall be responsible for the preservation of all stakes and marks. If any of the survey stakes or marks have carelessly or willfully been destroyed or disturbed by the Contractor, the cost to the City of replacing them may be charged against the Contractor and be deducted from the payment of the work.

The Contractor shall provide reasonable and necessary opportunities and facilities for setting points and making measurements. The Contractor shall make timely demands upon the Engineer for such points and instructions as may be necessary as the work progresses. The Contractor shall not proceed until the Engineer has had the opportunity to furnish such points and instructions. The work shall be completed in strict conformity with such points and instructions.

Work performed without lines and grade being given, or work performed beyond the lines and grade shown on the plans or as given, will be considered as unauthorized and may not be measured or paid for by the City. Work so done may be ordered removed or replaced at the Contractor's expense.

105.10 Inspection of Work

All materials and each part or detail of the work shall be subject at all times to inspection by the Engineer or their authorized representatives. Such inspection may include mill, plant, field or shop inspection. The Engineer or their representatives shall be allowed access to all parts of the work and shall be furnished with such information and assistance by the Contractor as is required to make a complete and detailed inspection.

The Engineer reserves the right to inspect any and all sewers by the use of closed circuit internal televising (CCTV) system and to use the data and information obtained in the final determination as to the acceptability of the sewer.

If the Specifications, the Engineer's instruction, laws, Ordinances, or any public authority require any work to be specially tested or approved, the Contractor shall give the Engineer timely notice of its readiness for such inspection. If any work should be covered up without approval or consent of the Engineer, it shall, if required by the Engineer, be uncovered for examination at the Contractor's expense.

Any failure to reject work at the time of its construction shall not be construed as an acceptance of defective work. If any doubt exists as to the character of the work, the Contractor shall, if the Engineer requests remove or uncover such portion of the finished work as the Engineer may direct before the final acceptance of the same. After the examination, the Contractor shall restore said portion of the work to the standard required by the specifications. Should the work thus exposed or examined prove acceptable, the expenses of uncovering or removing and replacing of the parts removed shall be paid for as Extra Work. Should the work so exposed or examined prove unacceptable, the expenses of uncovering or removing and the replacing of the same in accordance with the specifications shall be borne by the Contractor.

105.11 Removal of Defective Materials and Workmanship

All materials furnished and work performed will be inspected by the Engineer, and if not in accordance with the Specifications, they will be rejected and shall immediately be removed from the premises, and other materials furnished and work performed in accordance herewithin. If the Contractor refuses to remove the work and materials when ordered, the Engineer shall have the right and authority to stop the Contractor at their work at once and the Engineer shall cause the

faulty work and materials to be removed and corrected at the cost and expense of the Contractor. Such expense shall be deducted from the monies then due or to become due to the Contract. If, however, the Engineer shall fail or neglect to correct any faulty or defective material or work as outlined above, the Contractor shall not be relieved of correcting said material or work and the right of final acceptance or condemnation of the work shall not be waived in any manner by reason of said failure or neglect on the part of the Engineer.

105.12 Order of Completion

The Contractor shall complete any portion of the work in such order of time as has been stated in the Contract, or in such order as the Engineer may declare necessary by reason of an emergency.

105.13 Use of Completed Portions

The City shall have the right to take possession of and use any completed or partially completed portion of the work, notwithstanding the time of completing the entire work or such portions, may not have expired. If such prior use increases the cost of, or delays the work, the Contractor shall be entitled to such compensation, or extension of time, or both as the Engineer may determine.

105.14 Final Inspection

When the Contractor considers the entire work completed, the Contractor shall notify the Engineer, in writing, that the work is complete and request the Engineer conduct an inspection of the work. Within a reasonable time thereafter the Contractor and the Engineer shall make an inspection of the work to determine the status or completion. If the Engineer does not consider the work complete, the Engineer will notify the Contractor, in writing, of reasons therefore. At this time any defects or imperfections that appear in the whole or any part of the work, which are caused by or due to any fault or negligence of the Contractor, the same shall be corrected before the work will be accepted. Upon completion of the work, work to repair the defects and imperfections by the Contractor, the Contractor shall notify the Engineer, in writing, that the work has been completed. If, upon inspection, the work is found to be satisfactory by the Engineer, a certification of completion will be issued.

105.15 Guarantee

Unless otherwise stated in the Special Provisions, the Contractor shall guarantee the work performed under the Contract for a period of one year from the date of final acceptance by the Common Council against defects or deficiencies. If any defective or deficient work should appear during the guarantee period, the Contractor shall replace or make acceptable repairs to the defective or deficient work at the Contractor's expense. This expense includes total and complete restoration of any disturbed surface to original or better than original condition, which existed before the repairs or replacement, regardless of improvements on lands where the repairs or replacement is required. The Performance and Payment Bond shall remain in force during this guarantee period.

SECTION 106

LEGAL REQUIREMENTS AND PUBLIC RESPONSIBILITY

106.1 Laws to Be Observed

The Contractor shall at all times observe and comply with all Federal and State laws and administrative rules, local laws, ordinances, and regulations which in any manner affect the conduct of the work and the hiring of labor and all orders or decrees of bodies or tribunals having jurisdiction or authority over the work. No plea of misunderstanding or ignorance thereof will be considered. The Contractor shall indemnify and save harmless the City and all of its officers, agents, and employees against any claim or liability arising from or based on the violation of any such law, ordinance, regulation, order, or decree, whether by themselves or their employees, subcontractors, or agents. The Contractor shall procure all permits and licenses and pay all charges and fees and give all notices necessary and incident to the lawful prosecution of the work.

106.2 Patented Process

It is understood and agreed that, without exception, contract prices are to include all royalties and costs arising from patents, trademarks, and copyrights in any way involved in the work. It is the intent that whenever the Contractor is required or desires to use any design, device, material or process covered by patent or copyright, the right for such use shall be provided for by suitable legal agreement with the patentee or owners and a copy of this agreement shall be filed with the Engineer; however, whether or not such agreement is made or filed as noted, the Contractor and the surety in all cases shall indemnify and save harmless the City and all its agents from any and all claims from infringement by reason of said use, and shall indemnify the City for any costs, expenses, and damages which it may be obliged to, by reason of any infringement, at any time during the prosecution or after the completion of the work.

106.3 Safety, Health and Sanitation

The Contractor shall comply with all Federal, State, and local laws governing safety, health, and sanitation. The Contractor shall also provide all safeguards, safety devices, and protective equipment and take any other needed actions reasonably necessary to protect the life and health of employees on the job and the safety of the public and to protect property in connection with the performance of the work covered by the Contract.

The Contractor shall designate a qualified and experienced safety representative at the site whose duties and responsibilities shall be the prevention of accidents and the maintaining and supervising of safety precautions.

106.4 Personal Liability of Public Officials

In carrying out any of the provisions of the Contract or in exercising any power of authority granted to them thereby, there shall be no personal liability upon the City, its agents, and employees, it being understood that in such matters they act as agents and representatives of the City. Any right of action by the Contractor against the City, its agents, or employees is hereby expressly waived.

106.5 No Waiver of Legal Rights

The City shall not be precluded or estopped by any measures, estimate, or certification made either before or after the completion and acceptance of the work and payment therefore, from showing the true amount and character of the work performed and materials furnished by the Contractor, or from showing that any such measurement, estimate, or certificate is untrue or incorrectly made, or that the work or materials do not conform in fact to the Contract. The City shall not be precluded or estopped, notwithstanding any such measurement, estimate, or certificate and payment in accordance therewith, from recovering from the Contractor and the Contractor’s sureties such damages as it may sustain by reason the Contractor’s failure to comply with the terms of the Contract. Neither the acceptance by the Engineer, nor any payment for or acceptance of the whole or part of the work, nor any extension of time, nor any possession taken by the City, shall operate as a waiver of any portion of the Contract, or of any power herein reserved, or any right to damages herein provided. A waiver of any other or subsequent breach of the Contract shall not be held to be a waiver of any other or subsequent breach.

106.6 Insurance - General

All insurance is the responsibility of the Contractor. The Contractor and each separate Subcontractor shall purchase and maintain such insurance as will protect them, and indemnify and save harmless the City from any and all claims for General and Automobile Liability and Worker's Compensation/Employers' Liability, including claims for damages resulting in bodily injury, including but not limited to death, and property damage arising out of or resulting from the Contractor's direct or indirect operations under this Contract, whether such operations be performed by their own work forces or by any Subcontractor or anyone directly or indirectly employed by any of them.

This insurance shall be written for not less than any limit of liability specified in contract special provisions, or required by law, whichever is the greater, notwithstanding that the policy may have lower limits of liability applying elsewhere in the policy, and shall include contractual liability insurance as applicable to the Contractor's obligations.

The Contractor's and Subcontractor's insurance shall always be primary with respect to the City's responsibilities under this Contract. The City of Green Bay shall be named as additional insured on the types of insurance listed in this section, and shall be listed as the Certificate Holder on any Certificate of Insurance issued to the City as proof of coverage. Insurance policies must remain in an active status for the life of the project, and shall not be allowed to expire until a minimum of one year after final payment has been approved by City Council.

The Contractor's and Subcontractor's insurance shall contain a provision that provides 30 days written notice of cancellation or change to the City.

No insurance required under the Contract shall be carried with an insurer not authorized to do business in Wisconsin by the Wisconsin State Insurance Department. The City reserves the right to disapprove any insurance company.
Type of Insurance will vary per contract and at a minimum the following will be required:

A. General Liability:

1. Commercial General Occurrence policy, edition 2006 or 2010 including:

   a. Premises and Operations
   b. Products and Completed Operations
   c. Advertising and Personal Injury
   d. Explosion, Collapse and Underground Hazard coverage
   e. Contractual Insurance in writing under General Liability
   f. Broad Form Property Damage
   g. Coverage for Independent Contractors
   h. Care, Custody and Control coverages for City-owned materials at worksite
   i. Endorsement naming the City of Green Bay, its employees, agents and assigns as Additional Insureds as respects work performed by the Contractor/Subcontractor for the City/Owner.

2. Limits of Liability:

   Bodily Injury/Property Damage Combined Single Limits:

Per Occurrence	$1,000,000
Products/Completed Operations Aggregate	$2,000,000
Personal Injury/ Advertising Injury	$1,000,000
Fire Damage Limit	$ 50,000
Medical Payments Limit	$ 5,000
General Aggregate	$2,000,000

B. Automobile Liability:

1. Coverages must include the following extensions:

Comprehensive Forms

a. All Owned Autos
b. All Hired Autos
c. All Non-Owned Autos
d. Mobile Equipment
e. Specialized Equipment
f. Contractual Insurance
g. Uninsured Motorists to Limit of Policy
h. Additional Insured Endorsement naming City of Green Bay, its employees, agents and assigns.

2. Limits of Liability:

Combined Single Limit/Bodily Injury and Property Damage:

$1,000,000 per person/accident

Uninsured Motorists:

$25,000 per person
$50,000 per accident

C. Worker's Compensation and Employers' Liability Insurance:

Limits of Liability

Workers' Compensation	$1,000,000 per accident
	$1,000,000 disease policy limit
	$1,000,000 disease each employee
Employers' Liability	$1,000,000

Waiver of Workers Compensation Subrogation - the workers' compensation policy is to be endorsed with a waiver of subrogation. The insurance company, in its endorsement, agrees to waive all rights of subrogation against the City, its officers, officials, employees and volunteers for losses paid under the terms of the policy that arises from the work performed by the named insured for or on behalf of the City of Green Bay.

D. Umbrella Liability:

The contractor shall provide $2,000,000 cover for bodily injury, personal injury and property damage per occurrence in excess of coverage carried for Employers Liability, Commercial General Liability, and Automobile Liability.

E. Contractor Pollution Liability (Occurrence Basis):

a. Limit of Liability: $1,000,000
b. Form must include coverage for natural resources damage
c. Minimum Must include waiver of subrogation endorsement in favor of the City
d. Coverage must include transportation (including watercraft if applicable) and loading and unloading.

106.7 Indemnification

The Contractor hereby agrees to indemnify, defend and hold harmless the City of Green Bay, its elected and appointed officials, officers, employees, agents, representatives and volunteers, and each of them, from and against any and all suits, actions, legal or administrative proceedings, claims, demands, damages, liabilities, interest, attorneys' fees, costs and expenses of whatsoever kind or nature in any manner directly or indirectly caused, occasioned, or contributed to in whole or in part or claimed to be caused, occasioned, or contributed to in whole or in part, by reason of any act, omission, fault, or negligence, whether active or passive, of the Contractor or of anyone acting under its direction or control or on its behalf, even if liability is also sought to be imposed on City of Green Bay, its elected and appointed officials, officers, employees, agents, representatives and volunteers. The obligation to indemnify, defend and hold harmless the City of Green Bay, its elected and appointed officials, officers, employees, agents, representatives and volunteers, and each of them, shall be applicable unless liability results from the sole negligence of the City of Green Bay, its elected and appointed officials, officers, employees, agents, representatives and volunteers.

The Contractor shall reimburse the City of Green Bay, its elected and appointed officials, officers, employees, agent or authorized representatives or volunteers for any and all legal expenses and costs incurred by each of them in connection therewith or in enforcing the indemnity herein provided.

In the event that the Contractor employs other persons, firms, corporations or entities (sub-contractor) as part of the work covered by this Agreement, it shall be the Contractor's responsibility to require and confirm that each sub-contractor enters into an Indemnity Agreement in favor of the City of Green Bay, its elected and appointed officials, officers, employees, agents, representatives and volunteers, which is identical to this Indemnity Agreement.

This indemnity provision shall survive the termination or expiration of this Agreement.

106.8 Builders' Risk Insurance (This does not apply to additions and/or alterations on existing structures).

The City will require the contractor to provide Builder's Risk Insurance on the project if applicable and noted in contract special provisions.

106.9 Equal Employment Opportunity

The Contractor and Subcontractors shall not discriminate against employees and applicants for employment with respect to hire, tenure, terms, conditions, or privileges of employment, or any matter directly or indirectly related to employment, because of their race, color, religion, sex, sexual orientation, age, national origin, ancestry, physical condition, or developmental disability.

106.10 Employment of Unauthorized Aliens

All contracts executed with the City shall be subject to the condition that unauthorized aliens not be employed by the Contractor within the City of Green Bay, consistent with 8 U.S.C.§1324a.

A violation of the above condition shall be a breach of contract and a basis to void the contract and will warrant removal of a contracted business/company from future consideration by the City of Green Bay.

It shall be a defense that an employer was shown and can produce fraudulent documentation of an employee's legal immigration status. The above defense will also apply if the employee was cleared through the Basic Pilot Program.

This section does not hold contracted business/companies responsible for unauthorized aliens who are employed by said contracted business/company for work performed entirely outside of the limits of the City of Green Bay.

106.11 Erosion Control Permits

The Contractor shall comply with Chapter 34, Green Bay Municipal Code of Ordinances (Construction Site Erosion Control Ordinance) and NR216, Wisconsin Administrative Code at all times while performing work under the Contract.

Unless otherwise noted in the Contract Documents, the City will submit a WDNR Notice of Intent (NOI) to obtain coverage under the Wisconsin Pollutant Discharge Elimination System General Permit for construction site erosion control on Public Works contracts with one acre or greater of land disturbing activity. The Contractor shall meet the conditions of the permit by properly installing and maintaining the erosion control measures as shown on the plans, specified in the Special Provisions, or as directed by the Engineer. A copy of the permit will be available at the office of the Department Public Works – Engineering Division.

The Contractor shall prepare and submit an erosion control plan, including implementation schedule, and application for a City of Green Bay Construction Site Erosion Control Permit. Application along with one (1) set of plans shall be submitted to the Engineer prior to or at the preconstruction meeting. The Contractor may use the erosion control plan provided in the

Contract Documents but shall modify the plan to meet the Contractor's construction schedule and methods of construction. No land disturbing activities shall begin until permit has been issued and plan implemented by the Contractor. A copy of permit, approved plans and inspection reports shall be kept on the project site and made available for inspection at all times.

106.12 Safety Data Sheets

All Contractors and Subcontractors who bring hazardous substances (as defined by OSHA) to the construction site shall have on file at the project site a copy of the Safety Data Sheet (SDS) for that substance. The Contractor shall maintain a file of all SDS's required for the project at the site.

At or before the preconstruction meeting, the Contractor shall submit a letter of compliance stating the SDS's will be kept on file at the project site, available for review at any time by the Engineer.

Each Contractor or Subcontractor shall comply with all Federal and State regulations regarding hazardous substances they bring to the construction site.

106.13 Preconstruction Photographic Documentation

The Contractor shall provide preconstruction photographic documentation. The photographic documentation shall include digital photographs and video of the construction route. The photographic documentation shall be delivered to the Engineer at the preconstruction meeting. The Contractor must label the photos and video identifying where the picture was taken and what the picture is of.

The date, the name of project, and the location where the photograph was taken shall be indicated with each digital photograph. The digital photographs shall be taken along the centerline of the construction route at a minimum of 100-foot intervals and at each approach to an intersection. Additionally, photographs shall be taken at any feature that may be impacted by the construction.

The video shall be taken in a digital video format. The video shall be taken of the area along and 50 feet to either side of the pipeline route. The video shall be made by panning the specified construction area slowly while verbally describing the location in order to adequately observe the existing condition of the pavement, terrace, sidewalk, driveways, adjacent properties, and other improvements.

The digital video and photographs, the Contractor shall submit one (1) copy of the digital video, formatted on a compact disc or Universal Serial Bus (USB) as Motion Pictures Experts Group (MPG), to the Engineer. The file name should be filename.mpg, where the filename is a descriptive name of the video being submitted.

The preconstruction photographic documentation will be considered incidental to the cost of the project and no separate payment will be made for the work.

106.14 Public Protection and Safety

The Contractor shall notify the Engineer, Police Department, Fire Department, and all involved utilities and railroad companies at the earliest possible date of the starting of any construction so that arrangements may be made, if necessary, for closing the street and providing satisfactory detours, ingress, and egress. The Contractor shall conduct the work at all times in such a manner as to insure the least obstruction to traffic. The convenience of the general public and of the residents along the street shall be provided in a satisfactory manner as outlined in Subsection 106.16, Maintenance of Ingress and Egress.

Fire hydrants shall be visible and accessible from the street at all times for the Fire Department. No material or other obstructions shall be placed within ten (10) feet of a fire hydrant.

The Contractor shall avoid as far as possible the maintenance of any condition that might be deemed at law to be an "attractive nuisance." Where such condition is unavoidable or where apparent or potential hazards occur, incident to their conduct of the work, the contractor shall maintain a proper watch or provide other reasonable safeguards.

The Contractor and their surety shall be responsible for all damage, bodily injury, or death arising through negligence either in maintaining an attractive nuisance or otherwise.

106.15 Notification of Residents

The Contractor shall notify residents and businesses abutting the project site, in writing, with a copy to the Engineer, at least seventy-two (72) hours prior to the start of construction.

106.16 Maintenance of Ingress and Egress

The Contractor shall perform work in such a manner as to interfere as little as possible with both pedestrians and vehicular ingress and egress. In all events, the Contractor shall maintain a safe and satisfactory passage for pedestrians along and across the project, installing temporary walks where necessary in the opinion of the Engineer. The Contractor shall also install temporary roadways where considered necessary by the Engineer.

The Contractor shall provide access to disabled residents at all times.

The Contractor shall maintain ingress and egress to all commercial, business, industrial, and public (school, park, etc.) properties at all times. Ingress and egress to all other properties shall be maintained as much as practical with closure of driveways being permitted as follows:

A. Access may be restricted no more than four (4) hours for utility construction or for roadway excavation and graveling operations adjacent to driveway,

B. Access may be restricted during paving operations and cure time, as authorized by the Engineer.

The Contractor shall notify the property owner or current resident in writing, with a copy to the Engineer, at least forty-eight (48) hours prior to restricting access to any property.

106.17 Protection and Restoration of Property

The Contractor shall use every reasonable precaution to prevent the damage or destruction of private property such as poles, trees, shrubbery, crops, and fences adjacent to or interfering with the work; all overhead structures such as wire, cables, etc. and all underground structures such as water or gas shut-off boxes, water meters, pipes, conduits, etc. within or outside of the right-of-way.

The Contractor shall notify the owners of all corporate or private property that interferes with the work advising them of the nature of the interference, and shall arrange with them for the disposition of such property. The Contractor shall furnish the Engineer, upon request, with copies of all such notifications and final agreements.

The Contractor shall be responsible for the damage or destruction of property resulting from neglect, misconduct, or omission in the manner or method of execution or non-execution of the work, or caused by defective work or the use of unacceptable materials, and shall restore such property to a condition similar or equal to that existing before such damage or injury was done, by repairing, rebuilding, or replacing it as may be directed, or the Contractor shall otherwise make good such damage or destruction in an acceptable manner. If the Contractor fails to do so, the Engineer may, after the expiration of a period of forty-eight (48) hours after giving written notice to the Contractor, proceed to repair, rebuild, or otherwise restore such property as may be deemed necessary, and the cost thereof shall be deducted from any compensation due or which may become due the Contractor under the contract.

106.18 Protection of Trees

The Contractor shall not grade, excavate, store material and/or equipment, or otherwise disturb the area within five (5) feet of any tree located in the project site without prior permission from the Engineer or City Forester. No ropes, cables, or guys shall be fastened to or attached to any tree for anchorage. The City will arrange for the repair or replacement of any trees damaged by the Contractor and the cost of such work will be deducted from the payment to the Contractor. Protection of trees shall be incidental to the Contract.

106.19 Protection of Property/Survey Monuments

The Contractor shall use extra care to protect and preserve all land boundary and survey control monuments from being disturbed during the course of construction. Where property/survey monuments cannot reasonably be protected, the Contractor shall notify the Engineer in order to establish witness points to make the restoration of the property/survey monuments easier. In such cases, the Engineer or authorized surveyor shall restore the property/survey monuments at no cost to the Contractor. Where property/survey monuments are disturbed or removed by the Contractor without proper notification to the Engineer, the Contractor shall have the property/survey monuments restored at the Contractor's expense by hiring a licensed land surveyor. The Contractor shall provide written documentation from the licensed land surveyor stating that the property/survey monuments were restored.

106.20 Contractor's Responsibility for Work

The work shall be under the charge and care of the Contractor until final acceptance by the City Council. The Contractor shall assume all responsibility for injury or damage to the work by action of the elements or from any other cause whatsoever, and shall rebuild, repair, restore, and make good, at the Contractor's expense, all injuries or damages to the work, except that when the project is placed in operation by order of the Engineer, the provisions of this article shall not apply to damage caused by such operation and not due to the Contractor's fault or negligence.

In case of suspension of work from any cause whatever, the Contractor, prior to suspension, shall take such precautions as may be necessary to prevent damage to the project, provide for normal drainage, and shall erect any necessary temporary barricades, signs, or other facilities, at his /her expense, as directed by the Engineer.

106.21 Bulk Water Stations

Contractors must apply for a permit at the Green Bay Water Utility office at 631 South Adams Street for use of the bulk water stations. When the permit is issued, the Contractor will receive an operating key and authorization tags. The tags must be displayed on the dash of any vehicles drawing water. There are twelve bulk water stations throughout the City. The locations of these bulk water stations are listed below. Only these bulk water stations are available to the Contractors from April 1st through November 1st weather pending. From November 1st to April 1st, the Contractors must draw water at the Huron Road water tower "Hot Box" located at the southwest corner of Huron Road and Finger Road or the "Hot Box", 225 feet north of Velp Avenue on Columbia Avenue.

Contractors are responsible for all costs associated with the use of the bulk water stations including the cost of water used.

<u>WEST SIDE OF GREEN BAY</u>

1100 Columbia Avenue – Year-Round Site
2325 Hutson Road (North side of Hutson Road-500' East of Hinkle Street)
Morley Road @ Moraine Terrace (SE corner)
2700 block of West Mason (S. Frontage Road)
400 block of Liberty St. (300 Ft. W. of Broadway)
Florence Avenue @ Janice Avenue (NE Corner)

<u>EAST SIDE OF GREEN BAY</u>

100 Bay Beach Road (W. of Quincy)
Clay Street @ Eliza Street (NE Corner)
Sussex Road – 500' N. of Scottwood Dr. (CTH "I")
720 Huron Road – Year-Round Site
2200 Block of Main Street (Frontage Road by Burger King)
Gershwin Dr. – 100' W. of Lake Largo Dr.

106.22 Temporary Sanitary Facility

The Contractor shall provide and maintain an approved chemical toilet for the use of all workers. The toilet shall be placed in an inconspicuous place, kept clean and removed at the completion of the project. The toilet will be considered incidental to the cost of the project and no separate pay will be made for its provisions, maintenance, and removal. Failure to provide a temporary facility will result in a deduction from the overall contract value equal to two (2) times the City's rental cost of a sanitary facility.

106.23 Dust Control

The Contractor shall make every effort to keep the amount of dust to a minimum. The Engineer shall approve the manner of dust control.

106.24 Noise

The Contractor shall abide by the City's Noise Ordinance (Chapter 27, Green Bay Municipal Code) at all times during the prosecution of work under the Contract.

106.25 Mailboxes

The Contractor shall remove and replace any signs and/or mailboxes in conflict with construction. Signs and all mailboxes shall be replaced the same day that they are removed. U.S. Postal Service to properties shall not be interrupted during construction. The cost of this work shall be incidental to all other bid items.

Where requested by the U.S. Post Service during construction, mailboxes shall be temporarily relocated by the Contractor, as directed by the Engineer, and later reinstalled at their permanent site. If no bid item is included for such work, the cost of this work shall be considered incidental to other items in the Contract.

106.26 Interruption of Sewage or Storm Water Flow

The Contractor shall provide for the flow in existing sewers, watercourses, culverts, gutters, catch basin, drains, etc., which are affected by the prosecution of the work. All existing structures that are disturbed must be restored to a condition at least equal to their original condition or better and to the satisfaction of the Engineer.

106.27 Opening of Street

When the Contract provides that street or portion thereof shall be closed to traffic during construction, the work shall not be opened to traffic until so directed or authorized by the Engineer. Whenever all of the work or any portion thereof is in an acceptable condition for travel, such section shall be opened to traffic as may be directed by the Engineer, but such opening shall not be construed as assumption of the maintenance by the City unless so specifically provided in the Contract, nor as acceptance of the street or any part of it, nor as a waiver of any provisions of the Specifications and Contract.

Whenever the Contractor is required to open to traffic all of the work or any portion thereof in accordance with the provisions herein, or whenever the Contractor shall, at the Contractor's own volition and so authorized by the Engineer, open to traffic all of the work or any portion thereof prior to acceptance, the Contractor shall conduct the remainder of the construction so as to cause the least obstruction to traffic.

The Contractor shall notify the Engineer a minimum of seven (7) days before a street is scheduled to be opened to traffic so the City can install traffic control signs prior to the opening of the street. The Contractor shall maintain traffic control and barricades until the City has completed its work.

SECTION 107

PROSECUTION AND PROGRESS

107.1 Subletting or Assignment of Contract

The Contractor shall not sublet, sell, transfer, assign, or otherwise dispose of the Contract or any portion thereof, or of their right, title, or interest therein, without written consent of the Engineer.

Consent to sublet any portion of the Contract shall not be construed to relieve the Contractor of any responsibility for the fulfillment of the Contract or to release the Contractor or the Contractor's surety of liability under the Contract and bond.

The Contractor shall be fully responsible to the City for the acts and omissions of Subcontractors and of persons and organizations either directly or indirectly employed by the Contractor. Nothing contained in the Contract Documents shall create any contractual relation between any Subcontractor and the City. The Contractor shall incorporate the terms and conditions of the Contract into all subcontract agreements entered into with Subcontractors.

Requests for permission to sublet any portion of the Contract shall be in writing and accompanied by a showing (approved Bidder's Proof of Responsibility) that the organization, which will perform the work, is particularly experienced and equipped for such work. The Engineer may also require that each request be accompanied by a copy of the proposed subcontract. Any subsequent change in the terms of the subcontract shall be subject to separate approval. The Contractor shall not change Subcontractors without written permission from the Engineer.

Work by a Subcontractor shall not proceed until the request for permission to sublet such work is approved and Subcontractor has a certificate of insurance on file with the City. If the Contractor proposes to have work performed by a person or firm other than a Subcontractor, the Contractor shall inform the Engineer in writing, if required, of the specific arrangement under which the work will be performed, so that it may be established whether or not such arrangement constitutes subcontracting.

The Contractor shall not sublet over fifty (50) percent of the total Contract amount without written consent of the Engineer.

107.2 Work Schedule

At a date no later than the preconstruction conference, the Contractor shall submit a detailed construction schedule, in the form of a bar graph, to the Engineer for approval. Contractor shall update the schedule on a monthly basis or as directed by the Engineer. The Contractor shall update the revised construction schedule within three (3) days of a request by the Engineer.

The Engineer shall have full and complete authority to designate the time of beginning work on any part of the Contract and to schedule the operations of the Contractor in such a manner as deemed necessary to best serve the needs and convenience of the general public and for the proper and timely completion of the Contract.

107.3 Notice to Proceed

The Contractor shall not begin work on any part of the Contract and no materials or equipment shall be brought upon the site of the work prior to receiving a written Notice to Proceed from the Engineer. The Contractor shall begin work within ten (10) days after the date of the Notice to Proceed.

The Contractor shall give written notice to the Engineer at least seventy-two (72) hours in advance of the date intended to commence operations.

107.4 Project Communication

The Contractor shall call or meet the Engineer daily between 3:00 pm and 3:30 pm to report progress and to communicate the next day's schedule of operations. The Contractor shall call or meet with the Engineer daily between 7:30 am and 8:00 am to confirm the day's schedule and operations.

Green Bay Metro does not anticipate busses to be rerouted. A one (1) week notification prior to construction shall be given to Green Bay Metro. Contractor shall provide notice to Transit Director at (920) 448-3455. Bus schedules and routes can be found at http://www.greenbaymetro.org

Green Bay Area School does not anticipate busses to be rerouted. A one (1) week notification prior to construction, shall be given to the Green Bay Area School District prior to any work within 3 blocks of a school, Transportation Scheduler at (920) 448-2164.

107.5 Limitations of Operations

The Contractor shall conduct work so as to create a minimum amount of inconvenience to vehicular and pedestrian traffic. The Engineer may require the Contractor to finish part of the Contract on which work is in progress before work is started on any additional part.

107.6 Days of Work and Hours of Work

The Contractor shall be limited to working Monday through Friday, 7:00 a.m. to 10:00 p.m. If the Contractor wishes to work on weekends and holidays, the Contractor shall obtain written approval from the Engineer seventy-two (72) hours in advance of work. If the Contractor elects to work on Sunday or holiday, the Contractor shall reimburse the City for the cost of inspection.

107.7 Weather Conditions

In the event work is prosecuted during adverse weather conditions, the Contractor will be required to exercise precautions necessary to produce satisfactory work, and shall protect the finished work from the elements. It is agreed and understood that the cost thereof has been included in the unit prices bid for the various items of work in the Contract; therefore no extra compensation will be allowed.

Snow plowing operations shall be coordinated with Operations Director at (920) 492-3736. The City will be responsible for plowing the open traffic lanes. The Contractor will be responsible for:

1. Clearing snow where construction is taking place.
2. Clearing snow prior to switching traffic control.

The Contractor shall coordinate the disposal or stockpile of snow with Operations Manager at (920) 492-3736. When traffic flows are altered due to construction phasing, they shall be notified one (1) full working day in advance to ensure snow plow operations are aware of new traffic flow locations in the event of a snow fall.

The City will make every effort to avoid traffic control during plowing and salting operations, but in the event the City disturbs or damages traffic control, the Contractor will be responsible for repairing traffic control. After each snow event, the Traffic Control Contractor shall drive through the project to ensure traffic control meets MUTCD standards. If traffic control devices lose retro-reflective characteristics due to snow and/or road slush, the Contractor shall replace devices or clean the devices to restore the retro-reflective characteristics.

107.8 Contractor's Representative

The Contractor shall have at all times during the progress of construction, irrespective of the amount of work sublet, a competent superintendent or designated representative capable of reading and thoroughly understanding the plans and Specifications, as the Contractor's agent on the work, who shall receive instructions from the Engineer. The Contractor's superintendent or designated representative must be acceptable to the Engineer and shall have full authority to execute the orders or directions of the Engineer without delay and to supply promptly such materials, tools, plant, equipment, and labor as may be required to properly perform the work.

107.9 Competent Workers

The Contractor shall employ an ample and competent workforce. All workers shall have sufficient skills and experience to properly perform the work assigned to them and in the operation of equipment and tools required to perform all work properly and satisfactorily.

Workers engaged in special work or skilled work shall have sufficient experience in such work and in the operation of the equipment and tools required to perform all work properly and satisfactorily.

The Engineer may order the dismissal of any person employed on the work due to misconduct or is incompetent or neglects or refuses to comply with the directions given by the Engineer. The employee shall be removed immediately and shall not be re-employed on any part of the work without the written consent of the Engineer.

Should the Contractor fail to remove such person or persons as required above, or fail to furnish suitable and sufficient personnel for the proper prosecution of the work, the Engineer may suspend the work by written notice until such orders are complied with.

107.10 Methods and Equipment

The Contractor shall provide and furnish the machinery, equipment, and tools necessary to perform the work. These shall be in such condition and of such capacity as will produce work of satisfactory quality and complete it within the contract time.

Equipment shall be such that no injury to the roadway, pavement, structures, adjacent property, or other streets will result from its use, and it shall conform to the requirements set forth in detail under specific items or classes of work.

The Contractor shall not operate vehicles or equipment over the subgrade, base course, or pavement that may cause damage to the subgrade, base course, or pavement. This restriction applies not only to the type of vehicles or equipment but also to the gross weights and loads of the vehicles or equipment.

The Engineer reserves the right to regulate the time of usage or to prohibit the use of any type of machinery, equipment, or tools which may cause objectionable smoke, noises, odors, or damage to property.

Failure on the part of the Contractor to provide adequate equipment, maintained in proper working order, may be sufficient cause for suspension of specific operations until compliance is attained or may constitute cause for default of contract.

When the methods and equipment to be used by the Contractor in accomplishing the construction are not prescribed in the Contract, the Contractor is free to use any methods or equipment that he demonstrates to the satisfaction of the Engineer will accomplish the contract work in conformity with the requirements of the Contract.

When the Contract specifies the use of certain methods and equipment for the work, such methods and equipment shall be used unless the Engineer authorizes other methods and equipment. If the Contractor desires to use a method or type of equipment other than those specified in the Contract, the Contractor may request authority from the Engineer to do so. The request shall be in writing and shall include a full description of the methods and equipment proposed and the reasons for desiring to make the change. If approval is given, it will be on the condition that the Contractor will be fully responsible for producing construction work in conformity with contract requirements. If, after trial use of the substituted methods or equipment, the Engineer determines that the work produced does not meet Contract requirements, the Contractor shall discontinue the use of the substitute method or equipment and shall complete the remaining construction with the specified methods and equipment. The Contractor shall remove the deficient work and replace it with work of specified quality, or take such other corrective action as the Engineer may direct. No change will be made in basis of payment for the construction items involved or in contract time as a result of authorizing a change of methods or equipment under these provisions.

107.11 Suspension of Work

The Engineer shall have the authority to order the partial or complete suspension of operations for such period or periods as deemed necessary, in the interest of public safety and convenience, or due to unsuitable weather and such other conditions as are considered unfavorable for

prosecution of satisfactory work, or for such time as is necessary due to failure on the part of the Contractor to carry out orders given or to perform any or all provisions of the contract. Authorizations or orders to suspend work shall be in writing. Unless specifically provided, no additional compensation or additional contract time will be allowed due to such suspension of operations.

107.12 Time of Completion

Time of completion of each part of the work under the Contract will be specified in the Contract Documents as a specific number of work days, calendar days including Sundays and Holidays, or a given calendar day on or before which the work shall be completed, as well as a fixed and agreed amount of liquidated damages due the City from the Contractor for failure to complete the work in the specified time. It is agreed and understood that the completion of the work within the time as specified is an integral part of the Contract. The starting date of the Contract will be the date the Contractor begins work on that particular part of the Contract, but in no event will it be later than the date the Engineer requests the Contractor to begin work on that particular part of the Contract by written notification.

Work shall be prosecuted effectively and diligently to completion. Once work on the Contract has commenced, the contractor shall proceed continuously to completion. Failure to begin operations, or failure to diligently prosecute the work, may be considered as a breach of Contract and render the Contractor liable to action under Section 107.15, Default of Contract, or the revocation or suspension of the Contractor's privilege to bid additional work, or both. Failure to proceed continuously in prosecution of the work, may also result in the denial to authorize work during weekends or holidays as provided for under Section 107.6, Days of Work and Hours of Work.

In the event that the Contractor is successful in being awarded more than one part of a Contract, or multiple City contracts, the work shall be performed on each part or Contract concurrently and continuously in order that the completion dates are met. Prior to being awarded two or more parts or Contracts, the Contractor shall submit to the Engineer, in writing, a work schedule and evidence that the Contractor has adequate labor and equipment to meet the completion dates of all Contract parts.

Contract time will not be charged during periods of complete suspension of operations, when approved by the City in conjunction with an order by the Engineer suspending operations, or when so provided in the Special Provisions.

Contract time may be extended in an amount as is mutually agreed upon by the Engineer and the Contractor, on the basis of contract change orders involving alterations in the Contract affecting the prosecution of work, or involving extra or additional work, when such alterations are necessary for the purpose or convenience of the City when such extra additional work is of such character or is ordered to be done at such a time that the amount of time reasonably necessary to perform such work is disproportionate to the contract specific originally set up in the proposal. Any agreement for extended time on this account shall be arrived at concurrently with and as a part of the consideration for the specific alteration or extra or additional work covered by that order.

Permitting the Contractor to continue working after the expiration of the time fixed for its completion or after the date of time extension shall in no way act as a waiver on the part of the City for any of its rights under the Contract.

107.13 Delays and Extension of Time

Contract time may be extended in an amount as mutually agreed by the Contractor and the Engineer providing the Contractor submits to the Engineer a detailed explanation of facts requesting said extension in writing at least ten (10) days prior to the expiration of the contract time for that part of the Contract. Contract time will be extended only to avert extreme hardship on the Contractor and providing the best interests of the City are served by said extension.

If the Contractor is delayed at any time in the progress of the work by an act of the City, or by any other Contractor employed by the City, or by any changes ordered in the work, or by strikes, lockouts, fire, unusual delay in transportation, unavoidable casualties, or any causes beyond the Contractor's control, or by any causes for which the Engineer may justify the delay, then the time of completion shall be extended for such reasonable times as the Engineer may decide, provided the Contractor provides written notice of the cause of delay within ten (10) days after it first occurs.

107.14 Liquidated Damages

Should the Contractor fail to complete any part of the work as specified in the Contract, or within such extra time as may have been allowed by contract time extensions, there shall be deducted from any monies due or that may become due the Contractor, or in the event no monies are due, the Contractor shall pay to the City, a sum of money as stipulated in the Contract for each and every work day or calendar day as specified by the Contract that the work shall remain uncompleted. This sum shall be considered and treated not as a penalty but as a fixed, agreed, and liquidated damages due the City from the Contractor by reason of inconvenience to the public, added cost of engineering and supervision and other items which have caused an expenditure of public funds resulting from failure to complete the work within the time specified in the Contract.

Five Hundred Dollars ($500.00) per calendar day shall be charged as liquidated damages for failure to complete the work within the time frame specified. No time extensions will be given due to delays by other contractors.

1. If the Contractor does not complete the work within the contract time of within the extra time allowed under Engineer-granted time extensions, the Owners will assess liquidated damages. The Owner will deduct a specified sum from payments due the Contractor for every calendar day that the work remains incomplete.

2. This deducted sum is not a penalty but is a fixed, agreed, liquidated damage due the Owner from the Contractor by reason of inconvenience to the public, the added cost of engineering and supervision, and the other items that have caused an expenditure of public funds resulting from the Contractor's failure to complete the work within the contract time.

3. Unless modified in the Special Provisions, the Owner will assess liquidated damages.

4. If the Engineer allows the Contractor to continue and finish the work or any part of it after the contract time expires, the Owner waives no rights under the contract.

107.15 Default on Contract

The Improvement and Service Committee shall have the right and power to make final determination as to the proper performance of this Contract. In the event the Contractor fails to perform the work in accordance with the Specifications or in any way defaults therein or shall discontinue the prosecution of the work, the Improvement and Service Committee may take charge of the work and complete the same or cause it to be completed at the charge, cost, and expense of the Contractor and Surety and in such event, the City may take possession of and utilize in the completion of the work such materials, appliances, and plant as may be on the site of the work and necessary for its completion.

107.16 Removal of Equipment

In the case of annulment or termination of the Contract before completion for any cause whatever, the Contractor, if notified to do so by the Engineer, shall promptly remove any part or all of the Contractor's equipment and supplies from the project site. The City shall have the right to remove such equipment and supplies at the expense of the Contractor if the Contractor fails to abide by such order.

Page Intentionally Left Blank

SECTION 108

CONTROL OF MATERIALS

108.1 Source of Supply and Quality

The Specifications require the use of new, high quality materials throughout the work, except as may specifically be provided elsewhere in the Specifications, on the plans, or in the special provisions, incorporated in the work in such a manner as to produce completed construction which is workmanlike and acceptable in every detail.

Only approved materials shall be incorporated into the work. The permitted use of an untested material shall not be construed as implied approval of the material, and such use shall be at the Contractor's risk pending completion of subsequent tests made on representative samples of the material.

Fabricated materials obtained by the Contractor from a manufacturer or a supplier shall, at the Engineer's discretion, be subject to approval before delivery of the material to the job site. Furthermore, the Contractor may be required to obtain material from another approved source, if it is determined that the product of a manufacturer or supplier is not of satisfactory uniformity or consistent quality.

In the case of materials obtained from or produced from natural deposits, either commercially or by the Contractor, the Contractor shall obtain the Engineer's preliminary approval of the source.

The Contactor shall furnish samples as required, representative of the material proposed for the work, in sufficient time to permit testing as necessary to establish a basis for approval. Such samples shall be obtained under the observation of, and with methods approved by the Engineer.

Tests will be made on these preliminary samples and reports rendered, but it is to be understood that such tests are for information only and that any preliminary approval based thereon shall not be construed as a guaranty for acceptance of any material that may be delivered later for incorporation into the work.

Only the materials actually delivered for the work will be evaluated, and their acceptance or rejection will be based solely on the results of the tests prescribed in the Specifications.

The Contractor shall assume full responsibility for the furnishing of uniform and satisfactory materials. When materials are obtained from local deposits, the Contractor shall be responsible for any losses or damages resulting from the opening and operation thereof, or from the failure of the deposit after development to produce acceptable materials.

108.2 Substitution of Materials

Certain materials are specified by manufacturer in order to establish standards of quality, not to limit competition. Where an item of material is specified to be a certain manufacturer's make, then the Bidder's Proposal shall include such material as specified unless approved otherwise.

Up to seven (7) days prior to the bid date, a bidder or manufacturer may request approval in writing of an item of material by submitting adequate product data to the Engineer for evaluation. Included with the product data shall be a list of five (5) or more similar projects where the product has been used under similar conditions. The list of projects shall include their location and the name and phone number of the owner's representative. The substitute product shall have been in place for a minimum of three (3) years at each location. Notice of approval shall be given only by an addendum issued by the Engineer. No verbal or other written approval will be given.

Within ten (10) days after award of Contract, the Contractor may submit alternate proposals for other kinds of material that they consider equal to those specified. These proposals for substitute products shall be submitted in writing to the Engineer for evaluation. There shall be included all pertinent product data and samples thereof as well as a listing of five (5) or more similar projects where the product has been used under similar conditions. The list of projects shall include their location and name and phone number of the owner's representative. The substitute product shall have been in place for a minimum of three (3) years at each location. Any cost differences shall be included with submittal. If the requested change is acceptable to the Engineer, then a change order will be prepared. If the requested change is not acceptable, the Contractor shall be obligated to furnish the item as specified.

108.3 Plant Inspection

The Engineer may undertake the inspection of materials at the plant (point of manufacture or source of supply) or another agency may be designated for the purpose.

In the event plant inspection is undertaken, the following conditions shall be met:

A. The Engineer shall have the cooperation and assistance of the Contractor and producer.

B. The Engineer shall have free entry at all times to such parts of the plant as may involve the manufacture or production of the materials being furnished.

C. If required by the Engineer, the Contractor shall arrange for acceptable workspace in or near the plant for use by the Inspector. Such space shall be independent of space used by the material producer.

D. The Contractor shall give the Engineer sufficient advance notice of production schedules to permit making necessary arrangements.

E. Adequate safety measures shall be provided and maintained.

The right is reserved by the City to retest or reinspect plant-inspected materials after delivery to the jobsite and to reject any materials that are found not to comply with contract requirements.

108.4 Samples and Tests

To ascertain if materials comply with contract requirements, samples shall, at the discretion of the Engineer, be taken at the source or at job destination, and as often as the Engineer deems it advisable or necessary. The taking of samples shall be in accordance with standard practices, except where methods and procedures for sampling a material are set forth in the Specifications.

The Contractor shall furnish without charge all samples required by the Engineer and shall afford such facilities as may be required for collecting and forwarding them. The Contractor may be required to furnish, when requested by the Engineer, a written statement giving the origin, composition or process of manufacture of a material.

In lieu of making tests, the Engineer may, in the case of commercial products, accept the manufacturer's Certified Report of Test of Analysis or a Certificate of Compliance. The samples for the tests or analyses report in the Certified Report of Test or Analysis may be those normally obtained in a formal product quality control program or obtained to represent the specific lot of material furnished when no formal control program is in effect, or those required to be obtained by Specifications.

Unless otherwise provided in the Contract, it shall be the intent of these Specifications that conformity of materials to the specified requirements shall be at the time, or just prior to the time, they are incorporated into the work.

All tests shall be made in accordance with the methods described and designated herein or in the Contract. Unless otherwise designated, reference to various standard specifications and test methods shall be understood to mean the specifications or test method that is current on the date of advertisement of bids.

Sampling and testing personnel shall have personnel that are ACI-certified to perform sampling, testing, and documentation.

108.5 Shop Drawings

When specified in the Specifications and prior to fabrication or installation, the Contractor shall submit shop drawings for approval directed to the Engineer.

Shop drawings shall include layout details, schedule, setting instructions, and manufacturer's literature. Shop drawings shall be identified with the name of project numbered consecutively and bear the stamp of approval of the Contractor as evidence that all drawings have been checked by the Contractor for accuracy and compatibility with Contract requirements. Drawings not checked and noted will be returned without being examined. Shop drawings for each part of work shall be complete in one submittal; partial submittals will not be considered.

If information on previously submitted drawings is altered, in addition to the notations made by the Engineer, the Contractor shall bring all changes to the attention of the Engineer. Corrections or changes indicated on reviewed shop drawings shall not be considered an order for extra work.

Shop drawings will not be considered reviewed unless they bear the stamp of approval and signature of the Engineer. Drawings will be reviewed for general design only. Dimensions and fit of units of various parts and components shall be the Contractor's responsibility.

Failure to submit required information at or prior to the preconstruction meeting could delay the start of the Contract. A delay in the Contract start date due to late submittals will not be grounds for a completion date extension.

108.6 Storage of Materials

Materials shall be so stored as to insure the preservation of their quality and suitability for the work. Stored materials, even though approved before storage, shall be subject to inspection prior to their use in the work and shall meet the requirements of the Contract at the time they are used. Stored materials shall be located so as to facilitate inspection. With the Engineer's approval, portions of the right-of-way not required for public travel may be used for storage purposes for materials and equipment. The Contractor shall provide any additional space required for storage at the Contractor's expense.

All materials or equipment to be used in construction shall be stored on site or at a Contractor's site, but not on private property. If material or equipment is stored outside of the right-of-way or construction work limits, the Contractor shall supply the Engineer with written notice of agreement with the appropriate landowner(s) including a restoration plan. A reasonable amount of material or equipment that will be used immediately during construction may be stored adjacent to the work site, but only to the extent that is absolutely necessary to avoid delay in construction. Temporary erosion control measures (silt fences, erosion bales, rock filled erosion control bags, or inlet protection) shall be used around or down grade of all stockpiled topsoil, crushed stone, fill material, and/or borrow material.

108.7 Defective Materials

All materials that are not in conformity with the requirements of the Specifications shall be considered defective and shall be rejected. Contractor shall remove rejected materials from the site of the work unless otherwise permitted by the Engineer. Any defective materials that have been subsequently corrected shall not be used or accepted until reevaluated and approved by the Engineer.

Materials that have been incorporated in the work and subsequently found to be defective may be left in place with the permission of the Engineer, after the Engineer's determination of materials produced are acceptable. An appropriate deduction will be made in the contract price for such materials or for the work in which such defective materials are incorporated.

108.8 Care of Materials Supplied by City

The Contractor shall be responsible for the care and protection of all materials furnished to the work site by the City.

The Contractor shall inspect all materials upon delivery and shall immediately notify the Engineer if any is found defective. The City will substitute new material for any defective material.

108.9 Operations and Maintenance Manuals

When specified in the Specifications, the Contractor shall provide the Engineer with three (3) Operation and Maintenance Manuals covering each item of equipment installed under the Contract. Manuals shall be delivered to the Engineer for approval prior to job completion. Final payment will not be made until manuals have been received and approved.

Page Intentionally Left Blank

SECTION 109

MEASUREMENT AND PAYMENT

109.1 Measurement of Quantities

All work completed under the Contract will be measured by the Engineer according to the United States customary units. The method of measurement and computations to be used in determination of quantities of material furnished and of work performed under the Contract will be those specified for the various items elsewhere in the Standard Specification, special provisions, or methods generally recognized as conforming to good engineering practice.

The completed work will be measured for final payment by the Engineer to determine the quantities of such items of work performed, except when contract change orders have been executed providing for other methods of measurement. The Contractor will be paid for the actual amount of work performed in accordance with the Contract, as shown by the final measurements or upon the basis of plan quantities.

109.2 Accuracy of Pay Units

Quantities of pay items are measured and reported by the unit of measure, such as cubic yard, linear foot, square foot, ton, each, etc., as designated in the contract for the particular item. The engineer is to accurately measure constructed contract items and carefully check the computations before submittal of each pay estimate.

Report measured items to the nearest full unit of measure in each progress payment unless otherwise specifically required in the contract or listed in the following table. Quantities for items listed in the table should be reported in the pay estimate to the nearest indicated decimal. In any case, measure subtotals to any decimal of a unit commensurate with accuracy and value, and round the totals to the reporting decimal or whole unit for payment.

Table – Accuracy of Pay Units

Item	Unit	Accuracy
Clearing or Grubbing; Roadside Clearing	ACRE	0.01
Asphaltic Material, Asphaltic Pavement	TON	0.1
Concrete Masonry	CY	0.1
Concrete Pavement Approach Slab	SY	0.1
Concrete Surface Drains	CY	0.1
Sanitary/Storm Sewer Pipe	LF	0.1
Sanitary/Storm Sewer Structure	VF	0.1
Fertilizer	CWT	0.1
Mulching	TON	0.1

109.3 Application for Payment

Once each month (provided that a payment of $10,000 or more becomes due, which amount may at the discretion of the Engineer be reduced for contracts of $50,000 or less) the Contractor will prepare an estimate of the quantities of work performed and the value thereof at Contract or

agreed unit or lump sum prices. The estimate and application for payment shall be prepared on forms provided by the Engineer. The City will issue a partial payment after review and acceptance of the estimate by the Engineer.

109.4 Scope of Payment

The Contractor shall accept the compensation, as herein provided, in full payment for furnishing all materials, labor, tools, and equipment necessary for performing all work contemplated and embraced under the Contract; also for loss or damage arising from the nature of the work or from the action of the elements, or from any unforeseen difficulties which may be encountered during the prosecution of the work until the final acceptance by the Engineer; and for all insurance, compensation and risks of every description connected with the prosecution of the work; also for all expenses incurred in consequence of the suspension or discontinuance of the work as herein specified; and for any infringement of patent, trademark, or copyright; and for completing the work according to the contract.

The payment of any current estimate prior to final acceptance of the work by the City shall in no way constitute an acknowledgement of the acceptance of the work nor in any way prejudice or affect the obligation of the Contractor to repair, correct, renew or replace any defects or imperfections in the construction or in the strength or quality of the materials used in or about the construction of the work under Contract and its appurtenances, or any damage due or attributable to such defects, which defects, imperfections or damage shall have been discovered on or before the final inspection or acceptance of the work. The Engineer shall be the sole judge of such defects, imperfections or damage and the Contractor shall be liable to the City for failure to correct the same as provided herein.

In accordance with Section 779.15 of the Wisconsin Statutes no monies, payable under the Contract, or any part thereof, shall become due and payable until the Contractor shall satisfy to the City that they have fully settled or paid for all materials and equipment used in or upon the work and labor done in connection therewith, and the City, if it so elects, may pay any or all such bills, wholly or in part, and deduct the amount or amounts so paid from any partial or final estimate, excepting the first estimate.

109.5 Partial Payments

Partial payments based on the value of the work performed or materials furnished, at Contract or agreed unit or lump sum prices, will be made to the Contractor as the work progresses, except that partial payments will not be made as long as the Contractor fails to comply with any order given the Contractor by the Engineer in accordance with the Contract.

The quantities included shall be computed to reflect the approximate amount of work completed, or substantially completed under each of the pertinent Contract items to the date of the estimate less, in each case, an allowance adequate to cover contingencies and costs still to be incurred incident to finishing, maintaining, repairing and restoring the work, and to cover possible variations between the Contract and final quantities in instances where Contract quantities are used as a basis for the estimate.

The Engineer may, upon presentation by the Contractor of receipted, bills, freight bills or other satisfactory evidence of payment, include in the estimate prepared for partial payment the value

of nonperishable materials that are to form a part of the completed work, produced or purchased, and delivered and stored in the vicinity of the work at such location where they will be available for ready incorporation into the work. The amounts paid for materials shall be deducted from the amount of other partial or final payments due to the Contractor for the work performed as the materials are incorporated into the completed work.

From the total amount of the estimate, determined as provided above, there shall be deducted an amount equal to 5% of said estimate to be retained by the City until 50% of the work has been completed. At 50% completion, further partial payments shall be made in full to the Contractor and no additional amounts may be retained unless the Engineer certifies that the job is not proceeding satisfactorily, but amounts previously retained shall not be paid to the Contractor until after the completion of the entire contract and final acceptance of the work.

Should any defective work or material be discovered, or should a reasonable doubt arise as to the integrity of any part of the work completed previous to the final acceptance and payment, there will be deducted from the first estimate rendered after the discovery of such work an amount equal in value to the defective or questioned work, and this work will not be included in a subsequent estimate until the defects have been remedied or the causes for doubt removed.

All material and work covered by partial payments made thereupon become the property of the City, but this provision shall not be construed as relieving the Contractor from the sole responsibility for all materials and work upon which payments have been made or the restoration of any damaged work, or as a waiver of the right of the City to require the fulfillment of all terms of the contract.

109.6 Overpayments and Setoffs

The Contractor shall promptly, upon receipt of written notice from the Engineer, refund any overpayments received thereby. Should Contractor not timely comply with said request, Contractor shall pay interest for said amount at the rate of one (1%) percent per month on the unpaid balance, until paid in full.

Where any deductions from forfeitures of payment in connection with work under the Contract are duly and properly declared or imposed against the Contractor, in accordance with the terms of the Contract, State laws or Ordinances of the City, the total amount thereof may be withheld from any money whatsoever due or to become due the Contractor under the Contract, and when deducted shall be deemed and taken as part in such amount.

109.7 Final Waiver of Liens

At the completion of the Contract, and prior to final payment, the Contractor shall submit signed final Waivers of Lien, on a form acceptable to the Engineer, for themselves, subcontractors and material suppliers.

109.8 Acceptance and Final Payment

When the project has been completed and accepted by the Engineer, the Engineer will prepare the final estimate of the quantities of the various classes of work performed. After the

Contractor reviews and accept the estimate, and after acceptance of the project by the City Council, the Contractor will be paid the entire sum found to be due after deducting all previous payments and all amounts to be deducted under the provisions of the Contract.

All prior partial estimates and payments shall be subject to correction in the final estimate and payment.

The making of final payment shall not release the surety nor constitute a waiver of rights by the City. The guarantee in Subsection 105.14 is cumulative and not exclusive.

DIVISION 2

CONTAMINATED SOIL, DEMOLITION & STRUCTURES

SECTION 201

BUILDING DEMOLITION

201.1 General

This work shall consist of razing and removing of buildings, disposing of the resulting materials, and the filling of basements and excavated areas.

The Contractor must obtain the necessary razing permits from the City of Green Bay Building Inspection Department prior to the commencement of demolition work.

201.2 Materials

Furnish granular material for filling excavated areas meeting the following gradation:

95-100% passing 3-inch sieve
< 10% passing No. 200 sieve

201.3 Construction Methods

A. Utility Piping

All utility piping, basement drains, sewers and the like shall be cut off at the property line and permanently bulkheaded by a method approved by the Engineer. No moving or razing operations may begin until the Engineer or City Plumbing Supervisor approves all bulkheads.

B. Breaking Down

In the buildings that have common walls with occupied buildings, or with buildings not included in the contract; the exterior walls, interior partitions, and other supports shall be removed floor-by-floor. If a building is freestanding or has common walls with vacant buildings that are part of the contract, then the entire building may be razed at one time. At no time shall all horizontal support from exterior walls or partitions be removed so as to permit the walls to stand unsupported.

All exterior walls, interior bearing walls, ground level floors, basement floors, foundation walls, and partitions shall be completely removed. All existing concrete walkways, steps, and entrance slabs within the property limits shall also be removed.

The Contractor shall take the necessary precautions to protect all common walls of occupied buildings and of buildings not part of the contract. The Contractor is responsible for any damage to these common walls.

Streets, alleys, and private property shall be adequately protected by erecting proper fences, scaffolds, planking, guardrails, and toe-boards, to prevent the falling of debris on sidewalks or streets. All protective devices shall be approved by the Engineer, and shall be in place prior to the razing of any building.

C. Hazardous Waste

Any material encountered by the Contractor that is classified as a hazardous waste by the Wisconsin Department of Natural Resources must be reported to the City for proper separation, containment, and disposal.

D. Air Quality

The Contractor shall make every effort to keep construction dust to a minimum as required by the Wisconsin Administrative Code and directed by the Engineer. In accordance with Chapter NR 154 of the Wisconsin Administrative Code, the Contractor must notify the Wisconsin Department of Natural Resources of his intention to demolish the buildings 20 days prior to commencement of the demolition. In all phases of the demolition, the Contractor must follow the Wisconsin Administrative Code.

E. Disposable Material

All demolition waste and all salvageable material, other than that stated specifically to remain the property of the City, is the property of the Contractor and must be removed from the premises. Excessive accumulation of either salvageable material or demolition waste will not be permitted. All materials shall be disposed of by the Contractor in consistency with ordinances of the City of Green Bay and Brown County, and with regulations set forth in the State of Wisconsin Administrative Code.

F. Filling Basements and Excavated Areas

All loose material and debris shall be removed from the basement and other excavated areas. Unfilled basements and other excavated areas shall be immediately barricaded and fenced off the same day in a manner acceptable to the City. Upon ascertaining that all openings, pipelines, drains, etc., have been properly capped, the basements and all excavated areas shall be filled as soon as possible to within four (4) inches of the existing grade with granular material.

The backfill shall be placed in layers of eight (8) inches or less and shall be compacted with mechanical compaction equipment to not less than 95% of maximum density established in accordance with ASTM Designation D 1557-70 (Modified Proctor). The final four (4) inches of fill over excavated areas shall be topsoil meeting the requirement of SECTION 801 TOPSOIL, followed with seed and mulch meeting the requirements of SECTION 804 SEEDING.

201.4 Measurement and Payment

The contract lump sum price for razing and removal of the building or buildings shall be payment in full for razing, removing, salvaging when required, disposing of surplus material, filling basements and excavated areas, and for furnishing all labor, tools, equipment and incidentals necessary to complete the work.

The City will pay for measured quantities at the contract unit price under the following bid item:

ITEM #	DESCRIPTION	UNIT
201.01	Removing Building	LS
201.02	Site Clearance (Parcel)	LS

Page Intentionally Left Blank

SECTION 202

EXCAVATION OF CONTAMINATED SOILS & WATER

202.1 General

This work shall consist of excavating, hauling to a designated location on or near the project, properly stockpiling contaminated soils and water excavated or collected from dewatering from the project area, and storing and hauling contaminated water from the project area to a facility that accepts it.

202.2 Materials

Vacant

202.3 Construction Methods

The Contractor shall notify the Engineer at least three working days prior to excavating in any potentially contaminated area.

The Contractor shall notify the Engineer upon discovery of contaminated soil or water, and immediately stop excavation at that location. The Engineer will instruct the Contractor how and when to proceed with excavation in the contaminated area. No contaminated soil or water shall be removed without prior approval from the Engineer.

A. Contaminated Soil

The Contractor shall excavate, segregate, haul and stockpile all contaminated soil as directed by the City's Environmental Consultant and temporarily stockpile as directed until the sample results are returned. The soils will then be disposed of accordingly.

The City's Environmental Consultant will collect soil samples from the bucket of the excavation equipment where required. The Contractor shall assist the Environmental Consultant in collection the soil samples using excavation equipment. Samples may be collected and examined at greater frequency during the excavation of contaminated soil. Examination of the soil samples shall be performed in the field and at a laboratory. Disturbed areas shall be kept to the minimum size requires to safely and adequately meet the excavation requirements. The Environmental Consultant will inform the Contractor and the Engineer whether or not the excavation soils is to be managed as "contaminated" following the field analysis of the samples. Soil that is removed, and that is determined by the Environmental Consultant not to be contaminated shall be managed by the Contractor as general fill material. All contaminated soil shall be hauled to and stockpiled at a location on-site as determined by the Engineer. Any truck transporting contaminated soil shall have the proper license as required by the Department of Natural Resources. The Contractor shall provide the City with copies of the licenses prior to the preconstruction meeting.

The Contractor shall place polyethylene sheeting on the uncontaminated ground prior to stockpiling the contaminated soil and at the end of each day cover the contaminated soil pile with polyethylene sheeting. The polyethylene sheeting shall be placed, overlapped and secured in a manner, which will prevent the contact of contaminated soil with the underlying soil. The polyethylene sheeting furnished by the Contractor, shall be free of punctures and have a six (6) mil minimum thickness.

A separate Contractor will be hired by the City of Green Bay to dispose of the contaminated soils. That Contractor will be responsible for loading the stockpiled soil and permanent disposal.

B. Contaminated Water

The Contractor shall provide and maintain adequate dewatering equipment to remove and dispose of contaminated groundwater from the excavation where encountered. All groundwater pumped shall be containerized and hauled by a licensed hauler to a facility capable of treating the contaminated water. No impacted groundwater shall be discharged into the City's storm or sanitary sewer. The Contractor shall provide the City with copies of all laboratory results and certification of proper treatment and disposal of all contaminated groundwater.

The City's Environmental Consultant will collect water samples when required. The Contractor shall assist the Environmental Consultant in collection the soil and water samples using the excavation equipment. Samples may be collected and examined at a greater frequency during the excavation of contaminated soil. Disturbed areas shall be kept to the minimum size required to safely and adequately meet the excavation requirements.

C. Health and Safety

The Contractor shall prepare a site-specific health and safety plan complying with the Occupational Safety and Health Administration (OSHA) standard for Hazardous Waste Operation and Emergency Response (HAZWOPER), 29 CFR 1910.120. The plan shall be in accordance with EPA Standard Operation Safety Guidelines (November 1984). Potential chemical hazards include the following compounds: benzene, ethyl benzene, toluene, and xylenes. The plan will provide specifics on training personnel requirements including the designated "site supervisor".

All site workers taking park in remediation activities shall have completed health and safety training that meets OSHA requirements.

Site-specific health and safety plan and certificates of health and safety training shall be submitted to the Engineer prior to the start of any construction.

202.4 Measurement and Payment

The volume of contaminated soil will be measured in its original position. When measured in its original position, the quantity will be calculated by the average end area or truncated prism method. For minor quantities of petroleum impacted soil, where the above method is deemed impractical by the Engineer, the measurement will be made by the cubic yard in the vehicle.

The volume of contaminated soil, measured as provided above, will be paid for at the contract unit price per cubic yard for Handling contaminated soil, which price shall be full compensation for loading, hauling and dumping contaminated waste at the designated stockpiling location; for furnishing and placing polyethylene sheeting, and for all labor, tools, equipment and incidentals necessary to complete the work. The excavation cost for soil removal shall be included in the price per lineal foot of sewer, manhole or water main installation.

The volume of contaminated water will be measured per gallon for dewatering and handling contaminated groundwater, which shall be full compensation for pumping, storage, handling, hauling, treatment and disposal; for all labor, tools, equipment and incidentals necessary to complete the work.

The City will pay for measured quantities at the contract unit price under the following bid items:

ITEM #	DESCRIPTION	UNIT
202.01	Excavation of Contaminated Soil	CY
202.02	Handling Contaminated Groundwater	GAL

Page Intentionally Left Blank

SECTION 203

CONCRETE BRIDGES

203.1 General

Perform work in accordance with the provisions of WisDOT Standard Specifications for Highway and Structure Construction Section 502 and 514 except as hereinafter modified.

This section describes the replacement of the existing Compression Joint Seal, Seal vertical cracks in the abutments according to the plan details and as hereinafter provided, and the replacement of the existing cove sealants.

203.2 Materials

A. Compression Joint Sealer

The compression joint seal shall be as stated below or an approved equal.

Product	Specification
Compression Joint Seal	EMSEAL Bridge Expansion Joint System (BEJS)
Silicone Sealant	Pecora 301
Epoxy Adhesive	Sikadur 31 HI Mod Gel

B. Epoxy Crack Sealing

Furnish a penetrating epoxy sealant manufactured by Sika, Adhesive Engineering, Technical Sealants, Dayton Superior, or equal. Before using, obtain the Engineer's approval for the epoxy system which is proposed to seal the cracks.

C. Cove Sealant

The material used for cove sealants shall be a multi-component urethane sealant meeting Federal Spec TT-S-00227E and/or ASTM C920. It shall be gray in color, with a minimum of 5 years of successful field usage on various buildings. It shall be able to withstand movement up to 25 percent extension and 25 percent compression. The primer used shall be compatible with the sealant. The following list contains acceptable repair products for use. These products, or an approved equal, shall be used on this portion of the project.

a. Sika-Flex-2c NS/SL by Sika Corporation
b. Sonolastic SL2 by Sonneborn Building Products
c. Vulkem 922 by Mameco International, Inc.
d. Eucolastic II by Euclid Chemical Company
e. FX-550/FX-551 by Fox Industries
f. THC-900/THC-901 by Tremco

203.3 Construction Methods

A. Compression Joint Sealer

Follow 502.3.6.3.2 (1)(2)(3)(4)(6) of the WisDOT Standard Specifications along with the manufacturer's recommendations for installation of the joint sealer. Fill in the expansion joint slot with the epoxy adhesive and let dry prior to installing the joint seal.

B. Epoxy Crack Sealing

Before sealing, clean the cracks by chipping and by using high-pressure air. After all of the cleaning is completed, inject epoxy sealant into the cracks to be sealed. Seal the cracks using the penetrating epoxy sealant as recommended by the sealant manufacturer.

C. Cove Sealant

Cove sealants shall be installed as described herein at perimeter walls, stair tower walls, column bases, curb bases or other areas where a vertical surface intersects a horizontal surface. The Engineer will designate those areas to receive cove sealant.

The Contractor shall thoroughly clean and prime the areas to be coved to ensure adequate bond between the sealant and prepared surfaces. The extent of the cleaning necessary to remove all foreign matter should be as recommended by the manufacturer. Any existing coving material shall be completely removed. After the surfaces have been properly prepared, the Contractor shall apply a minimum ½ inch cove (cant) sealant, tooling it to ensure full contact and a workmanlike finish. Clean off excess sealant from adjacent surfaces as work progresses.

203.4 Measurement and Payment

Payment for the Concrete Masonry Bridges bid items also include the Contractor is fully responsible for any crack repairs in the concrete that occur within the two-year guarantee. Cold weather protection will be considered incidental to Concrete Masonry Bridges.

The City will measure Compression Joint Seal by the linear foot acceptably completed. Payment for the Compression Joint Seal bid item is full compensation for providing the seal, cleaning the existing expansion joint with the removal of the existing seal, installation, the silicone sealant and the epoxy adhesive.

The City will measure Protective Surface Treatment by the square yard acceptably completed. Payment for the Protective Surface Treatment bid item is full compensation for application of both protective surface treatment and pigmented surface sealer, for treating and sealing surfaces including surface preparation and color-matching as required. Resealing after pavement marking is incidental to the applicable pavement marking bid item.

The City will measure Cove Sealant by the linear foot acceptably completed. Payment is full compensation for removing the concrete masonry; cleaning the concrete surfaces, and for properly disposing of all materials. A written warranty shall be provided warranting that all sealant shall remain in serviceable, watertight, elastic, adhesive condition for a period of three (3) years from date of final acceptance of work. Any defects, imperfections, or failures, which may develop during the warranty period, and other work damaged thereby, shall be repaired or replaced at no additional cost to the owner.

The City will pay for measured quantities at the contract unit price under the following bid items:

ITEM #	DESCRIPTION	UNIT
203.01	Concrete Masonry Bridges	CY
203.02	Compression Joint Sealer	LF
203.03	Protective Surface Treatment	SY
203.04	Epoxy Crack Sealing	LF
203.05	Cove Sealant	LF
203.06	Adjusting Floor Drains	EACH

Page Intentionally Left Blank

SECTION 204

STEEL REINFORCEMENT AND STEEL BRIDGES

204.1 General

Perform work in accordance with the provisions of WisDOT Standard Specifications for Highway and Structure Construction Section 505 and 506 except as hereinafter modified.

Furnish, fabricate and erect all structural and miscellaneous steel as shown in the plans and specified herein. Perform all work of this item in accordance to all applicable requirements of WisDOT Standard Specifications, except as modified herein or shown in the plans.

1. The work includes, but not limited to, the following items:
    a. Protection Angle Armor
    b. Median and Sidewalk Plates
    c. All stud shear connectors
    d. Any other fabricated steel shown in the plans but not specifically listed above, unless an item is specifically included in another bid item

204.2 Materials

Vacant

204.3 Construction Methods

Vacant

204.4 Measurement and Payment

The City will pay for measured quantities at the contract unit price under the following bid items:

ITEM #	DESCRIPTION	UNIT
204.01	Bar Steel Reinforcement HS Structures	LB
204.02	Bar Steel Reinforcement HS Coated Structures	LB
204.03	Structural Steel Carbon	LS

Page Intentionally Left Blank

SECTION 205

CONCRETE OVERLAYS AND STRUCTURE REPAIR

205.1 General

Perform work in accordance with the provisions of WisDOT Standard Specifications for Highway and Structure Construction Section 509 except as hereinafter modified.

205.2 Materials

Vacant

205.3 Construction Methods

Vacant

205.4 Measurement and Payment

The City will pay for measured quantities at the contract unit price under the following bid items:

ITEM #	DESCRIPTION	UNIT
205.01	Preparation Approaches	SY
205.02	Preparation Decks Type 1	SY
205.03	Preparations Decks Type 2	SY
205.04	Full-Depth Deck Repair	SY
205.05	Cleaning Decks	SY
205.06	Cleaning Approaches	SY
205.07	Concrete Surface Repair	SF
205.08	Joint Repair	SY
205.09	Curb Repair	LF
205.10	Concrete Masonry Overlay Decks	CY
205.11	Concrete Masonry Overlay Approaches	CY

Page Intentionally Left Blank

SECTION 206

RAILING

206.1 General

Perform work in accordance with the provisions of WisDOT Standard Specifications for Highway and Structure Construction Section 513 except as hereinafter modified.

206.2 Materials

Vacant

206.3 Construction Methods

Vacant

206.4 Measurement and Payment

The City will pay for measured quantities at the contract unit price under the following bid items:

ITEM #	DESCRIPTION	UNIT
206.01	Railing Pipe	LF
206.02	Railing Tubular (Type)	LF
206.03	Railing Steel (Type)	LF
206.04	Railing Steel Pedestrian (Type)	LF

Page Intentionally Left Blank

SECTION 207

BRIDGE PAINTING

207.1 General

Perform work in accordance with this provision as describes surface preparation and painting of the metal surfaces in accordance to the manufacturer's recommendations and as hereinafter provided.

207.2 Materials

A. Structure Repaint Recycle Abrasive

Furnish a complete coating system from the City's approved list for "Structure Repainting Recycle Abrasive Structure". The color for the finish coating material shall match the color number shown on the plans in accordance with Federal Standard Number 595B, as printed in 1989. Supply the Engineer with the product data sheets for approval before any coating is applied. The product data sheets shall indicate the mixing and thinning directions, the recommended spray nozzles and pressures, and the minimum drying time between coats.

The color of the primer must be such that a definite contrast between it and the color of the blasted steel is readily apparent. There shall be a color contrast between all subsequent coats for the paint system selected. Submit color samples of the primer and all coats to the Engineer for approval prior to any application of paint.

207.3 Construction Methods

A. Structure Repaint Recycle Abrasive

Surface Preparation

Prior to blast cleaning, solvent clean all surfaces to be coated in accordance to SSPC-SP1. All metal surfaces must be blast cleaned in accordance with SSPC-SP10 and verified prior to painting.

Upon completion of surface preparation, test representative surfaces, which were previously rusted (i.e. pitted steel) for the presence of residual chloride. Perform Surface Contamination Tests (SCAT) in accordance with the manufacturer's recommendations. The tests must be witnessed by the Engineer. If chlorides are detected at levels greater than 7ug/cm2, continue to clean the affected areas until results are below the specified limit. Submit anticipated testing frequencies and chloride remediation methods to the Engineer for review and approval.

Apply the prime coat the same day that the metal surfaces receive the No. 10 blast or re-blast before application. Cleaned surfaces shall be of the specified condition immediately prior to paint application. If rust bloom occurs prior to applying the primer, stop the painting operation in the area of the rust bloom and re-blast and clean the area to SSPC SP-10 prior to applying the primer.

The steel grit and any associated equipment brought to the site and used for blast cleaning shall be clean. Remove immediately dirty grit or equipment brought to the site at no expense to the City. Furnish an abrasive that has a gradation such that it will produce a uniform surface profile between 1 to 3 mils on the steel surface, as measured in accordance with ISO 8503-5.

The abrasive blasting and recovery system shall be a completely integrated self-contained system for abrasive blasting and recovery. It shall be an open blast and recovery system that will allow no emissions from the recovery operation. The recovery equipment shall be such that the amount of contaminants in the clean recycled steel grit shall be less than 1 percent by weight as per SSPC AB-2.

Remove by grinding all fins, tears, slivers, and burred or sharp edges that are present on any steel member, or that appear during the blasting operation, and re-blast the area to give a 1 to 3 mils surface profile.

Remove all spent material and paint residue from steel surfaces with a good commercial grade vacuum cleaner equipped with a brush-type cleaning tool, and test cleanliness in accordance with ASTM D4285. The airline used for surface preparation shall have an in-line water trap and the air shall be free of oil and water as it leaves the airline.

Take care to protect freshly coated surfaces from subsequent blast cleaning operations.
Thoroughly wire brush the damaged primed surfaces with a non-rusting tool, or if visible rust occurs, re-blast to a near white condition. Clean and re-prime the brushed or blast cleaned surfaces in accordance with this specification.

Coating Application

Apply paint in accordance to the manufacturer's recommendations in a neat workmanlike manner. Paint application shall normally be by airless spray or inaccessible areas by brush, roller or other methods approved by the Engineer.

The Engineer may allow the use of conventional spray equipment after satisfactory demonstration by the Contractor of the proper application technique and handling of that equipment.

Mix the paint or coatings in accordance to the manufacturer's directions to a smooth lump-free consistency. Keep paint thoroughly mixed during the painting application. After the inspector approves the entire cleaned surface to be coated, apply a prime coat uniformly to the entire surface. Either before or after applying the prime coat, brush or spray a stripe coat of primer on all plate edges, bolt heads, nuts, and washers. Apply succeeding coats as the product data sheet shows.

Remove all dry spray by vacuuming, wiping, or sanding if necessary.

If the application of the coating at the required thickness in one coat produces runs, bubbles, or sags; apply a “mist-coating” in multiple passes of the spray gun; separate the passes by several minutes. Where excessive coating thickness produces “mud-cracking”, remove such coating back to soundly bonded coating and re-coat the area to the required thickness.

The resultant paint film shall be smooth and uniform, without skips or areas of excessive paint in accordance with SSPC PA1.

The coating is supplied for normal use without thinning. If in cool weather it is necessary to thin the coating for proper application, thin in accordance to the manufacturer’s recommendations.
During surface preparation and coating application the ambient and steel temperature shall be between 39 degrees F and 100 degrees F. The steel temperature shall be at least 5 degrees F above the dew point temperature. (This requires the steel to be dry and free of any condensation or ice regardless of the actual temperature of the steel.) The relative humidity shall not exceed 85%. The manufacturer’s ambient condition requirements must be followed if they are more stringent.

Paint thickness shall be within the requirements for a three coat paint system listed in WisDOT’s approved list for Structure Repainting Recycle Abrasive Structure and the paint system being used.

Time to recoat shall be according to the manufacturer’s recommendations.

The dry film thickness will be determined by use of a magnetic film thickness gage. The gage shall be calibrated for dry film thickness measurement in accordance to SSPC-PA 2. Dry film thickness in each area measured will be based on an average of three gage readings, after calibration of the gage to account for surface profile of the bare steel as a result of surface preparation.

B. Cleaning and Painting Bearings

Inspection

On all structures in this contract, notify the Engineer of any missing or broken bolts or nuts, any missing or broken rivets, or of any cracks or flaws in the steel members while cleaning or painting.

Date Painted

At the completion of all painting work, stencil in black paint or contrasting color paint the date of painting the bridge. The numbers shall be three inches (75 mm) in height and shall show the month and year in which the painting was completed: e.g., 11-18 (November 2018). On each bridge painted, stencil the date at two locations. On truss bridges, stencil the date on the cover plates of end posts near and above the top of the railings at the oncoming traffic end. On steel girder bridges, stencil the date on the inside of the outside stringers at the abutments. The date on grade separation bridges shall be readable when going under the structure or at some equally visible surface near the ends of the bridge, as designated by the Engineer.

Graffiti Removal

Remove any graffiti on concrete abutments, piers, pier caps, parapet railings, slope paving or any other location at the direction of the Engineer. Use a brush sandblast to remove graffiti.
The above work will not be measured and paid for separately, but will be considered incidental to other items in the contract.

Repainting Methods

Do not perform blasting, cleaning and painting on days of high winds. Prevailing winds in excess of 15 mph (25 km/hr) shall be considered high winds. Place the final field coat of paint on the exterior of the exterior beams as a continuous painting operation. Stop at splices, vertical stiffeners or other appropriate locations so that lap marks are not evident or noticeable. Completely clean and remove spent abrasive and other waste materials resulting from the contractor's operation from bridge deck surfaces, gutter lines, drains, curbs, bridge seats, pier caps, slope paving, roadway below, and all structural members and assemblies.

Add the following to WisDOT Standard Specification 105.9:
Furnish, erect and move scaffolding and other appropriate equipment to permit the inspector the opportunity to closely observe all affected surfaces. The scaffolding, with appropriate safety devices, shall meet the approval of the Engineer.

207.4 Measurement and Payment

The City will measure Structure Repainting Recycled Abrasive as a single complete lump sum unit of work, completed in accordance to the contract and accepted. Payment is full compensation for preparing and cleaning the designated surfaces; furnishing and applying the paint; and for providing the listed equipment.

The City will pay for measured quantities at the contract unit price under the following bid items:

ITEM #	DESCRIPTION	UNIT
207.01	Structure Repaint Recycle Abrasive	LS
207.02	Cleaning and Painting Bearings	EACH

SECTION 208

SUPPLEMENTAL ITEMS FOR STRUCTURES

208.1 General

Perform work in accordance with the provisions of WisDOT Standard Specifications for Highway and Structure Construction Section 604, 629 except as hereinafter modified.

This section describes providing a containment system to prevent debris from structure removal, reconstruction, or other construction operations from falling onto facilities located under the structure. Using this containment system does not relieve the contractor of requirements under WisDOT Standard Spec 107.17 and WisDOT Standard Spec 107.19 or requirements under a US Army Corps of Engineers Section 404 Permit.

This section describes providing a dust collector to maintain a negative air pressure in the enclosure; furnishing and erecting enclosures as required to contain, collect and store waste material resulting from the preparation of steel surfaces for painting, and repainting, including collection of such waste material, and the labeling and storage of waste material in approved hazardous waste containers, all as hereinafter provided.

This section describes furnishing and maintaining weekly, or more often if needed, a single unit portable decontamination facility as hereinafter provided.

This section describes surface preparation and painting of the metal surfaces in accordance to the manufacturer's recommendations and as hereinafter provided.

208.2 Materials

A. Portable Decontamination Facility

Supply and operate all equipment in accordance with OSHA.

Supply adequate heating equipment with the necessary fuel to maintain a minimum temperature of 68˚F in the facility.

The portable decontamination facility shall consist of a separate "Dirty Room", "Shower Room", and "Clean Room". The facility shall be constructed so as to permit use by either sex. The facility shall have adequate ventilation.

The "Dirty Room" shall have appropriately marked containers for disposable garments, clothing that requires laundering, worker shoes, and any other related equipment. Each container shall be lined with poly bags for transporting clothing or for disposal. Benches shall be provided for personnel.

The “Shower Room” shall include self-contained individual showering stalls that are stable and well secured to the facility. Provide showers with a continuous supply of portable hot and cold water. The wastewater must be retained for filtration, treatment, and/or for proper disposal.

The “Clean Room” shall be equipped with secure storage facilities for street clothes and separate storage facilities for protective clothing. The lockers shall be sized to store clothing, valuable and other personal belongings for each worker. Benches shall be provided for personnel.

Supply a separate hand wash facility, either attached to the decontamination facility or outside the containment.

208.3 Construction Methods

A. Debris Containment

Prior to starting work, submit a debris containment plan to the Engineer for review.
Incorporate Engineer-requested modifications. Do not start work until the Engineer approves the debris containment plan.

Maintain adequate protection throughout construction for people and property within the potential fall zone. Ensure that a containment system capable of protecting underlying facilities from falling construction debris is in place before beginning deck repair, parapet removal, or other operations that may generate debris.

At least 15 working days before conducting potential debris generating operations, contact the following owners or lessees:

City of Green Bay
100 N Jefferson Street, Room 300
Green Bay, WI 54301
Telephone (920) 448-3100

B. Negative Pressure Containment & Collection of Waste Material

Erect an enclosure to completely enclose (surround) the blasting operations. The ground, slope paving, or roadway cannot be used as the bottom of the enclosure unless covered by approved containment materials. So that there are no visible emissions to the air or ground or water, design, erect, operate, maintain and disassemble the enclosures in such a manner to effectively contain and collect dust and waste materials resulting from surface preparation and paint over spray. Suspend all enclosures over water from the structure or as approved by the Engineer.

Construct the enclosure of flexible materials such as tarpaulins or of rigid materials such as plywood, or of a combination of flexible and rigid materials and meet SSPC Guide 6 requirements with Level 1 emissions. Systems manufactured and provided by Eagle Industries, Detroit Tarps, or equal, are preferred. The tarpaulins shall be a non-permeable material, either as part of the tarp system or have a separate non-permeable lining. Maintain all materials free of

tears, cuts or holes. The vertical sides of the enclosure shall extend from the bottom of the deck down to the level of the covered work platform or covered barge where used for structures over water, and shall be fastened securely to those levels to prevent the wind from lifting them. Bulkheads are required between beams to enclose the blasting area as approved by the Engineer. Where bulkheads are required, construct them of plywood and properly seal them. To prevent spent materials and paint over spray from escaping the enclosed area, overlap and fasten together all seams. Place groundcovers under all equipment prior to operations or as approved by the Engineer.

To allow proper cleaning, inspection of structures or equipment, and painting, provide safe adequate artificial lighting in areas where natural light is inadequate.

Provide a dust collector so that there are no visible emissions outside of the enclosure and so that a negative air pressure inside the enclosure is maintained. The dust collector shall be sized to maintain the minimum air flow based on the cross-sectional area of the enclosure.

A combination of positive air input and negative air pressure may be needed to maintain the minimum airflow within the enclosure.

Filter all air exhausted from the enclosure to create a negative pressure within the enclosure so as to remove all hazardous and other particulate matter.

After all debris has been removed and all painting has been approved in the containment area is complete, remove containment in accordance with SSPC Guide 6.

As a safety factor for structures over water, provide for scum control. Provide a plan for corrective measures to mitigate scum forming and list the procedures, labor and equipment needed to assure compliance. Effectively contain the scum that forms on the water and does not sink in place from moving upstream or downstream by the use of floating boom devices.

If in the use of floating boom devices the scum tends to collect at the devices, contain, collect, store the scum, and do not allow it to travel upstream or downstream beyond the devices. Remove the scum at least once a day or more often if needed.

Collect and store at the bridge site for disposal all waste material or scum collected by this operation, or any that may have fallen onto the ground tarps. Collect and store all waste material and scum at the end of each workday or more often if needed. Storage shall be in provided hazardous waste containers. Label each container as it is filled, using the labels provided by the Hazardous Waste Disposal contractor. Check the label and ensure that the project ID, bridge number and EPA ID match the structure. Fill in the generation date when the first material is placed in the container. Secure all containers at the end of each workday.

Keep the containers covered at all times except to add or remove waste material. Store the containers in an accessible and secured area, not located in a storm water runoff course, flood plain, or exposed to standing water.

In a separate operation, recover the recyclable abrasive for future application, and collect the paint and/or corrosion particles for disposal.

C. Refill & Reseal Crushed Aggregate Slope Paving

In accordance with WisDOT Standard Specification 604.3 include Add crushed aggregate slope paving in washout areas per direction of the Engineer. Clean all debris from the surface of the slope paving before applying asphalt. Apply sufficient asphalt so that it penetrates to seal the top two inches of aggregate; where existing asphalt is closer to the surface of the aggregate, apply less asphalt.

208.4 Measurement and Payment

The City will measure Debris Containment as a single lump sum unit of work for each structure acceptably completed. Payment is full compensation for furnishing, installing, maintaining, and removing a debris containment system.

The City will measure Portable Decontamination Facility by each individual unit acceptably completed.

The City will measure Negative Pressure Containment and Collection of Waste Materials as a single complete lump sum unit of work for each structure designated in the contract, completed in accordance with the contract and accepted. Payment is full compensation for designing, erecting, operating, maintaining, and disassembling the containment devices; providing negative pressure exhaust ventilation; collecting, labeling, and for storing spent materials in provided hazardous waste containers.

The City will measure Reseal Crushed Aggregate Slope Paving in area by the square yard of slope paving, acceptably resealed. Payment is full compensation for cleaning the surface; furnishing and placing slope paving crushed aggregate; furnishing and applying the asphalt.

The City will pay for measured quantities at the contract unit price under the following bid items:

ITEM #	DESCRIPTION	UNIT
208.01	Debris Containment	LS
208.02	Portable Decontamination Facility	EACH
208.03	Negative Pressure Containment & Collection of Waste Material	LS
208.04	Refill & Reseal Crushed Aggregate Slope Paving	SY

DIVISION 3

SITE WORK

SECTION 301

CLEARING & GRUBBING

301.1 General

This section corresponds with WisDOT Specifications Section 201 and is hereinafter modified.

301.2 Materials

Vacant

301.3 Construction Methods

All desirable and structurally sound trees, saplings, or shrubs outside of the construction limits that are suitable for shade or street beautification purposes shall be saved unless otherwise ordered by the Engineer. Trees, saplings, and shrubs designated to be left in place shall not be damaged or injured by the Contractor. The absence of specific orders to remove trees, saplings, or shrubs shall be considered as orders to save the trees, saplings, or shrubs. Trimming of limbs of trees or saplings or trimming of shrubs shall not be done without the permission of the Engineer.

Where trees cannot be felled without danger to traffic or injury to other trees, structures, or property, they shall be cut in sections from the top down.

Trees, brush, shrubs and vegetation shall be cut as nearly flush with the ground surface as is reasonably possible by means of tools ordinarily used for such operations.

All tree stumps and associated root systems shall be completely removed by excavation in areas under proposed concrete sidewalk, concrete curb and gutter, all types of pavement, permanent structures, and at such other places as directed by the Engineer. Tree stumps under other areas in the work zone may be removed with stump cutting machinery to a depth of at least eighteen inches below the original ground area in fill areas, and at least eighteen inches below the subgrade in cut areas.

All logs, limbs, brush, roots, stumps, stump chips, and other debris shall be removed from the site and disposed of in a manner and in a place subject to the approval of the Engineer.

301.4 Measurement and Payment

The City will determine tree diameter by measuring the circumference approximately 4 1/2 feet above the existing ground level, but above the ground swell, and dividing by 3. The City will determine stump diameter, for stumps not resulting from the contractor's clearing operations, by computing the average diameter of the stump top. This will include only those in-place trees or stumps with a 3-inch or greater diameter. The City will round circumference measurements and diameters to the nearest inch.

The City will pay for measured quantities at the contract unit price under the following bid item:

ITEM #	DESCRIPTION	UNIT
301.01	Clearing and Grubbing	ID
301.02	Clearing and Grubbing	STA
301.03	Clearing	ID
301.04	Clearing	STA
301.05	Grubbing	ID
301.06	Grubbing	STA

SECTION 302

REMOVALS

302.1 General

Perform work in accordance with the provisions of WisDOT Standard Specifications for Highway and Structure Construction Section 204 except as hereinafter modified.

302.2 Materials

Vacant

302.3 Construction Methods

Vacant

302.4 Measurement and Payment

Payment for removals includes full compensation for breaking down, removing, closing, plugging, or sealing; for removing and disposing of headwalls; for obtaining any required work permits; for hauling and disposing of materials; for providing any required bentonite, soil, brick, concrete block, or concrete; for restoring the roadway cross-section; and, unless the contract specifies granular backfill, for backfilling. If the contract specifies or the Engineer directs backfilling with granular backfill, the City will consider this material incidental to the removal items.

The City will pay for measured quantities at the contract unit price under the following bid items:

ITEM #	DESCRIPTION	UNIT
302.01	Removing Small Culvert Pipes	EACH
302.02	Removing Old Structure (station)	LS
302.03	Removing Pavement	SY
302.04	Removing Asphalt Surface	SY
302.05	Removing Asphalt Surface Milling	SY
302.06	Removing Asphalt Surface Milling	TON
302.07	Removing Curb	LF
302.08	Removing Curb & Gutter	LF
302.09	Removing Concrete Sidewalk & Driveway	SY
302.10	Removing Guardrail	LF
302.11	Removing Fence	LF
302.12	Removing Concrete Bases	EACH
302.13	Removing Brick Pavers	SY

Payment for the items in the section will not be paid separately for material specifically listed as incidental to other contract bid items.

Page Intentionally Left Blank

SECTION 303

EXCAVATION

303.1 General

Sections 205.3.1 thru 205.3.6 and 205.3.10 thru 205.3.15 of the WisDOT Specifications apply to the City of Green Bay Standard Specifications. The remainder of Section 205 does not apply.

Excavation: Excavation shall consist of excavating, loading, hauling and disposing of all material of every description encountered in the performance of the work, other than specific materials that have been identified with a bid item in the contract. The work shall include trimming and finishing the roadway, and maintaining such work in a finished condition until acceptance. If the contract does not include separate bid items for specific removals or excavations, such as Removing Pavement, Removing Concrete Sidewalk, or Stripping Topsoil, etc., the removal and disposal of any encountered material shall be included in the Excavation bid item.

Excavation Below Subgrade: Excavation Below Subgrade shall include excavating and disposing of materials as specified and filling the excavated areas with breaker run stone as directed by the Engineer. The breaker run stone is incidental to the item Excavation Below Subgrade.

Extra Excavation: Extra excavation of road base shall be required when the distance between the curb and trench or the distance between trenches is 3 feet or less. This work shall include the cost to excavate 1.5 feet below the top of pavement, compact crushed aggregate base course within the trench section and extra excavation areas with roller compactor, and temporary patch material when field ordered by the Engineer.

Stripping Topsoil: Stripping Topsoil shall include stripping all topsoil able to support vegetation within the improvement area, typically to the proposed slope intercept on both sides of the roadway, unless otherwise specified in the plans or directed by the Engineer. The work shall include removing and stockpiling the topsoil in the project area for use as the top six inches of backfill behind the curb, or as salvaged topsoil.

303.2 Materials

Breaker runs consists of material conforming to section 601 of the City of Green Bay Standard Specifications.

303.3 Construction Methods

All excavation as shown on the proposal and plans shall be finished to the line and grade established by the contract plans or as directed by the Engineer. The finished grade in the terrace shall be a straight line between the top of the curb and the top of the outside edge of the sidewalk. In cases where the sidewalk is not installed, the grade in the terrace shall be interpreted as being at a positive slope of one-quarter (¼) inch per foot (2%) from the top of the curb to the property line, or as designated by the Engineer.

For areas that include the installation of curb and gutter, all major excavation of existing material in the area between the back of curb and the property line shall be completed prior to installation of curb and gutter.

The Contractor shall operate their equipment in such a manner that equipment tires or tracks do not discolor, mark, or damage existing curb and gutter, sidewalks, or pavements. The Contractor shall take all necessary precautions to protect existing trees in the terrace, or as directed by the Engineer. The Contractor, at their expense, shall immediately replace any damage or dislocation in line or elevation done to existing pavement, sidewalk, curb and gutter, other pavement, structure, or trees.

The Engineer reserves the right to order additional undercutting when conditions of the native soil require such work. Payment for additional excavation shall be made on the basis of the unit price bid per cubic yard of Excavation or Excavation Below Subgrade when included in the contract. Subbase, which has been undercut by the Contractor without being ordered by the Engineer, shall be returned to correct grade with approved material as directed by the Engineer at no expense to the City.

In excavating driveways, sidewalks or other bituminous and/or concrete areas, the pavement shall be removed to a joint or saw cut as directed by the Engineer. All required saw cuts shall be for the full depth of the pavement. All saw cuts, whether shown on the plans or directed by the Engineer, shall be considered incidental to the contract unless a separate bid item is included in the contract.

All suitable material removed from excavation may be used in the construction of the roadway and terraces, as far as is practical, and at such other places as shown on the plans or directed by the Engineer. When directed by the Engineer, the Contractor shall segregate and use approved salvageable material as fill under concrete sidewalks and pavement. This work shall be performed at no additional cost to the City.

Any surplus excavated material or unsuitable construction material shall remain the property of the City of Green Bay and shall be hauled to, dumped, and placed at a point of disposal designated by the Engineer or as designated in the contract documents. The cost of disposal shall be incidental to the contract. The Engineer may elect to direct this excavated material to an alternative site at the expense of the Contractor as long as the distance between the project site and the alternative site is not greater than the longest distance between the project site and the specified site in the contract or five miles, whichever is greater. Where the length of haul to a point of disposal designated by the Engineer is farther than the distance from the project site and the specified site or five miles, whichever is greater, the Contractor shall receive compensation at a negotiated price based on labor and vehicle operations costs. If the City of Green Bay does not have use of the surplus material or unsuitable material, it shall be disposed of by the Contractor at a location of their choosing, upon approval of the Engineer, at no additional cost to the City. No surplus or unsuitable excavated material shall be deposited in waters of the state, floodplains, or wetlands.

When an abutting property owner adjacent to the project limits requests fill, it shall be supplied to them, subject to the approval of the Engineer, at no cost to the property owner. No material shall be deposited on private property unless the property owner has obtained a fill permit from the City of Green Bay. The Contractor shall verify that any property owner in the City of Green Bay wishing to receive fill has taken out a fill permit, and shall notify the Engineer of the disposal site. Fill permits can be obtained from the City of Green Bay at the Inspection Department, 100 N. Jefferson Street, Room 608, Green Bay, Wisconsin. Fill sites greater than one acre will be required to obtain a WisDNR NR-216 Permit.

During construction, the roadway, ditches and channels shall be maintained in a well-drained condition at all times by keeping the excavation areas and embankments sloped to the approximate section of the ultimate earth grade. Pumping may be allowed, if necessary, and approved by the Engineer. If it is necessary in the prosecution of the work to interrupt existing surface drainage, sewers, or under drainage, temporary drainage shall be provided until permanent drainage is completed. The construction of all temporary drainage installations shall be considered as incidental to the construction of the work. The Contractor shall take all reasonable and necessary precautions to preserve and protect all existing tile drains, sewers, and other sub-surface drains, or parts thereof, which in the judgment of the Engineer, may be continued in service without change. The Contractor shall repair at their expense any and all damage to such facilities resulting from negligence or carelessness.

Once the subgrade is finished to grade, and the subgrade stakes have been placed, the Contractor shall notify the Engineer when the test rolling will be performed to check for soft spots prior to placing the base course. The test rolling shall be performed with a heavy weight rubber tire vehicle (typically a loaded dump truck), while taking necessary precautions to protect existing structures from damage. The test roll area shall be the entire roadway area plus three feet on each side (3’ from face of curb). Any areas showing yielding and/or rutting under the test rolling shall be repaired by replacing and/or re-compacting the subgrade, as necessary, to stabilize the area. The Contractor shall notify the Engineer when the re-test rolling will be performed and then re-test roll the soil areas that have been replaced and/or re-compacted.

303.4 Measurement and Payment

The items of Excavation, Excavation Below Subgrade, and Stripping Topsoil shall be measured in cubic yards in its original position, computed by the method of average end areas, with no correction for curvature.

The item of Extra Excavation shall be measured in square yard

When average end areas are not computed or the contract specifies measurement by the truck-load, the following unit weights will be used in converting weight to volume for the following materials:

Material	Unit Weight In-Truck	Unit Weight In-Place	Max Load In-Truck*	Max Load In-Place**
Sand	1.50 tons/cy	1.75 tons/cy	14.8 cy	12.7 cy
Clay	1.50 tons/cy	1.75 tons/cy	14.8 cy	12.7 cy
Topsoil	1.50 tons/cy	1.65 tons/cy	14.8 cy	13.5 cy

* Based on an average tare for a quad-axle dump truck of 28,500-pounds with a 44,500-pound load.

** Uses the above tare & load weights with a 15% compaction factor, except topsoil which uses a 10% compaction factor.

The contract price for Excavation, Excavation Below Subgrade, Extra Excavation, Stripping Topsoil shall be payment in full for all equipment, tools, labor and incidentals necessary to complete the work of excavation and disposal of materials as specified.

The City will pay for measured quantities at the contract unit price under the following bid items:

ITEM #	DESCRIPTION	UNIT
303.01	Excavation	CY
303.02	Excavation Below Subgrade	CY
303.03	Extra Excavation	SY
303.04	Stripping Topsoil	CY

SECTION 304

EXCAVATION FOR STRUCTURES

304.1 General

Perform work in accordance with the provisions of WisDOT Standard Specifications for Highway and Structure Construction Section 206 except as hereinafter modified.

304.2 Materials

Vacant

304.3 Construction Methods

Vacant

304.4 Measurement and Payment

The City will pay for measured quantities at the contract unit price under the following bid items:

ITEM #	DESCRIPTION	UNIT
304.01	Bridge Excavation	LS
304.02	Culvert Excavation	LS
304.03	Retaining Wall Excavation	LS

Page Intentionally Left Blank

SECTION 305

FILL

305.1 General

Perform work in accordance with the provisions of WisDOT Standard Specifications for Highway and Structure Construction Section 207 and 208 except as hereinafter modified.

This section describes the furnishing and placing materials obtained under the bid items Excavation, Borrow or Engineered Fill in accordance with these specifications and as shown in the contract and plans. The work shall be done to the line and grade established by the Engineer.

Material excavated from the roadway and used as fill shall be considered incidental and included in the price of Excavation.

305.2 Materials

Fill material shall be Engineer-approved material containing no boulders, stumps, logs, masonry, debris or other unacceptable materials. No soil containing sod or appreciable amounts of organic matter or humus shall be used in the fill.

Borrow shall consist of satisfactory soil or a mixture of satisfactory soil, stone, gravel or other acceptable materials. Pit run material shall consisting of material of which 98% will pass a three- inch sieve and no more than 10% by weight will pass a No. 200 sieve. The material shall be evenly graded, free from debris and organic material. Crushed stone not meeting the above gradation requirements may be substituted provided 100% of the material will pass a three-inch sieve.

Engineered Fill shall consist of material specified shown accordance with these specifications and as shown in the contract and plans.

305.3 Construction Methods

All fill material comprised of native soils shall be deposited, spread, and leveled in layers not exceeding eight (8) inches in thickness before compaction. All Borrow material shall be deposited, spread, and leveled in layers not exceeding twelve (12) inches. Each layer shall be compacted to at least 95 percent of the maximum dry density according to a modified Proctor test (AASHTO Designation: T-180 or ASTM D-1557). The required compaction shall be attained for each layer before any material for a succeeding layer is placed thereon.

The compaction performed by means of tamping rollers, pneumatic rollers, vibratory rollers, or other types of equipment, which will produce the required results in the materials, encountered and be subject to the approval of the Engineer. Tandem or three wheel rollers, if used on the project, must weigh at least ten (10) ton. Hauling and leveling equipment shall be routed and distributed over each layer of fill in such a manner as to make use of the compaction afforded thereby.

The compaction shall not be performed when the moisture content of the materials is such as to cause excessive displacement or distortion under the compaction equipment. Where such conditions exist, the Contractor shall be required to add moisture or remove moisture by aeration to produce the moisture content necessary for the required compaction of the materials.

305.4 Measurement and Payment

Borrow and Engineered Fill shall be measured in cubic yards based on tickets received by the Engineer for each load. Payment will not be made for any amount not substantiated by a ticket received by the Engineer. Tickets delivered to the City of Green Bay project will be accepted only from trucks whose volume is clearly marked on the box. The City reserves the right to measure the truck box to check the volume so marked. Borrow and Engineered Fill will converted from weight to volume based on the unit weights as follows:

Material	**Unit Weight In-Truck**	**Unit Weight In-Place**	**Max Load In-Truck***	**Max Load In-Place****
Sand	1.50 tons/cy	1.75 tons/cy	14.8 cy	12.7 cy
Clay	1.50 tons/cy	1.75 tons/cy	14.8 cy	12.7 cy
Topsoil	1.50 tons/cy	1.65 tons/cy	14.8 cy	13.5 cy
CABC ¾” or 1 ¼”	1.70 tons/cy	2.00 tons/cy	13.1 cy	11.1 cy
Breaker Run	1.50 tons/cy	1.75 tons/cy	14.8 cy	12.7 cy
Pit Run	1.50 tons/cy	1.75 tons/cy	14.8 cy	12.7 cy

* Based on an average tare for a quad-axle dump truck of 28,500-pounds with a 44,500-pound load.

** Uses the above tare & load weights with a 15% compaction factor, except topsoil which uses a 10% compaction factor.

Where no weight is given, the Max Load In-Place values will be used.

Delivery tickets must show the date, location where used, weight of the truck (tare), total weight (truck & load), and the net weight (load only). They shall be numbered individually in a manner such that each ticket has a unique number. These delivery tickets shall be given to the Inspector daily, or if the Inspector is not available, the delivery tickets shall be given to the Engineering Division Office within two workdays after the material is delivered to the project area. Failure to provide these tickets in a timely manner may be cause to deny payment for the material.

The quantity of Borrow and Engineered Fill, measured as provided above, will be paid for at the contract unit price per cubic yard (Truck Measure) for Borrow and Engineered Fill, complete in place, which price shall be full compensation for furnishing, hauling, placing and compacting the specified material, including all equipment tools, labor and incidentals necessary to complete the work as specified.

The City will pay for measured quantities at the contract unit price under the following bid items:

ITEM #	DESCRIPTION	UNIT
305.01	Borrow	CY
305.02	Engineered Fill	CY

SECTION 306

GRANULAR BACKFILL

306.1 General

Perform work in accordance with the provisions of WisDOT Standard Specifications for Highway and Structure Construction Section 209 except as hereinafter modified.

306.2 Materials

Vacant

306.3 Construction Methods

Vacant

306.4 Measurement and Payment

The City will pay for measured quantities at the contract unit price under the following bid items:

ITEM #	DESCRIPTION	UNIT
306.01	Granular Backfill	CY

Payment for granular backfill will not be paid separately for material specifically listed as incidental to other contract bid items.

Page Intentionally Left Blank

SECTION 307

STRUCTURE BACKFILL

307.1 General

Perform work in accordance with the provisions of WisDOT Standard Specifications for Highway and Structure Construction Section 210 except as hereinafter modified.

307.2 Materials

Vacant

307.3 Construction Methods

Vacant

307.4 Payment

The City will pay for measured quantities at the contract unit price under the following bid items:

ITEM #	DESCRIPTION	UNIT
307.01	Structure Backfill	CY

Page Intentionally Left Blank

SECTION 308

PREPARING THE FOUNDATION

308.1 General

Perform work in accordance with the provisions of WisDOT Standard Specifications for Highway and Structure Construction Section 211 except as hereinafter modified.

308.2 Materials

Vacant

308.3 Construction Methods

Replace Section 211.3.3 (1) of the WisDOT Standard Specifications for Highway and Structure Construction in its entirety with the following:

For Prepare Foundation for Asphaltic Paving and Concrete Pavement, prepare the foundation by scarifying, blading, leveling, and rolling as required to bring the foundation to the required grade, cross-section, and density. Shape and compact the foundation for the full width of the roadbed, to the required lines, grade, cross-section, and density for at least 250 feet in advance of base laying operations. Unless specified otherwise, uniformly compact the foundation to not less than the density for standard compaction of the particular material existing in the foundation. Maintain the prepared foundation ahead of the base laying operations in a smooth condition and at not less than specified density. Remove any ruts or surface irregularities produced by hauling or other equipment or other traffic. Remove any unsuitable materials, including but not limited to, leaves or tree branches. Correct all soft or yielding areas, holes, or other defects that occur due to traffic, hauling, poor drainage, unstable materials, or from any other cause before placing the base. Remove snow or ice, if any, from the foundation before placing the base.

For Prepare Foundation for Pavement, preparing foundation for hot mix asphalt shall be directed by Engineer and shall include sawing and removing pavement, excavating, placing and compacting crushed aggregate base course in preparation for the placement of asphalt pavement. The placement of hot mix asphalt pavement will be done by others. Contractor shall notify Engineer when areas are ready for asphalt placement.

308.4 Measurement and Payment

The City will pay for measured quantities at the contract unit price under the following bid items:

ITEM #	DESCRIPTION	UNIT
308.01	Prepare Foundation for Asphaltic Paving	LF
308.02	Prepare Foundation for Concrete Pavement	LF
308.03	Prepare Foundation for Pavement	SY

Page Intentionally Left Blank

SECTION 309, 310, 311, 312

VACANT

Page Intentionally Left Blank

SECTION 313

EROSION CONTROL

313.1 General

Perform work in accordance with the provisions of WisDOT Standard Specifications for Highway and Structure Construction Section 606 & 628 except as hereinafter modified.

The work under this item shall conform to the WisDOT Specifications and WisDNR Construction Site Erosion Control and Technical Standards.

The Contractor shall comply with Chapter 34 of the City of Green Bay Municipal Code (Construction Site Erosion Control Ordinance), NR 216, and Wisconsin Administrative Code at all times while performing the work under this contract. The Contractor shall prepare and submit an Erosion Control Permit Application along with one (1) erosion control plans to the Engineer prior to or at the preconstruction meeting. The Contractor may use the erosion control plan provided in the Contract documents as a minimum basis. The plan may need to be modified based on the Contractor's proposed work method to meet the requirements of the permit. No work shall commence until the Erosion Control Permit has been approved by the Engineer and implemented by the Contractor.

Copies of the Ordinance are available in the office of the Department of Public Works - Engineering Division, Room 300, City Hall, 100 North Jefferson Street, Green Bay, Wisconsin.

Erosion Control inspections by the Contractor shall take place weekly (every 7 days) or within twenty-four (24) hours of a storm producing at least 0.5 inches of precipitation.

313.2 Material

Tracking Pads shall be constructed using 3" to 6" clear or washed stone; all material to be retained on a 3" sieve or use a manufactured trackout control device.

Rock Filled Erosion Control Bags shall be constructed using well-graded course aggregate conforming to the following gradation requirements:

Sieve Size	Percent Passing
2 Inch	-
1½ Inch	-
1 Inch	100
3/4 Inch	90-100
3/8 Inch	20-55
No. 4	0-10
No. 8	0-5

313.3 Construction Methods

Tracking Pads shall be placed at the access points to the construction site prior to the start of the site disturbance.

Tracking Pads shall have a minimum depth of 12” of 3” – 6” clear or washed stone placed over Geotextile Fabric Type R where there is clay soils or as directed by the Engineer. The pad shall be the full width of the egress point or a minimum width of 12’ wide, whichever is greater, and 50’ long for single lane use. For two-way traffic the pad shall be the full width of the egress point, or a minimum width of 16’ wide, whichever is greater.

Manufactured Trackout Control Devices shall be installed per the manufacturer’s specifications and Wisconsin DNR technical standard.

Surface water must be prevented from passing through the tracking pad. Flows shall be diverted away from tracking pads or conveyed under and around them.

The tracking pad shall be inspected daily and shall be maintained for effectiveness as often as needed. Maintenance may include additional stone being placed if the existing stone becomes buried or if sediment tracked on the adjacent streets by means other than flushing the street or sweeping the material into the gutter. If material is tracked on adjacent streets the Contractor is in violation of City ordinances and State Statute. The material from tracking shall be collected within two (2) hours of notification or as directed by the Engineer, based upon traffic conditions or impending weather, and shall be disposed of in an acceptable manner. The maintenance and final removal of the tracking pad is incidental to the cost of the tracking pad.

The Contractor shall minimize dust dispersion during construction by applying water or other Engineer-approved methods or materials. Dust control will be considered incidental to the project costs.

Inlet Protection shall follow the guidelines of the Wisconsin Department of Natural Resources Conservation Practice Standard 1060 “Storm Drain Inlet Protection For Construction Sites”, and can be accessed at http://dnr.wi.gov/topic/Stormwater/standards/const_standards.html. At no time shall Inlet Protection Type B be used on an inlet with a curb box. Inlet Protection Type C may be used when:

- The curb section is replaced with hot/cold mix curb, and the surrounding pavement is replaced with hot/cold mix.

- A curb box is installed and there is no existing curb and gutter, providing the surrounding ground is lower than the curb box and the surrounding ground has hot/cold mix. If the surrounding ground is not paved, Inlet Protection Type A shall be installed.

- The roadway is excavated, graded and graveled, and fine graded within two (2) days, provided the weather is clear and there is no forecast for rain, and the Contractor cleans the inlets within a day after fine grading is completed.

- If Inlet Protection Type C is ineffective or not installed/maintained, as determined by the Engineer, the Contractor shall be responsible to install Inlet Protection Type D.

Culvert Pipe Check shall be placed on the inlet end of culverts, as shown of the plans, or as directed by the Engineer.

Erosion and sediment control practices at each site where land disturbing construction activity is to occur shall be used to prevent or reduce all of the following:

- The deposition of soil from being tracked onto streets by vehicles.
- The discharge of sediment from disturbed areas into on-site storm water inlets.
- The discharge of sediment from disturbed areas into adjacent waters of the state.
- The discharge of sediment from drainage ways that flow off the site.
- The discharge of sediment by dewatering activities.
- The discharge of sediment eroding from soil stockpiles existing for more than 7 days.
- The transport by runoff into waters of the state of chemicals, cement, and other building compounds and materials on the construction site during the construction period.

The BMPs used to comply with this section shall be implemented as follows:

- Erosion and sediment control practices shall be constructed or installed before land disturbing construction activities begin.
- Erosion and sediment control practices shall be maintained until final stabilization.
- Final stabilization activity shall commence when land disturbing activities cease and final grade has been reached on any portion of the site.
- Temporary stabilization activity shall commence when land disturbing activities have temporarily ceased and will not resume for a period exceeding 14 calendar days.
- BMPs that are no longer necessary for erosion and sediment control shall be removed by the responsible party.

All Best Management Practices (BMP's) installed shall be maintained which may include cleaning, repairing and replacing as needed and directed by the Engineer. Maintenance of BMP's shall be considered incidental to the respective bid item maintained.

All temporary erosion control devices shall be removed, as the Engineer determines, after stabilizing the site to the extent that future erosion is unlikely. The area where the erosion control devices were located shall be cleaned and restored after removal. The Contractor owns all materials remaining after removal and is responsible for their disposal off the right-of-way. This work will be considered incidental to the respective bid item removed.

313.4 Measurement and Payment

The City will pay for measured quantities at the contract unit price under the following bid items:

ITEM #	DESCRIPTION	UNIT
313.01	Erosion Bales	EACH
313.02	Silt Fence	LF
313.03	Inlet Protection Maintenance	EACH
313.04	Erosion Mat Class I, Type A	SY
313.05	Erosion Mat Class I, Type B	SY
313.06	Erosion Mat Urban Class I, Type A	SY
313.07	Erosion Mat Urban Class I, Type B	SY
313.08	Erosion Mat Class II, Type A	SY
313.09	Erosion Mat Class II, Type B	SY
313.10	Erosion Mat Class II, Type C	SY
313.11	Erosion Mat Class III, Type A	SY
313.12	Erosion Mat Class III, Type B	SY
313.13	Erosion Mat Class III, Type C	SY
313.14	Erosion Mat Class III, Type D	SY
313.15	Polyethylene Sheeting	SY
313.16	Turbidity Barrier	SY
313.17	Soil Stabilizer	ACRE
313.18	Inlet Protection, Type A	EACH
313.19	Inlet Protection, Type B	EACH
313.20	Inlet Protection, Type C	EACH
313.21	Inlet Protection, Type D	EACH
313.22	Light Riprap	CY
313.23	Medium Riprap	CY
313.24	Heavy Riprap	CY
313.25	Extra-Heavy Riprap	CY
313.26	Grouted Riprap Light	CY
313.27	Grouted Riprap Medium	CY
313.28	Grouted Riprap Heavy	CY
313.29	Tracking Pad	EACH
313.30	Rock Filled Erosion Control Bags	EACH
313.31	Temporary Ditch Check	EACH
313.32	Culvert Pipe Check	EACH

The City will not pay separately for any erosion control mobilizations. Maintenance of all erosion control items is a required condition of the City of Green Bay Municipal Code and Erosion Control Permit. As such the City of Green Bay will not pay separately for maintenance of any erosion control devices.

SECTION 314

CONSTRUCTION STAKING

314.1 General

Perform work in accordance with the provisions of WisDOT Standard Specifications for Highway and Structure Construction Section 650 except as hereinafter modified.

314.2 Description

This work shall consist of the construction survey work including the furnishing and setting of construction stakes necessary to establish the location, grade, and alignment of the required staking items, in accordance with the plans or as directed by the Engineer. This work shall be completed under the direction of a State of Wisconsin Registered Land Surveyor.

314.3 Construction Methods

Benchmark data, grades, and alignment shall be obtained or calculated from data in the plan and shall be verified with the Engineer prior to beginning the work. When necessary, this work shall include re-establishing the horizontal roadway alignment from alignment pull ties or control points furnished by the Engineer. It is unacceptable to establish the horizontal alignment from slope stakes.

Methods of survey and staking shall be approved by the Engineer prior to beginning the work. The degree of accuracy used in the survey work shall be consistent with Third Order Class II.

If, in the opinion of the Contractor, the approved design plans are found to lack sufficient information for proper layout or a potential error is found, the Contractor shall immediately notify the Engineer responsible for the project.

A. General Requirements:

The Staking Contractor shall:

1. Obtain, from the Prime Contractor, the approved plans, special provisions and specifications for the project. Note: Plan revisions may occur at any time throughout the life of the project; therefore, check with the Prime Contractor prior to staking for changes to the approved plan supplied by the Engineer. The Staking Contractor may also check with the Engineer to ensure that alignment, profiles, and grades have not changed from what is shown on the approved plan. Compute grades/alignment from approved plans, including any revisions that have been made.

2. Field locate controlling plan survey data for the project. Do not stake out anything without first field verifying for accuracy. Verify grade of existing streets where new construction begins or ends.

3. When necessary, establish horizontal control that is in compliance with Third Order Class I accuracy in relation to the existing project control. Establish any required vertical control in compliance with Third Order accuracy in relation to the existing project control.

4. Record all information in field books including a description of control and all related notes for this control. All survey notes and computations used in establishing the lines and grades shall be given to the Engineer within 10 days of completing the work. Keep neat and accurate field notes of work being performed.

5. Immediately bring to the attention of the Engineer any discrepancies or errors.

6. Provide a complete cut-sheet indicating staking information for each item of work to the City within 24 hours of staking. All structure elevations shall be on a separate sheet.

7. Lath shall be painted and flagged after marking.

B. Initial Layout:

Replace section 650.3.13(1) of the WisDOT Standard Specification for Highway and Structure Construction in its entirety and replace with the following:

Verify the existing ground elevations as shown for all roadways on cross-section sheets for accuracy. Take and document a minimum of 5 shots per roadway section, one at each slope stake location, one at centerline, and a minimum of one additional shot between the slope stake and centerline to account for any topographical changes between them (see diagram). Additional shots can be taken as needed to obtain a true representation of the pre-construction topography. No additional payment will be made for additional cross-section shots taken, they will be considered incidental to the item Initial Layout. Set and maintain slope stakes on each side of the road at maximum intervals of 50 feet. The slope stakes shall be set along both sides of the roadway, 5’ off the slope intercepts. Mark grade stakes indicating the station, offset and cut or fill to top of subgrade.

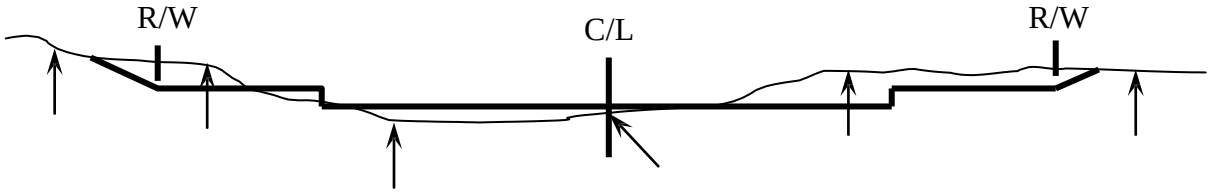

→ = Ground Shot taken as part of Initial Layout

Documentation to give the Engineer includes:

1. The station, offset, and elevations of the existing ground shots.

2. Slope stake information for each stake set.

C. Sanitary Sewer, Storm Sewer, & Water:

Replace section 650.3.2 of the WisDOT Standard Specification for Highway and Structure Construction in its entirety and replace with the following:

Set and maintain construction stakes or marks as necessary to achieve the required accuracy and to support the method of operations. Locate all pipe, inlet, catch basin, manhole, and endwall construction stakes to within 0.02 feet of the true horizontal position, and establish the elevations to within 0.01 feet of the true vertical position. Determine that the final elevations of storm sewer pipe outfalls and inlets match the existing field elevations, and provide this information to the Engineer at a mutually agreed upon date or least 14 calendar days before ordering inlets, catch basins, manholes, endwalls, and storm sewer pipe.

At locations where pipe culverts are to be installed at existing drainage ditches. The Contractor shall determine existing ditch elevations for a minimum of 100 feet from pipe ends or as directed by the Engineer. The Contractor shall provide the information to the Engineer 7 calendar days prior to the Contractor ordering pipe culverts.

1. Structures

   Stake the following structures on line with lath. Mark lath to indicate the centerline of the item staked (i.e. centerline inlet).

   a. Manholes
   b. Inlets
   c. Outfalls

   Place two (2) offset grade stakes and lath on all of the above. Mark grade stakes with cuts or fills to all flowlines and rims. Also, mark grade stakes with station and offset.

2. Mainline Sewers

   Place offset grade stakes and lath for mainline sewers and ditches, out of every structure, every 50 feet until reaching the next structure. Place a lath at any tees, wyes, fittings or appurtenant construction. Mark grade stakes with station, (station 0+00 begins at all downstream manholes) offset and cut or fill to flowline measured from center of the downstream manhole.

3. Water Main Centerline

Place stakes and lath for water main centerline every 100 feet along straight line runs, every 50 feet along curves with a radius of over 500 feet, and every 25 feet along curves with a radius of 500 feet or less. Mark water main centerline stakes with station. The Contractor is only required to stake the water main centerline horizontal alignment. The Green Bay Water Utility will establish all fitting locations and vertical grade alignment.

D. Subgrade and Base:

If there are no Construction Staking Subgrade or Construction Staking Base bid items included in the contract, then the Contractor may perform the subgrade and crushed aggregate base course staking themselves without having a licensed RLS oversee the work. Every 50 feet, three (3) laths shall be placed in the ground with marks for subgrade, breaker run, if appropriate, and base course at the centerline and at 2.5 feet back of curb. This work shall be considered incidental to the Contract.

If the Construction Staking Subgrade or Construction Staking Base bid items are included in the contract, then the Contractor shall follow the specifications as hereinafter described:

1. Subgrade

Section 650.3.3 of WisDOT Specifications shall be modified as follows:

At a minimum, stake centerline and subgrade shoulder (2.5 feet behind back of curb) per cross section. Stake cross sections at maximum intervals of 50 feet. When staking subgrade through horizontal or vertical curves reduce maximum spacing to 25 feet and all stations as shown on plan. Additional stakes shall be set and maintained as necessary to establish location and grade along intersecting road radii and for auxiliary lanes, vertical curves, horizontal curves and curve transitions in accordance with the plan. Locate stakes to within 0.25 feet of the true horizontal position, and establish the grade elevation to within 0.03 feet of the true vertical position.

2. Base

Section 650.3.4 of WisDOT Specifications shall be modified as follows:

At a minimum, stake centerline and subgrade shoulder (2.5 feet behind back of curb) per cross section. Stake cross sections at maximum intervals of 50 feet. When staking base through horizontal or vertical curves reduce maximum spacing to 25 feet and all stations as shown on plan. Additional stakes shall be set and maintained as necessary to establish location and grade along intersecting road radii and for auxiliary lanes, vertical curves, horizontal curves and curve transitions in accordance with the plan. Locate stakes to within 0.25 feet of the true horizontal position, and establish the grade elevation to within 0.03 feet of the true vertical position.

E. Curb & Gutter:

Section 650.3.5 of WisDOT Specifications shall be modified as follows:

Set construction stakes at 50-foot intervals, maximum. When staking curb and gutter through horizontal or vertical curves reduce maximum spacing to 25 feet and all stations as shown on plan. Additional stakes shall be set and maintained as necessary to establish location and grade along intersecting road radii and for auxiliary lanes, vertical curves, horizontal curves and curve transitions in accordance with the plan. Locate stakes to within 0.02 feet of the true horizontal position, and establish the grade elevation to within 0.01 feet of the true vertical position. Place a grade stake and lath at an offset from the back of curb to be determined by the Contractor. Mark grade stakes indicating the station, offset and cut or fill to the top of curb. In addition, provide a grade stake and lath to locate PC's and PT's on all horizontal curves. Also, provide a grade stake and lath to locate the center of radii and the midpoint on the curve of radii.

F. Curb Ramps:

Set one hub and lath 3' (or more if needed) off the back sidewalk corner point □ denoting the location and grade of the corner point. If the elevation of this point is not shown in the plans, the Contractor shall compute the elevations of the following:

① Elevation of the curb at the middle of the curb ramp. Compute this grade either from the plan or by using the existing/proposed end of radii grades.
② From point ① use a 7% ramp grade (or less) to calculate the elevation of point ②.
③ From point ② use a 2% grade to calculate the elevation of point ③.
④ From point ③ use a 7% grade to determine the limits of sidewalk removal (go to the nearest full panel).

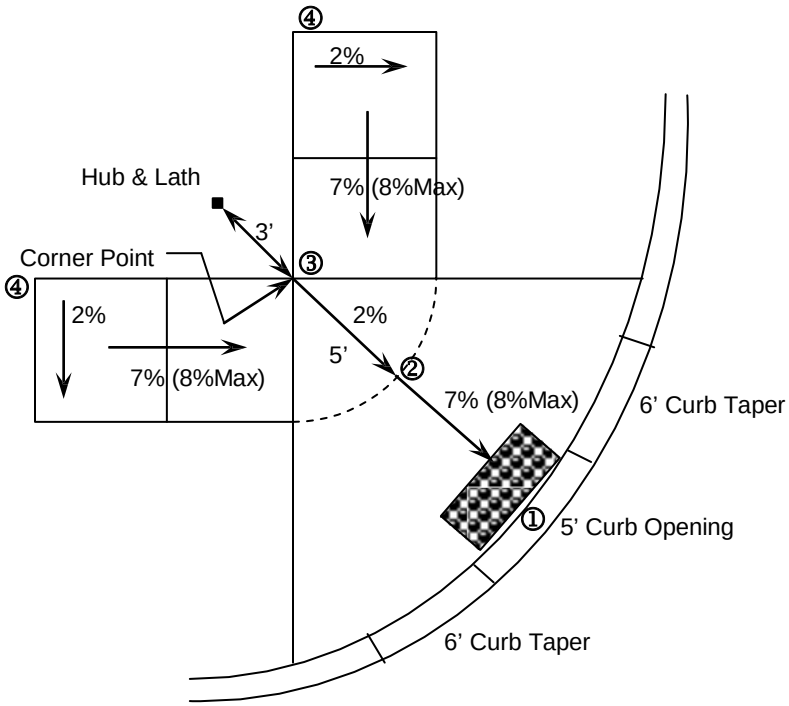

Additional stakes shall be set and maintained as necessary to establish location and grade needed to correctly form the curb ramp. Locate stakes to within 0.02 feet of the true horizontal position, and establish the grade elevation to within 0.01 feet of the true vertical position. The Contractor shall mark the sidewalk removal limits (as noted in step 4 above). All calculations involved in setting the stakes is incidental to the bid item Construction Staking, Curb Ramp. The Contractor shall submit the cut sheet for this item with a sketch for each curb ramp staked.

G. Flumes:

The Contractor shall stake the flume with lath at the curb line. The Contractor shall mark the lath to indicate the centerline of the flume. An additional lath shall be placed at the flume end. All grade stakes shall be marked with cuts or fills to all flow lines, stationing, and offsets.

H. Electrical Pull Boxes/Base:

The contractor will stake the center of the pull box and the four corners of the base. The contractor shall mark the lath to indicate the center of the pull box or the corners of the base. Locate stakes to within 0.02 feet horizontally and to establish the grade elevation to within 0.01 feet vertically.

314.4 Measurement and Payment

The City will pay for measured quantities at the contract unit price under the following bid item:

ITEM #	DESCRIPTION	UNIT
314.01	Construction Staking Sanitary Sewer Mainline	LF
314.02	Construction Staking Storm Sewer Mainline	LF
314.03	Construction Staking Sanitary Sewer Manhole	EACH
314.04	Construction Staking Storm Sewer Manhole	EACH
314.05	Construction Staking Storm Sewer Inlet	EACH
314.06	Construction Staking Initial Layout	LF
314.07	Construction Staking Subgrade	LF
314.08	Construction Staking Base	LF
314.09	Construction Staking Curb & Gutter	LF
314.10	Construction Staking Concrete Pavement	LF
314.11	Construction Staking Pipe Culverts	EACH
314.12	Construction Staking Flume	EACH
314.13	Construction Staking Electrical Pull Box/Base	EACH
314.14	Construction Staking Water Mainline	LF
314.15	Construction Staking Curb Ramp	EACH
314.16	Construction Staking Project	LS

SECTION 315

TRAFFIC CONTROL

315.1 General

This work shall consist of furnishing, erecting, maintaining, moving and removing traffic signs, drums, barricades, and warning lights and shall include flagging and guidance of traffic as needed. This work shall be done in accordance with the latest version of Part 6, Temporary Traffic Control, of the Manual of Uniform Traffic Control Devices (MUTCD) and the Wisconsin Manual on Uniform Traffic Control Devices (MUTCD) except as noted hereafter, the plans, Specifications and Contract, and as directed by the Engineer.

315.2 Materials

Devices shall be in accordance with the latest version of Part 6, Temporary Traffic Control, of the Manual of Uniform Traffic Control Devices (MUTCD) and the Wisconsin Manual on Uniform Traffic Control Devices (MUTCD)

315.3 Construction Methods

Contractor shall be responsible for preparation of a Traffic Control Plan. The Traffic Control Plan shall be submitted to the Engineer for review and approval no later than at the Preconstruction Conference.

Traffic control will be the responsibility of the Contractor at all times during the Contract. This may include providing additional traffic control devices for the coordination of work with other Contractors that may be working at or adjacent to the project.

The Contractor or an approved traffic control subcontractor shall complete all traffic control signing and barricading.

Unless otherwise noted in the Contract Documents, two-way traffic must be maintained with each lane a minimum of eleven (11) feet in width.

Residential streets may be closed to through traffic during construction. However, one (1) paved lane of traffic, a minimum of eleven (11) feet in width in each direction, shall be maintained at all times for residential traffic and emergency vehicles. When traffic is reduced to only one lane of traffic, flaggers whose sole duty is that of a flagger, shall be provided by the Contractor.

If, on a residential street, one (1) eleven (11) foot travel lane cannot be maintained in either direction, with the concurrence of the Engineer, the Contractor may close a section of the roadway, but shall maintain access to all intersecting streets and all driveways. This request shall be provided to the Engineer three (3) working days prior to the needed closure. The roadway shall be opened to traffic at the end of each day.

The City reserves the right to contact the traffic control subcontractor directly to note deficiencies and omissions of traffic control devices that are contrary to plan and MUTCD standards.

The Contractor shall address all deficiencies in traffic control within six (6) working hours of first notice.

The Contractor shall check all traffic control devices and make appropriate adjustments at the following times at a minimum:

- At the beginning of each workday.
- At the completion of any work activity requiring temporary relocation of traffic control devices.
- At Mid-day
- At the end of each workday.
- At any time during the workday when deficiencies in traffic control are noted.

All traffic control devices shall have retro-reflective sheeting on all sides, regardless of their use on the job site.

All traffic control devices shall be kept reasonably clean and maintained in acceptable condition.

All Type 3 barricades and other barricades used to mark isolated obstructions and closures shall be equipped with an operable Type A double-sided amber-flashing beacon.

If operable beacons are used in conjunction with channelizing traffic control devices, they shall be Type C single-sided or double-sided amber steady-burn beacons.

Portable sign stands shall not be used for more than seven (7) continuous days and nights except for certain signs as permitted in the MUTCD. Portable signs used in compliance with the Specification shall be properly ballasted to minimize wind-related problems, and shall be crash worthy. Proper sign mounting height requirements shall apply; 7 feet in urban areas and 5 feet in rural areas from the pavement to the bottom of the sign.

A. Site Access

Access to project site shall be as designated in the Contract Documents or as directed by the Engineer. Construction traffic shall use roads designated as official City truck routes to access project site. Where access to project site is not available via truck routes, Contractor shall use the most direct route along local residential street as approved by the Engineer.

The City reserves the right to impose gross vehicle weight and axle load limits where in its judgment the integrity of existing streets may be threatened.

B. General Obstruction

The Contractor shall barricade and protect the construction area and shall conduct operations in a manner that will not obstruct traffic in any areas adjacent to the limits of the project. The construction site shall be tightly barricaded at the end of each workday. No equipment or materials shall be stopped, loaded, unloaded or stored in a location, which will hinder, distract or impede a safe and suitable traffic operation on roadways to be maintained open to traffic under the Contract, unless otherwise approved by the Engineer.

All temporary traffic control devices shall be removed as soon as practical when they are no longer needed. When work is suspended for short periods of time, temporary traffic control devices that are no longer appropriate shall be removed or covered. When contractor work is completed for the day at a particular location, and that there is no need to obstruct the same area over the next day, related channelizing devices and attached signs must be removed from the obstructed areas while the advance warning signs are either removed, covered, or turned away from live traffic.

Work shall be scheduled to minimize inconvenience to businesses and residences located on or adjacent to the project. Businesses and residences shall be kept open to pedestrian access at all times.

Ingress and egress to all commercial properties shall be maintained at all times.

C. Barricading

The Contractor shall provide and maintain barricades, safety fence, signs, drums, etc. as needed to protect the work site, material storage areas, and obstructions. All barricades, fencing and protection provided shall be of sufficient height and strength to prevent accidents to workers or to the public. Where necessary, the Contractor shall furnish and maintain warning lights during the hours of darkness. The Contractor shall be held responsible for any damages caused by neglecting to take such precautions. This work shall be incidental to the Contract.

D. Lane Delineation

On mainline work involving two-way traffic with the road closed to through traffic, the Contactor shall separate the work zone from the traffic zone using traffic control devices.

On mainline work involving two-way traffic open to traffic, the Contractor shall use two (2) different types of channelizing devices. One type of channelizing device shall be used to separate the two opposing directions of traffic. The second type of channelizing device shall be used to separate the work zone from the traffic zone. These devices cannot be mixed with each other.

E. Project Identity Sign

The Contractor shall install and maintain a project identity sign at each end of the project site prior to and during construction. The sign(s) shall be placed in a location approved by the Engineer and shall be constructed in conformance with Standard Drawing. This requirement may be waived when, in the opinion of the Engineer, the placement of project identity signs is not warranted. The project identity signs shall be considered incidental to the project and no separate payment will be made for its provisions, maintenance, and removal.

F. Work Restrictions

Do not perform work on, nor haul materials of any kind along or across any portion of the roadway carrying Mason Street, Military Avenue, Lombardi Avenue, Main Street, University Avenue, Ashland Avenue, Velp Avenue, Shawano Avenue, West and East Walnut Street, and Monroe Avenue traffic, and entirely clear the traveled way and shoulders of such portions of the roadway of equipment, barricades, signs, lights, and any other material that might impede the free flow of traffic during the following holiday periods:

- From noon the Friday before until 6:00 AM the Tuesday after for Memorial Day;
- From noon July 3 until 6:00 AM July 5 for Independence Day; if the holiday falls on the weekend it would be from noon the Friday before through 6:00 AM the following Monday.
- From noon the Friday before until 6:00 AM the Tuesday after for Labor Day.

Do not perform work on, nor haul materials of any kind, along or across any portion of the roadways in the area of the Packer Stadium. Entirely clear the traveled way and shoulders of such portions of the roadway of equipment, barricades, signs, lights, and any other material that might impede the free flow of traffic during the following special event periods:

- Green Bay Packers Family Night Scrimmage: From three (3) hours before the scrimmage until three (3) hours after the scrimmage;
- Green Bay Packers home games: From three (3) hours before the game until three (3) hours after the end of the game.
- Lambeau Field Events: From eight (8) hours before the event until three (3) hours after the event.

315.4 Measurement and Payment:

The item Traffic Control (Project) will be paid for at the contract lump sum price, which price shall be full compensation for furnishing, erecting, maintaining, moving and removing traffic control devices for vehicular and pedestrian traffic. Any additional traffic control required for the project, other than what is shown in the plans, shall be incidental to the lump sum Traffic Control price. No adjustment to the unit cost for Traffic Control will be made.

The item Traffic Control (Street) will be paid for at the contract unit price as each individual unit per street listed, which price shall be full compensation for furnishing, erecting, maintaining, moving and removing traffic control devices for vehicular and pedestrian traffic.

When the Contract does not include a separate contract item for Traffic Control, then all the

work herein before prescribed, required and performed will be considered incidental to other items in the Contract.

The City will pay for measured quantities at the contract unit price under the following bid items:

ITEM #	DESCRIPTION	UNIT
315.01	Traffic Control (Project)	LS
315.02 - 15	Traffic Control (Street)	EACH

Page Intentionally Left Blank

SECTION 316

PAVEMENT MARKING

316.1 General

Perform work in accordance with the provisions of WisDOT Standard Specifications for Highway and Structure Construction Section 646 except as hereinafter modified.

316.2 Materials

Vacant

316.3 Construction Methods

Vacant

316.4 Payment

The City will pay for measured quantities at the contract unit price under the following bid items:

ITEM #	DESCRIPTION	UNIT
316.01	Pavement Marking Epoxy 4-Inch	LF
316.02	Pavement Marking Epoxy 6-Inch	LF
316.03	Pavement Marking Channelizing Epoxy 8-Inch	LF
316.04	Removing Pavement Markings	LF
316.05	Pavement Marking Railroad Crossings Epoxy	LF
316.06	Pavement Marking Arrows Epoxy Type 1	EACH
316.07	Pavement Marking Arrows Epoxy Type 2	EACH
316.08	Pavement Marking Arrows Epoxy Type 3	EACH
316.09	Pavement Marking Arrows Epoxy Type 4	EACH
316.10	Pavement Marking Arrows Epoxy Type 5	EACH
316.11	Pavement Marking Arrows Bike Lane Epoxy	EACH
316.12	Pavement Marking Symbols Epoxy	EACH
316.13	Pavement Marking Symbols Bike Lane Epoxy	EACH
316.14	Pavement Marking Words Epoxy	EACH
316.15	Pavement Marking Words Bike Lane Epoxy	EACH

316.16	Pavement Marking Curb Epoxy	LF
316.17	Pavement Marking Curb Ramp Epoxy	LF
316.18	Pavement Marking Stop Line Epoxy 12-Inch	LF
316.19	Pavement Marking Stop Line Epoxy 18-Inch	LF
316.20	Pavement Marking Stop Line Epoxy 24-Inch	LF
316.21	Pavement Marking Island Nose Epoxy	EACH
316.22	Pavement Marking Parking Stall Epoxy	LF
316.23	Pavement Marking Diagonal Epoxy 6-Inch	LF
316.24	Pavement Marking Diagonal Epoxy 8-Inch	LF
316.25	Pavement Marking Diagonal Epoxy 12-Inch	LF
316.26	Pavement Marking Diagonal Epoxy 18-Inch	LF
316.27	Pavement Marking Diagonal Epoxy 24-Inch	LF
316.28	Pavement Marking Crosswalk Epoxy 6-Inch	LF
316.29	Pavement Marking Crosswalk Epoxy 12-Inch	LF
316.30	Pavement Marking Crosswalk Epoxy 18-Inch	LF
316.31	Pavement Marking Concrete Corrugated Median Epoxy	SF
316.32	Removing Pavement Markings Arrows	EACH
316.33	Removing Pavement Markings Symbols	EACH
316.34	Removing Pavement Markings Words	EACH
316.35	Temporary Pavement Marking Paint	LF
316.36	Temporary Pavement Marking Removable Tape 4-Inch	LF

SECTION 317

MOBILIZATION

317.1.1 General

This section describes the work and operations necessary to move personnel, equipment, supplies, and incidentals to the project site and to establish all of the contractor's offices, buildings, sanitary accommodations, and other facilities necessary to work on the project. It also includes all other work and operations whose performance is required, or for costs necessarily incurred before beginning work on various items on the project site.

317.2 Materials

Vacant

317.3 Construction Methods

Vacant

317.4 Measurement & Payment

Mobilization will be measured for payment as a single complete unit of work, acceptably performed. This item of work, measured as provided above, shall be paid for one time during the life of the Contract at the Contract lump sum price for Mobilization, which shall be full compensation for supplying and furnishing all materials, facilities, and services, and for performing all work necessary for the completion of this item, including all necessary repetitions caused by any and all suspensions of the work during the life of the Contract. The Contract lump sum shall be payable to the Contractor in accordance with the following schedule:

A. When twenty-five (25) percent or more of the original Contract amount is earned, fifty (50) percent of the amount bid for Mobilization will be paid.

B. When seventy-five (75) percent or more of the original Contract amount is earned, one hundred (100) percent of the amount bid for Mobilization will be paid.

Payment for Mobilization is full compensation for supplying and providing all materials, facilities, and services, and for performing all work necessary to complete this contract bid item.

The City will pay for measured quantities at the contract unit price under the following bid items:

ITEM #	DESCRIPTION	UNIT
317.01	Mobilization	LS
317.02	Mobilization	EACH

If the contract does not include a separate Mobilization bid item, the work necessary for mobilization is incidental to work included under other contract bid items.

Page Intentionally Left Blank

DIVISION 4

SEWER CONSTRUCTION

SECTION 401

SEWER REMOVALS & ABANDONMENT

401.1 General

Perform work in accordance with the provisions of WisDOT Standard Specifications for Highway and Structure Construction Section 203 and 204 except as hereinafter modified.

The Contractor will be responsible for the removal or bulkhead and abandonment of all existing pipe, inlets, catch basins, and manholes, and the bulkheading and grouting or removal of abandoned inlet leads, as designated on the plans.

401.2 Materials

All abandoned sanitary or storm sewer shall be bulkheaded on both ends of the pipe and thoroughly and completely filled with a slurry-like mixture composed of one part cement, one part fly ash, and eight parts fine, clean sand. The composition of the sand shall be such that 100 percent will pass the No. 10 screen and not more than five percent shall pass the No. 200 screen

401.3 Construction Methods

Remove pipe culverts designated for salvage in a way that prevents damage to the culverts.

Under the Removing Manholes, Removing Catch Basins, and Removing Inlets bid items, rebuild, and properly reconnect all live sewers connected with them. Maintain satisfactory bypass service during these operations. Plug unused sewers as specified for abandoning pipes and structures under 204.3.

Under the Removing Storm Sewer bid items, remove existing storm sewer. Backfill all resulting trenches with granular backfill conforming to 209.2.

If the contract calls for abandoning manholes, catch basins, or inlets, clean them thoroughly. Plug the existing pipe connections with brick or concrete block masonry, or with any grade of concrete specified under 501.3.1.3, or any engineer-approved commercial grade of concrete. Unless the plans show otherwise, remove the walls of the structures as follows:

1. Within the roadbed, to a depth at least 2 feet below the subgrade.
2. Outside the roadbed, to a depth at least 2 feet below the finished grade.
3. At any location, to the extent required to avoid interfering with the work.

All abandoned sanitary sewer, storm sewer and all abandoned utility conduits shall be bulk headed and be thoroughly and completely filled with a slurry like mixture.

When mini-storm sewers are to be abandoned, the cleanouts shall be removed to a minimum of 2 feet below the existing grade or proposed grade and capped prior to the abandonment.

When catch basins, inlets, or manholes are to be abandoned, the casting shall be removed along with the top of the structure. The walls of the structure shall then be removed to a minimum depth of two (2) feet below the proposed or existing top of curb grade or finished pavement. The bottom of the structure shall be broken up to prevent water entrapment. The remaining structure shall be backfilled with compacted ¾" crushed gravel. The ¾-inch crushed gravel backfill material shall be placed in layers not more than twelve (12) inches in depth and mechanically compacted to ninety-five (95) percent of Modified Proctor in the top three feet of the excavation and ninety (90) percent of Modified Proctor for depths greater than three feet from the finished elevation.

Structures designated to be removed shall be removed to the full depth of the structure, including its foundation. Voids resulting from abandoned or removed structures shall be backfilled with ¾-inch crushed stone backfill material placed in layers not more than twelve (12) inches in depth and mechanically compacted to ninety-five (95) percent of Modified Proctor in the top three feet of the excavation and ninety (90) percent of Modified Proctor for depths greater than three feet from the finished elevation.

All castings on such abandon structures are the property of the City and shall be salvaged by the Contractor and delivered as directed. Salvaged castings shall be brought to the East Side Garage (1820 Mills Street) within one (1) week of removal. Delivery of castings shall be coordinated with the Sewers and Bridge Superintendent, at (920) 391-3635 to set up an appointment for drop off. If the salvaged casting is not returned within thirty (30) days of obtaining the new casting, the City will charge the Contractor for the cost of a new replacement casting.

Replacement of existing manhole or inlet casting shall be as directed by the Engineer. Any damaged/broken castings observed while performing work outlined in the other bid items shall be brought to the attention of the Engineer.

The City will provide a new casting, which the Contractor can pick up at the East Side Municipal Garage at 1820 Mills Street. A Casting Exchange Request Form is required at the time the Contractor picks up a new casting. A copy of this form will be provided by the Engineer. A new casting will not be provided to the Contractor without this completed form.

401.4 Measurement and Payment

Under the Removing Culverts bid item, remove non-rectangular culverts with a cross sectional area equivalent to or larger than the area of a 12-inch diameter round pipe but smaller than a 60-inch diameter round pipe.

The City will pay for each individual pipe in a multi-pipe cluster at the contract price each. All associated precast components are incidental to this bid item. The City will pay for all associated cast-in-place components separately under the appropriate removal item in 204.

The City will measure Removing Manholes, Removing Catch Basins, and Removing Inlets as each individual manhole, catch basin, or inlet acceptably completed, including all attached parts and connections.

The City will measure the Removing Storm Sewer, Removing Sanitary Sewer, Abandon Sanitary Sewer, Abandon Storm Sewer, Abandon mini storm sewer and Abandon Culverts bid items by the linear foot acceptably completed, measured along the centerline of the pipe. Removal and capping of the cleanouts shall be incidental to the Abandon Mini-Storm Sewer bid items.

The City will measure Abandoning Manholes, Abandoning Catch Basins, Abandoning Inlets, and Abandoning Wells as each individual manhole, catch basin, inlet, and well acceptably completed.

The City will measure Abandoning Culvert Pipes, Closing Culvert Pipes, and Sealing Pipes as each individual pipe acceptably completed, having both ends plugged.

The Contractor may, with the approval of the Engineer, remove sewer in lieu of bulkhead and abandoning, at the same unit price as Bulkhead and Abandon Sewer – (size). The Contractor may, with the approval of the Engineer, bulkhead and abandon sewer in lieu of removal, at the same unit price as Bulkhead and Abandon Sewer – (size).

Removal of sewer will not be permitted in lieu of bulkhead and abandon when the removal will result in additional pavement repair.

The City will pay for measured quantities at the contract unit price under the following bid item:

ITEM #	DESCRIPTION	UNIT
401.01	Removing Manholes	EACH
401.02	Removing Catch Basins	EACH
401.03	Removing Inlets	EACH
401.04	Removing Septic Tanks	EACH
401.05	Remove Sanitary Sewer - 8"	LF
401.06	Remove Sanitary Sewer - 10"	LF
401.07	Remove Sanitary Sewer - 12"	LF
401.08	Remove Sanitary Sewer - 15"	LF
401.09	Remove Sanitary Sewer - 18"	LF
401.10	Remove Sanitary Sewer - 21"	LF
401.11	Remove Sanitary Sewer - 24"	LF
401.12	Remove Sanitary Sewer - 27"	LF
401.13	Remove Sanitary Sewer - 30"	LF
401.14	Remove Sanitary Sewer - 36"	LF
401.15	Remove Sanitary Sewer - 42"	LF
401.16	Remove Sanitary Sewer - 48"	LF
401.17	Remove Sanitary Sewer - (Size)	LF
401.18	Remove Storm Sewer - 10"	LF
401.19	Remove Storm Sewer - 12"	LF

401.20	Remove Storm Sewer - 15"	LF
401.21	Remove Storm Sewer - 18"	LF
401.22	Remove Storm Sewer - 21"	LF
401.23	Remove Storm Sewer - 24"	LF
401.24	Remove Storm Sewer - 27"	LF
401.25	Remove Storm Sewer - 30"	LF
401.26	Remove Storm Sewer - 36"	LF
401.27	Remove Storm Sewer - 42"	LF
401.28	Remove Storm Sewer - 48"	LF
401.29	Remove Storm Sewer - (Size)	LF
401.30	Remove Culvert - 10"	LF
401.31	Remove Culvert - 12"	LF
401.32	Remove Culvert - 15"	LF
401.33	Remove Culvert - 18"	LF
401.34	Remove Culvert - 21"	LF
401.35	Remove Culvert - 24"	LF
401.36	Remove Culvert - 27"	LF
401.37	Remove Culvert - 30"	LF
401.38	Remove Culvert - 36"	LF
401.39	Remove Culvert - 42"	LF
401.40	Remove Culvert - 48"	LF
401.41	Remove Culvert - (Size)	LF
401.42	Remove Inlet Lead - 10"	LF
401.43	Remove Inlet Lead - 12"	LF
401.44	Remove Inlet Lead - 15"	LF
401.45	Remove Inlet Lead - (Size)	LF
401.46	Remove Sanitary Manhole	EACH
401.47	Remove Storm Manhole	EACH
401.48	Remove Storm Catch Basin	EACH
401.49	Remove Standard Inlet	EACH
401.50	Remove Special Inlet	EACH
401.51	Remove Yard Drain / Inlet	EACH
401.52	Remove Pot	EACH
401.53	Abandon Sanitary Manhole	EACH
401.54	Abandon Storm Manhole	EACH
401.55	Abandon Standard Inlet	EACH
401.56	Abandon Special Inlet	EACH
401.57	Abandoning Catch Basins	EACH
401.58	Abandoning Culvert Pipes	EACH
401.59	Abandon Sanitary Sewer - 8"	LF
401.60	Abandon Sanitary Sewer - 10"	LF
401.61	Abandon Sanitary Sewer - 12"	LF
401.62	Abandon Sanitary Sewer - 15"	LF
401.63	Abandon Sanitary Sewer - 18"	LF
401.64	Abandon Sanitary Sewer - 21"	LF
401.65	Abandon Sanitary Sewer - 24"	LF

401.66	Abandon Sanitary Sewer - 27"	LF
401.67	Abandon Sanitary Sewer - 30"	LF
401.68	Abandon Sanitary Sewer - 36"	LF
401.69	Abandon Sanitary Sewer - 42"	LF
401.70	Abandon Sanitary Sewer - 48"	LF
401.71	Abandon Sanitary Sewer - (Size)	LF
401.72	Abandon Storm Sewer - 10"	LF
401.73	Abandon Storm Sewer - 12"	LF
401.74	Abandon Storm Sewer - 15"	LF
401.75	Abandon Storm Sewer - 18"	LF
401.76	Abandon Storm Sewer - 21"	LF
401.77	Abandon Storm Sewer - 24"	LF
401.78	Abandon Storm Sewer - 27"	LF
401.79	Abandon Storm Sewer - 30"	LF
401.80	Abandon Storm Sewer - 36"	LF
401.81	Abandon Storm Sewer - 42"	LF
401.82	Abandon Storm Sewer - 48"	LF
401.83	Abandon Storm Sewer - (Size)	LF
401.84	Abandon Mini-Storm Sewer	LF
401.85	Abandon Culvert - 10"	LF
401.86	Abandon Culvert - 12"	LF
401.87	Abandon Culvert - 15"	LF
401.88	Abandon Culvert - 18"	LF
401.89	Abandon Culvert - 21"	LF
401.90	Abandon Culvert - 24"	LF
401.91	Abandon Culvert - 27"	LF
401.92	Abandon Culvert - 30"	LF
401.93	Abandon Culvert - 36"	LF
401.94	Abandon Culvert - 42"	LF
401.95	Abandon Culvert - 48"	LF
401.96	Abandon Culvert - (Size)	LF

Page Intentionally Left Blank

SECTION 402

SEWER TESTING

402.1 General

For all tests, the Contractor shall install, backfill and clean all sewer mains, sewer laterals, and any related appurtenances prior to performing any tests. Silt, debris, or other foreign matter shall not be allowed beyond the downstream manhole while cleaning the line to be tested without being captured. All water main, storm sewer, and services shall be installed prior to testing the sanitary sewer, but prior to the placement of a permanent surface.

All testing by the Contractor shall be performed in the presence of the Engineer. The City may not consider any testing not observed by the Engineer for acceptance. All sanitary sewers, except relays with active connected building sewers, shall be required to pass a leakage test before they are accepted by the City. All flexible sewer pipe shall be required to pass a mandrel, go-no-go test prior to acceptance by the City. All sewers are subject to closed circuit internal televising if they fail either the leakage test or the mandrel test.

402.2 Materials

Vacant

402.3 Construction Methods

1. Deflection Test for Flexible Sewer Pipe

All flexible pipe eight (8) inches and larger, or at the request of the Engineer, shall be tested for acceptance with an approved mandrel, go-no-go after the pipe has been installed, the backfill compacted, and other underground utilities within close proximity, such as water main, storm sewer, and services have been installed and backfilled, but before placement of a permanent surface. For acceptance, the mandrel must pass through the entire section between manhole structures in one pass when pulled by hand without the use of excessive force or the aid of a vibratory device.

The Contractor shall supply a testing mandrel in conformance with the specifications of this section. The Contractor shall furnish the equipment and labor for making this acceptance test or provide a qualified, approved Subcontractor. The mandrel shall be of a shape similar to that of a true circle enabling the gauge to pass through a satisfactory pipeline with little or no resistance. The mandrel shall be of a design to prevent it from tipping from side to side and to prevent debris build-up from occurring between the channels of the adjacent fins or legs during operation. Each end of the core of the mandrel shall have fasteners to which the pulling cables can be attached. The mandrel shall have nine various sized fins or legs of appropriate dimensions for various diameter pipes. Each fin or leg shall have a permanent marking that states its designated pipe size and percent deflection allowable. The diameter of the mandrel shall be equal to ninety-five (95) percent of the base inside diameter of the pipe. The Contractor

shall furnish the Engineer a table showing the base inside diameter and the five (5) percent deflection mandrel dimension for each pipe diameter called for in the plans. The base inside diameter shall be the minimum pipe inside diameter derived by subtracting the statistical tolerance package, defined below, from the pipe's average inside diameter. The ninety-two and one half (92.5) percent device may be used if testing is done thirty (30) days or more after the pipe has been installed, the backfill compacted, and other underground utilities within close proximity, such as water main, storm sewer, and services have been installed and backfilled but prior to the placement of a permanent surface and with written permission of the Engineer.

For corrugated PVC pipe: Average inside diameter = average inside diameter.

For corrugated PE pipe: Average inside diameter = nominal inside diameter.

$$\text{Tolerance package} = (A^2 + B^2 + C^2)^{1/2}$$

Where: The tolerance package is defined as the square root of the sum of squared standard manufacturing tolerances.

A = outside diameter tolerance (ASTM 949) for corrugated PVC pipe and inside diameter tolerance (AASHTO M-294) for corrugated PE pipe.

B = excess wall thickness tolerance = zero (0) for both corrugated PVC pipe and corrugated PE pipe.

C = out-of-roundness tolerance (ASTM 949) for corrugated PVC pipe and three (3) percent of nominal inside diameter for corrugated PE pipe.

Any section of completed pipe failing to pass this deflection test shall be repaired or replaced and retested at the Contractor's expense. All testing shall be done under the observation of the Engineer.

2. Sewer Leakage Test

All leakage tests shall be completed and approved after the sanitary sewers, structures and appurtenants have been installed, backfilled and cleaned, but prior to the placement of a permanent surface. The leakage test may be either a water infiltration test or a low-pressure air test. The Contractor shall furnish all equipment, materials, labor and other work necessary to complete the tests or provide a qualified, approved Subcontractor. The Contractor may perform either the water infiltration test or low-pressure air test, except as specified below.

When leakage or infiltration exceeds the amount allowed by the specifications, the Contractor at their expense shall locate the leaks and make the necessary repairs or replacements in accordance with the specifications to reduce the leakage or infiltration to the specified limits. Any individually detectable leaks shall be repaired, regardless of the results of the tests.

Leakage tests shall be made on all completed pipelines using one of the following tests:

3. Water Infiltration Test

If, in the opinion of the Engineer, excessive groundwater is encountered in the construction of a section of a sewer, the Water Infiltration Test shall be used for the leakage test. After the completion of pipe lines laid below the groundwater level and groundwater conditions have returned to normal, the line shall be tested for water infiltration. A minimum positive head of two (2) feet of groundwater over the top of the pipe shall be available for this test to be considered valid. The Contractor may simulate this condition, at no cost to the City, by flooding the trenches with prior approval of the Engineer.

The outlet end of the sewer at the manhole shall be closed sufficiently to prevent the entrance of water, and pumping of groundwater. Pumping shall be discontinued for at least three (3) days after which the section shall be tested for infiltration. The length of the test shall be not less than one (1) hour in duration.

The rate of infiltration into each individual reach of sewer between adjoining sewer manholes shall not exceed two hundred (200) gallons per day per inch diameter per mile of sewer, after groundwater conditions have returned to normal.

The maximum allowable infiltration, expressed in gallons per hour are shown in the following table for various pipe sizes. Visible leaks, defective joints and defective pipe shall be satisfactorily repaired or replaced.

Allowable Limits of Infiltration
Based on 200 Gal/Inch Diameter/Mile

Diameter of Sewer (Inches)	Infiltration Per Ft. Per Hr. (Gallons)	Diameter of Sewer (Inches)	Infiltration Per Ft. Per Hr. (Gallons)
4	0.0063	21	0.0332
6	0.0095	24	0.0378
8	0.0126	27	0.0426
10	0.0158	30	0.0474
12	0.0190	36	0.0568
15	0.0237	42	0.0663
18	0.0284	48	0.0758

4. Low Pressure Air Test

If, in the opinion of the Engineer, sufficient groundwater is not present to conduct the Water Infiltration Test, the Low Pressure Air Test shall be used for the leakage test.

The Contractor shall furnish all materials, equipment, and labor for conducting an air test. Air test equipment shall be approved by the Engineer. The final leakage test shall be conducted in the presence of the Engineer and in accordance with the appropriate ASTM standards.

Each section of sewer to be tested shall be flushed and cleaned prior to conducting the low-pressure air test. This serves to clean out any debris and produces more consistent results.

Each section of sewer shall be tested between successive manholes by plugging and bracing all openings in the mainline sewer and the upper ends of all house connection sewers. One of the plugs should have an inlet tap, or other provision for connecting a hose to a portable air control source. Air shall be added slowly to the test section until the pressure reaches 4.0 pounds per square inch of gauge pressure (psig). Do not exceed 9.0 psig. After a pressure of 4.0 psig is obtained, the pressure shall be allowed to stabilize between 3.5 psig and 4.0 psig for at least two (2) minutes. This allows the air temperature to stabilize in equilibrium with the temperature of the pipe walls. The pressure will normally drop slightly until the temperature equilibrium is obtained. During this period, all plugs should be checked with a soap solution to detect any plug leakages.

The test shall begin once the air supply is disconnected and the pressure decreases to 3.5 psig. The time for the pressure to drop 1.0 psig between 3.5 psig and 2.5 psig shall be recorded and compared to the total required test time as found in Table 1 - Low Pressure Air Test Times to determine if the rate of actual air loss is within the allowable limit. In computing the total required test time from Table 1, the required test time for the length and pipe size of any service connections (i.e. laterals) in the test section shall be added to the required test time for the length and pipe size of mainline sewer being tested.

If the total required test time elapses before the 1.0 psig pressure drop occurs, the test section shall be accepted. If the total required test time does not elapse before the 1.0 psig pressure drop occurs, the air loss rate in the test section shall be considered excessive and the section of pipe shall be considered to have failed the test.

Upon completions of the air test, the bleeder valve is opened and all air is allowed to escape. Plugs should not be removed until all air pressure in the test section has been released. No one should be allowed in the trench or manhole while the pipe is being decompressed.

It shall be noted that the aforementioned test pressures assume no groundwater is present over the pipe. If groundwater is present, the test pressures must be increased 0.43 psi for every foot of groundwater depth to offset the depth of groundwater over the sewer line. If the groundwater level is two (2) or more feet above the top of pipe at the upstream end of the section, or if the required test pressure is greater than 9 psig, the air test method should not be used and the water infiltration test shall be used in its place.

TABLE 1
Low Pressure Air Test Times

Minimum allowable times (Min:Sec) required for loss of air pressure from 3.5 psig to 2.5 psig for size and length of pipe and laterals indicated, i.e., total test time = (T) length of mainline + (T) total length of laterals. (Based on 0.003 cfm per square foot with a minimum loss of 2.0 cfm and a maximum of 4.5 cfm.)

	Pipe Diameter "D" in Inches									
Length of Pipe Tested		4	6	8	10	12	15	18	21	24
	25	0:04	0:10	0:18	0:22	0:27	0:31	0:36	0:45	0:54
	50	0:09	0:21	0:36	0:45	0:54	1:03	1:12	1:30	1:48
	75	0:13	0:31	0:54	1:07	1:21	1:34	1:48	2:15	2:42
	100	0:18	0:42	1:12	1:30	1:48	2:06	2:24	3:00	3:36
	125	0:22	0:52	1:30	1:52	2:15	2:37	3:00	3:45	4:30
	150	0:27	1:03	1:48	2:15	2:42	3:09	3:36	4:30	5:24
	175	0:31	1:13	2:06	2:37	3:09	3:40	4:12	5:15	6:18
	200	0:36	1:24	2:24	3:00	3:36	4:12	4:48	6:00	7:12
	225	0:40	1:34	2:42	3:22	4:03	4:43	5:24	6:45	8:06
	250	0:45	1:45	3:00	3:45	4:30	5:15	6:00	7:30	9:00
	275	0:49	1:55	3:18	4:07	4:57	5:46	6:36	8:15	9:54
	300	0:54	2:06	3:36	4:30	5:24	6:18	7:12	9:00	10:48
	325	0:58	2:16	3:54	4:52	5:51	6:49	7:48	9:45	11:42
	350	1:03	2:27	4:12	5:15	6:18	7:21	8:24	10:30	12:36
	375	1:07	2:37	4:30	5:37	6:45	7:52	9:00	11:15	13:30
	400	1:12	2:48	4:48	6:00	7:12	8:24	9:36	12:00	14:24
	425	1:16	2:58	5:06	6:22	7:39	8:55	10:12	12:45	15:18
	450	1:21	3:09	5:24	6:45	8:06	9:27	10:48	13:30	16:12
	475	1:25	3:19	5:42	7:07	8:33	9:58	11:24	14:15	17:06
	500	1:30	3:30	6:00	7:30	9:00	10:30	12:00	15:00	18:00

It is not necessary to hold the test for the whole period when it is clearly evident that the rate of air loss is less than the allowable.

5. Sanitary Sewer Force Main

All Sanitary sewer force main shall be tested in accordance with Section 501.7 – Pressure Testing of Water Mains.

6. Manhole Structures

Manhole structures shall be individually tested for infiltration when directed by the Engineer. The rate of infiltration shall not exceed two hundred (200) gallons per day per mile of vertical height (wall only) per inch internal diameter (or maximum horizontal dimension of structure). Two hundred (200) gallons per day per mile of vertical height per inch internal diameter equals to the following rates:

Maximum allowable manhole structure infiltration:

48” dia. manhole structure = 0.0758 gallons per vertical foot per hour
60” dia. manhole structure = 0.0947 gallons per vertical foot per hour
72” dia. manhole structure = 0.1136 gallons per vertical foot per hour

7. Test Failure

In the event the water infiltration or the loss of air exceeds the rates specified, the Contractor shall locate the point or points of leakage and repair the pipeline or manhole structure to the satisfaction of the engineer at the expense of the Contractor. All visible leaks in sewer access structures shall be repaired even though the leakage test requirements are met. Acceptance and final payment for sewers completed shall not be made until any leakage, which exceeds the rate specified, has been corrected.

402.4 Measurement & Payment

The City will pay for the work specified at the contract unit price under the following bid item and if not specified within a Bid Proposal shall be considered incidental to other work:

ITEM #	DESCRIPTION	UNIT
402.01	Sewer Testing	LS
402.02	Sewer Testing (8")	LF
402.03	Sewer Testing (10")	LF
402.04	Sewer Testing (12")	LF
402.05	Sewer Testing (15")	LF
402.06	Sewer Testing (18")	LF
402.07	Sewer Testing (21")	LF
402.08	Sewer Testing (24")	LF
402.09	Sewer Testing (27")	LF
402.10	Sewer Testing (30")	LF
402.11	Sewer Testing (36")	LF

SECTION 403

SEWER TELEVISING

403.1 General

The work under this Section shall consist of the general requirements for providing quality sewer televising images, and to obtain sewer and structure conditions.

403.2 Materials

Vacant

403.3 Construction Methods

A. Definitions and Terms.

The term "sewer", as used in this scope of services, shall mean a sewer carrying storm and/or sanitary flow including inlet leads and day lighted storm sewer pipe.

The term "manhole", as used in this scope of services, shall mean an endpoint to a sewer line. "Manhole" may be used to identify a storm or sanitary entry point, catch basin, inlet or other sewer line end point.

The term "permanent obstruction", as used in this scope of services, shall be defined as any non-removable blockage which, in the opinion of the Engineer, would interfere with the televising operation, such as: roots, mineral deposits, collapsed pipe, protruding connections, or dropped joints.

The term "light cleaning" is defined as the removal of debris/dirt in a sewer with an accumulation of debris/dirt less than or equal to twenty (20) percent of the pipe area.

The term "heavy cleaning" is defined as the removal of debris/dirt in a sewer with an accumulation of debris/dirt greater than twenty (20) percent of the pipe area.

The term "lamp the line" is defined as viewing the line with a light and mirror when it is impossible to televise the sewer.

B. Sewers To Be Televised.

A notice of sewers to be televised will include the size, location, and length of the sewers to be televised and manholes to be inspected shall be determined and provided by the Engineer. The annual amount of sewer televising may vary greatly due to unforeseen circumstances.

It is expected that at various times during the year, sewers will have to be televised without the preparation of a list. The Contractor shall commence televising within five (5) working days after the Engineer's notice to televise these sewers.

If the Contractor is unable to meet this requirement, the Contractor shall have a sub-contractor, approved by the Engineer, that will be able to commence televising within five (5) working days. Televised footage by the sub-contractor shall be paid at the same bid price. In the event that both the Contractor and the sub-contractor are unable to commence televising in the required time, the City shall have the right to acquire the services of another Contractor.

The City may require emergency televising of a sewer line within twenty-four (24) hours of notice. The City reserves the right to use another contractor to complete emergency work should the Contractor be unable to respond within the required 24 hour time period.

The City has televising equipment and reserves the right to televise sewer on an as needed basis, an emergency basis, and for inlet leads. Sewer televising, by the City, will not substantially impact the amount of televising completed by the Contractor.

C. General Sequence of Events

The general sequence of services requested shall be the Contractor’s discretion. After receipt of the notice of sewers to be televised, the Contactor will provide a written schedule within ten (10) calendar days of receipt of the notice. The televising shall be completed in a sequential order on a designated roadway section prior to starting another section of sewer on a different roadway.

At the request of the Engineer, for those areas with high commercial/industrial or special situations where additional coordination is appropriate, the Contractor shall distribute notification to the residents/businesses along the sections to be televised three (3) days in advance, prior to commencement of any field activities and as approved by the Engineer.

The Contractor shall be limited to working Monday through Friday, 7:00 AM to 10:00 PM. For all work on weekends and holidays, the contractor shall submit a written request for approval to the Engineer a minimum of 72 hours in advance. If the Contractor elects to work on a Sunday or Holiday, the Contractor shall reimburse the City of Green Bay for additional wages accumulated because of Sunday and/or Holiday pay.

The Contractor shall designate a project coordinator who shall be available for meetings, discussions, and information as needed.

The Engineer shall have access to the television screen at all times during the televising.

D. Equipment

General Requirements:

The type of equipment and the method used shall be based on the sewer conditions at the time services commence. The equipment shall be required to produce the results specified herein. Selection of the equipment shall be at the Contractor's discretion.

The equipment selected for televising the sewers shall be capable of adapting to reasonable levels of dirt, grease, rocks, bricks and other deleterious materials and obstructions that may be encountered in the sewers and manholes.

The camera shall be mounted on a transport platform, which will keep it above water. Use of a raft is not encouraged but will be accepted in cases where the City agrees other means are not practical. If a raft is utilized, means must be employed to keep the raft centered in the pipe, to the maximum extent practical.

The video operator must have at least one (1) year of experience in televising sewers, manholes and lateral connections.

The video operator shall be Pipeline Assessment and Certification Program (PACP) certified by the National Association of Sewer Service Companies (NASSCO).

Tape Requirements:

Video shall be high quality color in DVD or VHS format and recorded in either SP or LP modes. Video recordings made in SLP or EP modes are not acceptable. Any out-of-focus video recordings, or portions thereof, shall be cause for rejection of the video recording and will necessitate re-televising at the Contractor's expense.

Camera Requirements:

The televising inspection equipment shall have an accurate footage counter which displays on the monitor and storage media the exact distance of the camera from the starting centerline. The lighting system shall be adequate for quality pictures. The camera shall be the remotely operated pan and tilt type. The rotating camera and light head configuration shall provide 240 degrees of pan and tilt angle measuring centerline to centerline and 70 degree lens viewing angle. The camera shall be operative in 100 percent humidity conditions. The camera shall be equipped with the necessary circuitry to allow for remote adjustment of the optical focus, iris, and zoom from the power control unit at the viewing station.

Manual winches, power winches, TV cable and powered rewinds or other devices that do not obstruct the camera view or interfere with proper documentation of the sewer line conditions may be used to move the camera through the sewer line.

The camera must be color and shall provide a minimum of 460 lines of horizontal resolution and 400 lines of vertical resolution, and 600 lines of resolution is preferred. The image pick-up device shall contain in excess of 379,000 picture elements (pixels). Scanning shall be 525 lines, 60 fields, 30 frames, interlaces 2:1 – NTSC color standards. Geometrical distortion of the image shall not exceed one percent.

The camera shall be equipped with a remote iris to control the illumination range for an acceptable picture between 3 and 10,000 Lux. A high intensity lighting system shall be furnished to provide the proper illumination to inspect down the pipe, along the pipe crown, sidewalls and laterals while televising. The lighting system shall be designed for inspecting connections, pipe walls and pipe joints at distances up to five feet.

Obtaining Water:

Obtaining water for televising and for all other purposes shall be the Contractor's responsibility. Contractors must apply for a permit at the Green Bay Water Utility office at 631 South Adams Street for use of the bulk water stations. When the permit is issued, the contractor will receive an operating key and authorization tags. The tags must be displayed on the dash of any vehicles drawing water. There are nine bulk water stations throughout the City. The location of these bulk water stations are listed below. Only these bulk water stations are available to the contractors from April 1st through November 1st weather pending. From November 1st, to April 1st, the contractors must draw water at the Huron Road water tower "Hot Box" located at the southwest corner of Huron Road and Finger Road or the "Hot Box", 225 feet north of Velp Avenue on Columbia Avenue.

Contractors are responsible for all costs associated with the use of the bulk water stations including the cost of water used.

<u>WEST SIDE OF GREEN BAY</u>

1100 Columbia Avenue – Year-Round Site
2325 Hutson Road (North side of Hutson Road-500' East of Hinkle Street)
Morley Road @ Moraine Terrace (SE corner)
2700 block of West Mason (S. Frontage Road)
400 block of Liberty St. (300 Ft. W. of Broadway)
Florence Avenue @ Janice Avenue (NE Corner)

<u>EAST SIDE OF GREEN BAY</u>

100 Bay Beach Road (W. of Quincy)
Clay Street @ Eliza Street (NE Corner)
Sussex Road – 500' N. of Scottwood Dr. (CTH "I")
720 Huron Road – Year-Round Site
2200 Block of Main Street (Frontage Road by Burger King)
Gershwin Dr. – 100' W. of Lake Largo Dr.

E. Execution

Existing Conditions Prior to Televising:

The type of sewers to be televised include, but not limited to, brick, cast-in-place concrete, precast reinforced concrete, precast non-reinforced concrete, clay tile, ductile iron, thermoset plastic pipe.

All damage caused by televising operations shall be the responsibility of the Contractor.

The Contractor shall perform "light cleaning" prior to or during televising operations. No additional compensation will be provided for this "light cleaning". No material shall be passed from section to section. All sludge, dirt, sand, rock, grease, roots, and other solid or semi-solid materials resulting from the cleaning operation shall be removed at the upstream or downstream manhole of the section being cleaned.

In the event where the depth of dirt/debris exceeds that defined as "light cleaning", the Contractor shall notify the Engineer of the segment(s) which need to be "heavy cleaned" prior to commencing with the additional cleaning in writing via E-mail or Fax and by phone or meeting. The City has the right to direct others to provide the "heavy cleaning" services.

Disposal of Materials Removed:

All solids or semi-solids resulting from the cleaning and televising operations shall be removed from the site by the Contractor on a daily basis. The Contractor shall not deposit or accumulate debris in the sewer or on the inspection site. Debris or dump boxes shall not remain on the public right-of-way during non-working hours.

The Contractor is responsible for disposing of any materials removed during the cleaning operations and the cost associated with the disposal.

Acceptance of Televised Sewers:

The City retains the right to determine the acceptance or rejection of all services. In the event of a rejection of the completed services, corrective action shall be implemented by the Contractor to make services acceptable to the City.
DVD's or VHS videos, manhole inspection database, CCTV database with PACP coding, one (1) bound copy of the completed Manhole Inspection Forms, and one (1) bound copy of the Television Inspection Report will be submitted to the Engineer on a monthly basis. The tab on videos shall be removed so as to prevent accidental erasure.

Prior to approval a payment of invoices the Engineer shall verify the following:

- Quality of the tapes
- Quantity of the televising
- Completeness of the data base

Protection during Televising Operations:

Precautions shall be taken to protect sewers and sewer manholes from damage that might be inflicted by improper use of televising equipment. Necessary precautions shall be taken to ensure that the water pressure created, by use of hydraulically propelled equipment or any tools which retard or diverts the flow of water in the sewers, does not cause any damage or flooding to public or private property being served by the sewer or up-stream of the sewer being televised.

The Contractor shall be responsible for all damage to public and private property as a result of any televising operations; all costs associated with the damage shall be the responsibility of the Contractor.

The Contractor's attention is called to the fact that flows in the existing sewers could flood his operations, especially in the event of heavy rains. The Contractor shall be prepared at all times to safeguard workmen and protect the services from damage by flooding and shall maintain flow at all times in the existing sewers.

Televising Procedures by Contractor:

The camera shall be moved through the sewer line in either direction at a uniform rate, at a speed no greater than 30 feet per minute, stopping when necessary to ensure proper documentation of the condition of the sewer.

If during the televising operations, the camera will not pass through an entire sewer section due to a permanent obstruction, the Contractor shall re-set his equipment in a manner such that the inspection can continue opposite the obstruction; the movement shall be in a direction such that the obstruction can be televised. If an obstruction is encountered when televising the sewer from the opposite direction, the survey may be abandoned. In such a case, the Contractor will be compensated for the remaining un-televised sewer at half the bid price.

When conditions exist making it impossible to televise the sewer, the Contractor shall lamp the line, as determined by the Engineer.

It shall be the Contractor's responsibility to locate all live and dead drains and lateral sewers connected to the section being televised.

All sewer and lateral connections, manhole risers, missing bricks, voids and dark areas are to be televised. When passing a lateral connection the camera shall pan and tilt into the lateral and give a brief narrative of the condition. The camera shall be held in the viewing position long enough such that proper evaluation can be performed.

Telephones, radios, or other suitable means of communications shall be set up between the manholes of the sewer being inspected to ensure that adequate communications exist between members of the televising crew, whenever non-remote powered and controlled winches are used to pull the television camera through the line.

If necessary, a high-pressure water jet spray shall be utilized downstream of the camera to remove water from sags or depressions to ensure that the entire pipe cross-section can be viewed. The spray shall be equally spread out within the sewer to define the contour shape of the sewer.

If the camera should go underwater during televising the Contractor shall adjust the camera height and/or take other steps to reduce the water level and re-televise the affected portion of the sewer.

Accurate distance measurement is important. The closed circuit televising system must have an electronic or mechanical system, which accurately locates the camera from the reference manhole. The system shall be accurate, at a minimum, to 0.1 feet per 100 feet. Marking on the cable, or similar methods, which would require interpolation for depth of manhole will not be acceptable.

The accuracy of the measurement meters shall be checked daily by use of a walking meter, roll-a-tape, or other suitable device. Measurements shall begin at the centerline of the up-stream manhole. Footage shall be shown on the video data view at all times.

The Contractor shall measure and record the depth of debris/dirt and water in each manhole.

Documentation of Televising:

Audio and written documentation in the NASSCO PACP coding methodology shall accompany all DVDs or videos submitted to the Engineer.

The DVDs or videos shall be numbered consecutively beginning with 00-07 (tape number followed by the year of televising) and continue until completion of televising for the year. The corresponding written report shall indicate the DVD or video on which the televising is recorded.

The digital tape counter shall be set at "0000" at the start of each manhole and the counter reading recorded on the written report at the start and end of each reach of sewer thereon. The video and audio reports shall become the property of the City upon submittal.

The voice recording on the DVDs or videos shall make brief but informative comments on data of significance, including, but not limited to: the location of unusual conditions; storm sewer and lateral connections; collapsed sections; the presence of scale, root intrusion, corrosion, and other discernible features. Manholes are to be cross-referenced to a house address and specified as storm or sanitary sewer.

If the camera is stopped for more than one (1) minute the Contractor is to address the reason for the delay on the video.

The DVDs or videos shall include the following:

Printed labels on DVD or video container and DVD or video cartridge with Task Order Number or Project Identification number, location information, date, format, and other descriptive information.

At the beginning of each sewer section the Data View shall be displayed with the following information:

1. Task Order or Project Identification Number
2. Date and time of inspection
3. Upstream and downstream manholes, referenced to street address where applicable
4. Current distance along reach (counter footage)
5. Contractor's name

Brief Written Report

1. Same requirements as listed in Data View
2. Identify storm or sanitary sewer
3. Weather conditions
4. Names of inspectors and technicians
5. Location of unusual conditions
6. Location and clock position and size of sewer and lateral connection
7. Location of structural defects, circular cracks, and offset joints, root intrusions, sag areas, deposits, deflections (horizontal & vertical), presence of erosion and locations of obstructions
8. Locations of points of infiltration
9. Location of collapses or areas requiring repair services, such as but not limited to, longitudinal cracks and displacements
10. Location and severity of roots and infiltration

Inspection of Manholes:

The Engineer will provide the Contractor with a sample manhole inspection form and a Microsoft Access Version 2000 database, which the data will then be inputted or imported into.

Surface Restoration:

Surface restoration of any areas damaged during televising operations shall be made to a condition equal to or better than original conditions at the sole expense of the Contractor.

Contractor shall be responsible for the removal of all equipment in the sewers as a part of the Work. Should a piece of equipment become lodged in a sewer, the Contractor shall be responsible for all costs incurred to remove all the equipment inserted into the sewer, including but not limited to surface removal, excavation, sewer repairs, backfilling and surface restoration.

F. Permits

Confined Spaces:

The service under this Contract may require entry into confined spaces as defined by Part II, Department of Labor Occupational Safety and Health Administration 29 CFR Part 1910 Permit – Required Confined Spaces for General Industry: Final Rule.

The Contractor shall perform all services that apply to confined spaces in accordance with 29 CFR Part 1910 Permit – Required Confined Spaces for General Industry: Final Rule. The Contractor shall develop and maintain a Confined Space Entry Permit Program as required by 29 CFR Part 1910. The Confined Space Entry Permit Program shall include the requirements that a designated employee of the Contractor be present at the locations where the Contractor's personnel enter confined spaces in order to issue a permit to the employee prior to entering the confined spaces.

The Contractor shall provide training for the Contractor's Confined Space Entry Permit Program to all employees and sub-contractors associated with the services provided in the Contract.

The Contractor shall provide all necessary labor, equipment, power, lighting, ventilation equipment, gas detection equipment and appurtenances required as part of the Confined Space Entry Permit Program.

Prior to beginning any services associated with this Contract, the Contractor shall submit to the Engineer a copy of the Contractor's Confined Space Entry Permit Program as a record that the Confined Space Entry Permit Program is in existence.

The Contractor shall be responsible for the safety of the Contractor's staff at all times.

Street Obstruction Permit:

The Contractor is responsible for obtaining a "Street Obstruction Permit" prior to doing any work (i.e. cleaning, televising, etc.) on City streets and provide proper traffic control (signing and barricading). The "Street Obstruction Permit" can be obtained without charge, at the Department of Public Works, Engineering Office, Room 300, City Hall, 100 North Jefferson Street.

The Contractor shall perform all traffic control in accordance to available standards including the latest edition of the Manual of Uniform Traffic Control Devices (MUTCD). The Contractor shall be responsible for the safety of the public traveling in the right-of-way and around their crews and equipment. In the event improper traffic control and signing is observed a verbal order will be given to the crew on site to cease operations immediately and fix the deficiencies. This verbal order will be followed up with a written notice.

G. Completion

The City of Green Bay expects that all requested close circuit televising be completed in a timely manner based on quantity requested. The Contractor shall complete the requested televising within ninety (90) days of the initial request and shall comply with the deliverable schedule as set out. The City of Green Bay reserves the right to substitutes pipes and manholes for inspection in like quantities.

H. Project Deliverables

The Contractor shall deliver monthly the following work products to the Engineer, unless in an emergency situation when the Engineer will specify the delivery time:

1) Summary log documenting the length, type and size of the sewer sections televised, date completed, and total footage
2) One (1) bound copy of Television Inspection Reports for all sections closed circuit televised
3) One (1) bound copy of completed Manhole Inspection Forms
4) List of all sewers requiring heavy cleaning
5) Included with the monthly submittal, the Contractor shall deliver the DVDs or videos with audio voice over for all sections closed circuit televised.

All costs associated with providing the project deliverables shall be included in the Contractor's price per lineal foot bid or manholes inspected.

I. Cancellation Notice

When Sewer Televising is let as a bid contract through the City, the City reserves the right to cancel this agreement at any time with a thirty (30) day written advance notice.

403.4 Measurement and Payment

A. Quantities:

Quantities listed in the Bid List reflect an estimated value. The actual length of sewer to be televised shall be determined in the field by the Contractor and verified by the Engineer.

With the approval of the Engineer the Contractor may make a continuous run between several manholes without resetting the digital tape counter.

The cost of televising shall include all necessary labor and material required to provide cleaning, one hundred (100) percent video-taping and written reports of the sewers to be televised. Any work incidental to providing the video and audio reports, such as, but not limited to, stringing of cable, access to manholes, restoration, flow controls, typing, etc. shall be included in the cost of televising.

The actual length of sewer televised from center to center of manholes will be measured for payment. Payment for inlet leads will be from the center of the structure to the end of the lead either into the downstream manhole or the wall of the storm sewer. Payment will be made at the unit price per lineal foot of sewers televised.

Payment for manhole inspection shall be made at the unit price per each manhole inspected. The cost to perform the manhole inspections and completion of the inspection forms shall be included in the cost per each manhole inspected.

The Contractor shall submit a fixed price quote for emergency work requiring televising sewers with a twenty-four (24) hour notice. The fixed price shall be per hour of televising on the specified site or street.

The Contractor shall submit a unit price per lineal foot of heavy cleaning required and performed as approved.

B. Rejected Segments:

The Engineer reserves the right to reject any sewer or manhole segment not inspected in the compliance with these specifications. Rejected segments shall be re-inspected and the segment shall be compensated for at the Contract unit price once compliance with the specifications has been achieved.

C. Invoicing:

The Contractor shall invoice the City for payment at the time of delivery of completed televised section.

The City will pay for measured quantities at the contract unit price under the following bid item:

ITEM #	DESCRIPTION	UNIT
403.01	Standard Televising – All Sizes	LF
403.02	Inlet Lead Televising – All Sizes	LF
403.03	Heavy Cleaning – All Sizes	LF
403.04	Emergency Televising – All Sizes	HOUR
403.05	Manhole Inspection	EACH

Page Intentionally Left Blank

SECTION 404

TRENCH EXCAVATION, BEDDING AND BACKFILL

404.1 General

Perform work in accordance with the provisions of WisDOT Standard Specifications for Highway and Structure Construction Section 209, 301, 305, 310, and 501 except as hereinafter modified.

404.2 Materials

Bedding shall conform to WisDOT ¾" dense graded base gradation. The following alternate bedding material specifications can be used in wet soil conditions or as approved by Engineer:

Sieve Size	Percent Passing by Weight
1"	100
3/4"	90 - 100
3⁄8"	20 - 55
No. 4	0 - 10
No. 8	0 - 5

Gravel Backfill shall conform to WisDOT ¾" or 1 ¼" dense graded base gradation requirements.

Granular Backfill shall conform to WisDOT Grade 1 gradation requirements.

Excavated Material from the same trench may be used as backfill in the same trench, and will be considered as select fill if it meets the following specifications and is evenly graded, free from debris and organic material:

Sieve Size	Percent Passing by Weight
3"	100
No. 100	0 - 30
No. 200	0 - 12

The slurry backfill shall meet the following specifications:

<u>100 psi slurry</u>
50 lbs. Portland cement
2,427 lbs. sand
70 gallons water
200 lbs. Fly Ash
6% +/- 1% total air

Concrete Blanket and Concrete Encasement shall consist of Grade A concrete mix.

404.3 Construction Methods

A. Trench Excavation

All of the work of constructing sewers and additional excavation shall be done in accordance with the applicable provisions of the "Wisconsin Administrative Code Department of Safety and Professional Services" including sections for "Trench Excavation and Tunnel Construction and any other additional requirements included in the Contract Document.

Unless otherwise provided in the Contract or permitted by the Engineer, the work of constructing sewers and related works shall be done in open trenches and in a manner to protect the existing and proposed pipelines or sewers from unusual stresses.

The trenches shall be excavated in conformity with the required alignment and grades as shown on the plans and as laid out in the field by the Engineer. It shall be understood that the elevations for sewers, as shown on the plans, are subject to such revisions as may be necessary to fit field conditions and that the Engineer reserves the right to adjust the profile grades from those shown on the plan. No adjustment in compensation will be made for grade adjustments less than one (1) foot above or below the elevations shown on the plans. Compensation for grade adjustment greater than one (1) foot above or below the elevations shown on the plans will be considered.

The Contractor shall remove all topsoil along the trench line to the width of the proposed trench before beginning excavation. Topsoil removed shall not be used as backfill in the trench. If the trench line is finished with pavement or other structures, when specifically called out on the plans, removal of those items shall be completed as specified in Section 401, Removals. When these items are not called out they will be incidental to the excavation of the utility trench.

The width of the trench shall be ample to permit the pipe bedding material and backfill to be placed and compacted as specified in these general specifications. Trenches shall be of sufficient width, when required to permit the placing of trench supports, sheeting and bracing.

In order to limit excessive loads on the pipe, the maximum width for sewers shall be such as to leave a clear space of not less than eight (8) inches nor more than twelve (12) inches between the earth wall, or the supporting sheeting, bracing or trench box where such is used, and the sides of the pipe. The trench width established by this pipe clearance, measured at the spring line, shall be applicable to that portion of the trench from one (1) foot above the top of the pipe to the bottom of the trench.

When the trench width above the top of pipe is appreciably greater than that which is reasonably required by the project conditions in the judgment of the Engineer, any additional cost for backfill material, surface restoration or other items that are the result of such excess trench width, shall be borne by the Contractor.

Surplus material includes all material from excavation not needed, or is unsuitable for backfilling trenches. Any surplus material shall be removed from the site as described in Section 303, Excavation.

The Engineer reserves the right to limit the extent of excavation in advance of pipe laying and backfilling depending on the nature of the soil and other conditions affecting the work.

B. Extra Excavation in Poor Soils

All work involved in forming a satisfactory foundation at depths of six (6) inches or less below the bottom of the pipe will be considered incidental to construction of the sewer. If, in the opinion of the Engineer, an artificial foundation is necessary because of the nature of the excavated material, additional excavation may be required. Additional Excavation are areas where unsuitable materials are encountered; these areas may be indicated on the drawings, in the specifications or areas where ordered in writing by the Engineer to excavate to such a depth as directed. Unsuitable materials shall be replaced with 1½" or 3" crushed stone bedding and mechanically compact the specified fill prior to laying the pipe.

C. Extra Excavation of Road Base

Extra excavation of the road base shall be required when the distance between the curb and trench or the distance between trenches is less than three (3) feet. The road base shall be excavated to a depth of eighteen (18) inches below the top of the existing pavement.

D. Bedding of Sewer Pipes.

The bedding, or foundation, for sewer pipes shall be constructed to prevent settlement of the pipes and to avert excessive pressure on the pipes in order to avoid rupture, leakage or deformation of the pipes. The sewer trench shall be excavated to a depth of four (4) inches below the bottom of the pipe, and bedding material shall be placed to provide a firm and uniform bearing for the barrel of the pipe with additional shaping under the bells on bell and spigot pipe. Where the Contractor over-excavates the bottom of the trench, the Contractor shall bring the bottom of the trench to proper grade by the addition of bedding material at the expense of the Contractor.

The width of the bedding material shall be equal to the width of the trench. After each pipe has been graded, aligned, and placed in final position on the bedding material and jointing is complete, additional bedding material shall be carefully placed and compacted under and around each side of the pipe. Depending on bedding material used from 404.2 the alternate gradation can be used up to the spring line of pipe and if using ¾" crushed aggregate base course then over the pipe until it is completely covered by 12 inches of bedding material. Said material shall be distributed along both sides of the pipe uniformly and simultaneously to prevent lateral displacement of the pipe. All the work providing proper pipe bedding shall be considered an integral part of installing the pipe and shall be completed immediately after the pipe is laid to the correct alignment and grade.

Clean or clear stone is prohibited unless written orders from the Engineer grant such limited use.

E. Backfilling Excavations

Unless otherwise provided, all trenches and excavations shall be backfilled immediately after the sewers and appurtenances have been constructed therein. In covering the sewers and filling around structures, the backfill material shall be brought up evenly on all sides so that no unbalanced pressure is brought to bear upon the pipe and structures.

The Contractor shall be required to backfill all excavations to the original ground elevation unless otherwise specified in the contract or ordered by the Engineer. All material used for backfill shall be free from cinders, ashes, organic material, boulder stones, or rocks larger than six (6) inches in diameter, frozen material or other materials which in the opinion of the Engineer, are unsuitable.

Walking or working on the completed pipe sewers, except as may be necessary in compacting and backfilling, shall be prohibited until the trench has been backfilled to an elevation at least two (2) feet above the top of the pipe. No trucks, vehicles, or other equipment shall be allowed within the limits of the trench prior to the completion of the backfilling operations, unless authorized by the Engineer for compaction or other purposes and if the pipe is adequately protected. Do not take backfill material from trench walls below an elevation of two (2) feet above the top of the pipe. Backfill and compact the remainder of the trench as specified herein.

Backfill material hauled to the project shall be dumped along the top of the trench beyond the reach of slides. Do not store imported materials such that it increases the stresses on the trench section. Place the backfill in lifts with the proper equipment. Backfill material may be dumped directly into the trench from trucks when the amount of material to be dumped is controlled by partially opening the tailgates, and only when authorized by the Engineer.

Trenches shall be backfilled to an elevation at least one (1) foot above the top of the pipe. The material for this portion of the backfill shall be the same classification as the bedding. The equivalent of backfill may be accomplished by lowering a clam bucket or material to a point immediately above and approximately one (1) foot from the sewer and slowly releasing the fill; for reinforced concrete pipe or corrugated metal pipe, the material may be deposited on a slope, equal to the angle of repose of the material, and allowed to flow progressively forward in such a manner as to avoid impact on the pipe and to avoid uneven pressures on either side of the pipe which may disturb its grade or alignment.

All corrugated metal culverts shall be backfilled and mechanically tamped to an elevation at least one (1) foot above the top of the culvert. Extreme care shall be taken so as to assure complete filling and compaction under the culvert and between the culvert and the walls of the trench. If trucks or other heavy equipment used on the project are to travel over the newly installed culvert, then the Contractor shall place a minimum cover of twelve (12) inches of fill over the culvert to protect it during this period. This protective layer of fill shall be thoroughly mechanically compacted.

In the event that excavations have been sheathed or braced, the Contractor shall carefully draw and remove the sheathing and bracing in a manner which will not disturb the completed work. All openings left in removing sheathing and bracing shall be carefully filled with approved backfill material and properly compacted.

The backfilling of tunnels and shafts for tunneling and jacking operations shall be in accordance with the requirements specified in the contract. Where not specified in the contract, such backfilling shall be as directed by the Engineer.

Where the grade of the sewer is such that, in the opinion of the Engineer, the top surface of the sewer shall require protection, an embankment of earth or other material, satisfactory to the Engineer, shall be constructed over the sewer by the Contractor. The height of the embankment shall be two (2) foot above the top of the pipe unless otherwise specified or directed by the Engineer. The width at the top of the embankment shall be not less than five (5) feet wider than the external width of the sewer. The sides of the embankment shall slope from the top of the embankment to the existing ground surface in a ratio of not less than three (3) feet horizontally to one (1) foot vertically. The material used to construct the embankment shall be the same as the required trench backfill material unless otherwise specified in the contract documents or approved by the Engineer.

All material used for backfilling trenches and other excavations shall be subject to the approval of the Engineer. Backfilling of the trench or embankment construction shall be considered incidental to the Contract.

Gravel backfill will be used for any construction on any street open to traffic and where any portion of the trench encroach into an a distance of five (5) feet from the back of the proposed or existing curb or edge of roadway without curb.

Granular backfill will be used for any construction on any proposed street and where any portion of the trench encroach into an additional distance of five (5) feet from the back of the proposed or existing curb or edge of roadway without curb.

Natural clay backfill may be used in trenches which are not in the limits as specified in Gravel Backfill or Granular Backfill or where allowed by the Engineer in writing.

In the event the Engineer rejects the excavated natural materials for backfilling due to the character of the material, including excess moisture content, gradation, composition, frozen material, or for whatever cause, the Contractor shall backfill the trenches and other excavations with the specified backfill or Granular Backfill as ordered by the Engineer. All rejected materials shall be removed from the site. In the event of inadequate moisture in the backfill materials, the Contractor shall add water in quantities deemed necessary to obtain the required compaction density. In the event the excavated materials contain excess moisture, the Contractor shall, as directed by the Engineer in writing:

1. Suspend all work on the project for that period of time as may be necessary to allow the backfill materials to dry sufficiently prior to backfilling and compacting the backfill material.

2. Replace the excavated materials, in whole or in part, with Granular Backfill or specified backfill at no additional cost to the City.

Where the moisture content of the excavated materials is such that drying or adding water is necessary prior to backfilling and compaction, the Contractor may furnish acceptable materials for the backfill and dispose of the excavated materials, all at no additional cost to the City.

F. Granular Backfill – Sand

Granular Backfill - Sand consists of furnishing and installing select imported fill in the trenches as specified in the Contract documents, indicated on the drawings, or ordered by the Engineer.

G. Gravel Backfill

Gravel Backfill consists of furnishing and installing imported gravel fill in the trenches as specified in the Contract documents, indicated on the drawings, or ordered by the Engineer.

Gravel backfill material shall be ¾" or 1 ¼"crushed stone meeting the requirements of the backfill stone.

H. Natural Backfill

Natural backfill shall mean acceptable existing material removed from the trench on site.

Natural backfill consists of furnishing and installing excavated material in the trenches as specified in the Contract documents, indicated on the drawings, or ordered by the Engineer.

I. Compaction of Backfill

Unless otherwise specified or directed by the Engineer, the backfill in all trenches and excavations shall be mechanically compacted in such a manner as to thoroughly consolidate the backfill material and not injure or disturb the pipe or other structure. The compaction of the backfill material shall be in accordance with the following requirements:

Mechanical compaction of trench backfill shall consist of depositing, spreading and leveling trench backfill in layers not exceeding 12" in thickness and compacting by means of mechanical tamping, vibratory compaction, etc. The top three feet, as measured from finished subgrade, shall be compacted to a minimum of 95 percent of Modified Proctor (AASHTO Designation T180-61). The remaining layers, down to the spring line of the pipe, shall be compacted to a minimum of 90 percent of Modified Proctor (AASHTO Designation T-180-61). This cost shall be considered incidental to the Contract.

Whenever the work of installing sewers takes place during cold weather, the specifications for trench compaction above shall be followed if practicable. If the specified compaction cannot be achieved, and the Engineer directs that the work may not be suspended until more favorable weather conditions exist, then the following procedures shall be followed:

1. No frozen material shall be allowed as backfill.

2. The material shall be compacted in six (6) inch lifts in a manner normally done during warm weather construction and to a minimum density of ninety (90) percent compaction below the top three (3) foot depth from the existing finished roadway elevation or the proposed roadway elevation.

3. If the top three (3) feet of material does not meet ninety-five (95) percent of maximum density, remove the existing material and re-place with granular backfill in new construction or ¾" crushed stone in streets open to traffic, using six (6) inch maximum lifts and compact to ninety-five (95) percent of maximum density.

4. The Engineer will have tests performed as necessary to provide uniformity of compaction.

5. As a guideline, construction should cease when the temperatures are too cold to achieve the above. The temperature shall be at least 15°F and rising with winds less than 10 mph to consider working in freezing conditions.

J. Furnish and Install Styrofoam Insulation

1. Description.

   Furnish and install Insulation consists of placing Insulation in order to insulate sewer mains and/or laterals. This section includes but is not necessarily limited to; all materials, equipment, labor and incidentals necessary to complete the insulation of the pipe. Sewers shall be insulated when the cover over the top of pipe is less than three (3) feet in depth or when directed by the Engineer.

2. Materials.

   a. Minimum thickness: Two (2) inches

   b. Minimum strength: 25 psi.

   c. High-density polystyrene board as manufactured by Dow Chemical Company, or equal.

   d. Insulation shall be furnished in four (4) by eight (8) foot sheets.

3. Construction Methods.

All work associated with furnish and install insulation shall conform to the following requirements:

a. After the pipe has been laid, backfill and compact the trench to a point six (6) inches above the top of the pipe.

b. Install two (2) inch thick by four (4) feet wide by eight (8) feet long Insulation pieces in the trench centered over the pipe for the full length to be insulated.

c. Following installation of the insulation, backfill and compact the remainder of the trench.

K. Utility Trench Patches

The Contractor shall be responsible for the temporary sidewalk, driveway aprons and bituminous pavement restoration of the streets that they disturbed. The Contractor shall place a temporary surface consisting of a minimum thickness of three (3) inches of bituminous cold or two (2) inches of bituminous hot mix, material on top of the trench the same day the trench is backfilled. The trench shall be properly prepared with completed backfill material and kept three (3) inches low to accept cold mix material and two (2) inches low to accept hot mix material. The Contractor shall be responsible for maintaining adequate drainage of surface water and shall grade to inlets and replace cold or hot mix as required. All costs incurred to comply with this section, including obtaining and placing the cold or hot mix, shall be the responsibility of the Contractor and shall be included in the price bid for other items. The Contractor shall maintain the bituminous cold or hot mix until the pavement replacement work is completed.

Cold mix bituminous material shall be plant mixed and shall meet the following criteria:

1. Asphalt shall be SC-250*, conforming to ASTM Designation D-2026. The asphalt shall have been heated to 100^0 F prior to mixing and shall be between 6 and 7 percent by weight of the total mix.

2. Mineral aggregate shall be crushed stone, crushed or uncrushed gravel, slag, sand, stone or slag screenings, mineral dust or a combination of these materials meeting the following gradation:

SIEVE SIZE	PERCENT PASSING (By weight)
½"	100
3/8"	90-100
No. 4	25-65
No. 8	5-35
No. 50	0-15
No. 200	2-10
Bitumen Content	4.8-5.4

*Other Proprietary materials may be used

The cold mix bituminous mixture, or equal, shall be approved by the Engineer prior to placement.

Temporary hot mix material shall consist of materials approved within Section 465 of the WisDOT "Standard Specifications for Highway and Structure Construction".

L. Slurry Backfill

When conventional backfill cannot be placed or compacted to the specified requirements, a 100 psi slurry shall be utilized with a bond breaker between the pipe and slurry.

When slurry backfill is utilized, as directed by the Engineer, it shall be paid for under the bid item "Slurry Backfill, CY". This bid item shall be for any additional cost above the cost to use conventional backfill. Slurry Backfill shall be measured in place and the measurement agreed upon between the Engineer and Contractor prior to slurry placement.

M. 1 ½" Or 3" Stone Cradle Including Extra Excavation

Whenever it is necessary, due to the nature of the material on the bottom of the trench, to excavate below grade, the Contractor shall remove said material to the required depth below grade and fill in with 1 ½" crushed stone or 3" breaker run, all as directed by the Engineer. Payment for the excavation below grade shall be considered incidental and included in the unit price for 1 ½" or 3" Crushed Stone Cradle Including Extra Excavation.

1 ½" or 3" Crushed Stone Cradle Including Extra Excavation shall be measured by the ton and paid for based on tickets received by the Engineer for each load of Crushed Stone Cradle. The bid price for 1 ½" or 3" Crushed Stone Cradle Including Extra Excavation shall be full compensation for furnishing, hauling, placing, and compacting the specified material, including all equipment, tools, labor and incidentals necessary to complete the work as specified, including extra excavation.

N. Sewer Stabilization

Where 1½” to 3” stone cradle is not sufficient to stabilize the base for sewer pipe and/or structure placement, the Contractor shall overexcavate the infrastructure as described below as directed by Engineer.

Contractor shall overexcavate under manholes a maximum depth of ½ the diameter of the manhole base. For every foot in depth that is overexcavated, a foot in width beyond all sides of the manhole base must be excavated. For example, a 4-foot diameter manhole with a 5-foot diameter base will be excavated to a depth of 2.5 feet. The excavation will have a minimum 10-foot radius.

¾” CABC or ¾” clear stone shall be placed in the overexcavated area, completely encased in a Type R Geotextile Fabric. Fabric shall overlap a minimum of 1 foot at joints.

Contractor shall overexcavate under sewer mains and laterals to a depth of 2.5 feet. For every foot in depth that is overexcavated, a foot in width beyond each side of the sewer pipe must be excavated. For example, an 8-inch sanitary pipe with an overexcavated depth of 2.5 feet will be excavated a minimum width of 5.7 feet.

¾” CABC or ¾” clear stone shall be placed in the overexcavation area, completely encased in Type R Geotextile Fabric. Fabric shall overlap a minimum of 1 foot at joints.

O. Concrete Blanket

Concrete blankets are to be constructed when a lateral is within 18” under an existing utility. Concrete blankets must have at least 2” of separation between the top of the encasement and the bottom of any PVC water mains.

Concrete Blanket shall be installed over existing sewer with a diameter from 4” to 24” when cover between pipes is less than 18” or when ordered by the engineer. Concrete blanket shall extend across the full width of the excavated trench. Concrete blanket shall be placed at least 24 hours before the proposed sewer is placed unless otherwise directed by the engineer. Where pipe crosses over an existing sewer, the distance above the concrete blanket and below the top pipe is to be equal to a minimum of 1/2 the outside diameter of the crossing pipe and shall be provided for bedding material where possible. Otherwise the entire top surface of the concrete blanket shall be raised to the crossing pipe (See Concrete Encasement).

P. Concrete Encasement

Concrete encasements are to be constructed when a lateral is within 18” under an existing utility. Concrete encasements must have at least 2” of separation between the top of the encasement and the bottom of any PVC water mains.

Concrete Encasements shall be installed over sewers with an outside diameter of 4” to 24” when cover between pipes is less than 18” or when ordered by the engineer. The concrete encasement shall make contact with the lower 90° of pipe perimeter of the crossing pipe. Concrete encasement shall be placed at least 24 hours before the pipe is placed unless otherwise directed by the engineer

404.4 Measurement & Payment

A. Trench Excavation

All trench excavation necessary for the construction of sanitary or storm sewer systems shall be considered incidental to the item that requires the excavation.

B. Additional Excavation, Including Undercut

Any work involved in forming a satisfactory foundation at depths of one-half (1/2) foot or less below the bottom of the pipe will be considered as incidental. Additional excavation, including undercut beyond one-half (1/2) foot, shall be measured in the field and the weight in tons shall be computed from those measurements and paid for under the unit price for 1½” or 3” crushed stone cradle when ordered by the Engineer. The maximum width of the additional excavation or undercut, shall be the outside dimension of the pipe or structure plus two (2) feet plus the amount necessary for sheeting and bracing.

If in the opinion of the Engineer, further means of support are necessary, such as piling, sheeting-in-place, or concrete, the additional excavation shall be considered incidental to and included in the unit price for pilings, sheeting, or concrete.

The contract price for 1½” or 3” crushed stone cradle shall include excavation below grade; installation and removal of sheeting and bracing; removal of water from the excavation; disposal of surplus material from the excavation; and furnishing, placing and compacting the specified material required to replace the materials excavated.

Over excavation for the Contractor’s convenience shall not be considered for additional payment.

C. Extra Excavation of Road Base

This work shall include the cost to excavate eighteen (18) inches below the top of the existing pavement, supply, place and compact crushed aggregate base course within the trench section and extra excavation areas with roller compactor, and temporary patch material when field ordered by the Engineer. This bid item is located in excavation section.

D. Bedding of Sewer Pipes

The cost of bedding, including the excavation for the bedding material, furnishing and placing the bedding material and compacted in place, shall be included in the unit price bid for sanitary and storm sewer pipe laid complete.

E. Gravel Backfill

Gravel Backfill shall be incidental to the unit price of the sewer being installed.

F. Natural Backfill

Natural Backfill for sewer shall be considered incidental to the cost of installing sewer pipe and structures.

G. Insulation

Furnish and install insulation is measured by length in feet of pipe insulated measured along the centerline of the pipe at the surface.

Furnish and install insulation is paid for at the Contract unit price per linear foot. Payment per foot shall be full compensation for all work in insulating the pipe as required.

When no bid item is provided and a sewer is shown on a plan with less than three foot of cover over the top of pipe or a deeper sewer pipe is field modified to have less than three foot of cover over the top of pipe, the Contractor shall provide and install the insulation incidental to the unit price of the sewer pipe being installed.

H. Utility Trench Patches

Utility trench patches shall be considered incidental to the cost of the sewer pipe and structures constructed.

I. Slurry Backfill

When slurry backfill is utilized, as directed by the Engineer, it shall be paid for under the bid item "Slurry Backfill, CY". This bid item shall be for any additional cost above the cost to use conventional backfill. Slurry Backfill shall be measured in place and the measurement agreed upon between the Engineer and Contractor prior to slurry placement.

J. Sewer Stabilization

Bid Item "Sewer Stabilization Aggregate" shall be paid at the unit price per ton of materials used and shall be full compensation for excavation and disposal of materials under the infrastructure, materials, installation, time to determine use, and for all labor, tools, equipment, and incidentals to complete the work. Type R Geotextile Fabric shall be considered incidental to the Sewer Stabilization Aggregate bid item.

The City will pay for the work specified at the contract unit price under the following bid item and if not specified within a Bid Proposal shall be considered incidental to other work:

ITEM #	DESCRIPTION	UNIT
404.01	1.5" Stone Cradle Sanitary Sewer	TON
404.02	3" Stone Cradle Sanitary Sewer	TON
404.03	1.5" Stone Cradle Storm Sewer	TON
404.04	3" Stone Cradle Storm Sewer	TON
404.05	Insulation	LF
404.06	Additional Embankment Fill	CY
404.07	Slurry Backfill	CY
404.08	Sewer Stabilization Aggregate	TON
404.09	Concrete Blanket	EACH
404.10	Concrete Encasement	EACH

Page Intentionally Left Blank

SECTION 405

ROCK EXCAVATION

405.1 General

Rock shall be defined to include solid ledge rock, bedded deposits and unstratified masses, and all natural conglomerate deposits so firmly cemented as to present all the characteristics of solid rock. The materials shall be so hard or so firmly cemented that in the opinion of the Engineer it is not practical to excavate and remove the material with a backhoe except after thorough and continuous drilling and blasting or using specialized rock trenching equipment. Boulder, hard heads and stones, one (1) cubic yard in volume or larger, shall be classified as rock. The Engineer shall be the sole judge as to what constitutes rock excavation.

Shales; hard pan; masonry and concrete structures or foundations; plain or bituminous bound base or surface courses; broken rock; broken concrete; stratified or deteriorated ledge rock; boulders, hard heads and stones less than one (1) cubic yard; or any material which can be excavated with a backhoe shall not be classified as rock.

Backhoes / Excavators as referred to above shall be taken to apply to a modern backhoe of not less than three-quarters (3/4) cubic yard manufacturer's rated bucket capacity, having adequate power and being in good running condition in the hands of an experienced operator.

Rock excavation shall be defined as the removal of rock, as defined above, by methods of drilling and blasting, or rock trenching/grinding. Unless otherwise specified, either rock excavation method may be employed.

Rock shall be removed to provide a clearance for all pipes and appurtenances of at least six inches below the bell of the pipe, and a minimum of twelve (12) inches on each side of the outside of the pipe, or a total of 30 inches, whichever is greater. Pipelines that will have future extension or future connections shall be trenched to the proper width and depth a distance of ten (10) feet beyond the end of the pipeline included in this project.

Rock shall be removed to provide a clearance for all structures of at least six inches below the structure and a minimum of one (1) foot on each side of the structure.

The specified minimum clearances are the minimum clear distances which will be permitted between any part of the pipe or appurtenances being laid and any part, point or projection of the rock. Crushed stone shall be used as a cushion in areas of rock excavation and shaped to conform to the lower portion of the pipe to be placed. The cost of said crushed stone shall be included in the installation of the pipe as bedding material.

Rock excavation shall be conducted to minimize damage to the existing environment, including existing pavement, landscaping, and surrounding structures.

405.2 Materials

Vacant

405.3 Construction Methods

Site Examination

The Contractor must thoroughly document the condition of any existing pavement and other features adjacent to the trench location. The Contractor must also examine exposed rock areas, quarries, excavations and other areas that would provide information on the area geology. The Contractor must evaluate the rock type density, fractures, orientation, weathering, groundwater, and other information that has an impact on the means and methods necessary to minimize damage during the grinding operation.

A. Rock Excavation by Mechanical Methods (Grinding/Trenching)

Mechanically remove rock to the line and grades shown on the Drawings.

The trenching machine shall be laser controlled for line and grade. The Contractor will be responsible for checking the grade. No additional payment will be given for trenches that are constructed to improper line and grade.

Pneumatic or cutting tools may be used at conflicts with other utilities and obstacles.

Grindings will be placed back in the trench until utility construction commences, when the utility contractor shall excavate the grindings, install the pipe and compact approved backfill material.

B. Rock Blasting

Contractor Requirements:

The Blasting Contractor shall have a minimum of ten years of experience with blasting within residential areas. As part of the bid submittals, the blasting contractor shall submit references from at least five projects which have occurred within the last five years involving blasting within residential areas and show that the Contractor has successfully completed these projects. These submittals shall include the name of the project, location, dates of blasting, name of project engineer, contact name and phone number.

All handling of explosives shall be conducted by or under the direct supervision of personnel who have completed a minimum of 40 hours of explosive handlers safety course training and who are in possession of a valid blaster's license from the Wisconsin Economic Development Corporation (WEDC).

The blasting contractor shall also submit Certificates of Insurance meeting the City of Green Bay requirements as stated within the contract special provisions.

The Contractor shall obtain the required permits and licenses from the City Fire Department at his/her own expense.

At the Preconstruction Meeting, the Blasting Contractor shall submit a blast plan to the City of Green Bay for review. This blast plan shall include:

- A copy of the Blaster's License
- Qualifications of all personnel who will be handling explosives at the site
- Type of explosives which Contractors are planning to use including explosive, primer cord, and initiation sources
- Extent of safety blast zone
- Anticipated blast patterns (i.e., diagram of blast patterns, number of holes, depth of holes, diameter of holes, amount of explosive per hole, number and types of delays and amount of explosive per delay.)
- Explosive logistics including where explosives will be stored on site, what security and safety precautions will be undertaken while explosives are stored on site, the amount of explosives to be stored on site, and method of transportation within City of Green Bay limits
- Written narrative discussing on limiting blast vibrations, and the effects of blasting on trees and/or shrubbery adjacent to the City right-of-way
- Blast procedures conforming to Wisconsin Administrative Code Department of Safety and Professional Services Chapter SPS 307, federal, and OSHA regulations
- Blasting schedule
- Calibrator records

Prior to mobilization to the site, the Contractor shall conduct a pre-blast survey of all surrounding structures. This survey shall document any cracks and/or faults within existing structures, sidewalks, and pavement areas. The survey shall also include all trees within the blast zone. This survey shall include, but not be limited to, a photo log, videotaping of areas of concern, and the placement of crack monitors on major existing cracks within structures. Crack monitors shall be installed and monitored for at least two weeks prior to the start of construction to document if any pre-existing settlement is occurring. The pre-blast survey shall be submitted to the City for review and comments prior to mobilization.

The methods of covering blasts, amounts of charges used, storage and transportation of explosives and detonators, and the general procedure for doing this work shall meet all requirements of local ordinances and other regulations and shall be subject to the approval of the Engineer.

Only electric detonators may be used in blasting. The Engineer reserves the right to approve the time that blasting will be permitted and no claim for loss or delay will be allowed on that account.

Prior to the start of blasting, the Contractor shall notify all residents in areas adjacent to the blasting as to where the blasting will occur. This notification shall include a schedule of the activities, dates when blasting will occur, information concerning warning sirens, mandatory safe distances to be maintained during blasting, and names of City and Contractor personnel to contact to discuss any concerns regarding blasting or to report possible damage. The City shall be copied on this notice.

Blasting Activities:

All blasting shall be conducted in accordance with Wisconsin Administrative Code Department of Safety and Professional Services Chapter SPS 307, Explosive Materials. The initial blasting shall occur at the point farthest away from any structure and that each succeeding blast occur at the next farthest distance. This will allow adjustments to the blast pattern should excessive noise, vibration, and/or fly rock be observed.

Blast Monitoring:

As part of the blasting activities, the Contractor shall provide seismographs to monitor blast induced noise and vibration. All seismographs used for monitoring vibrations and noise shall be in compliance with Wisconsin Administrative Code Department of Safety and Professional Services Chapter SPS 307.43, Instrumentation.

Instrumentation Specifications:

1. Seismic frequency range: 2 to 200 Hz ($\pm$3Hz)
2. Acoustic frequency range: 2 to 200 Hz ($\pm$1Hz)
3. Velocity range: 0.02 to 4.0 inches/second.
4. Sound range: 110 to 140 dB linear.
5. Transducers: Recording in three mutually perpendicular axes:
6. Recording: Provide time-history of waveform
7. Calibration: Be laboratory calibrated as often as necessary, but as least once every 12 months, according to manufacturer's recommendations. Calibrator records should be provided for review prior to the commencement of work.

Air Blast Monitoring:

During blasting, air blasts shall not exceed the maximum limits at any drilling. Limits are indicated in Table 1.

Table 1
Air Blast Limits

Lower frequency limit of measuring system in Hz	Maximum level in dB
2 Hz or lower – flat response	133 peak
6 Hz or lower – flat response	129 peak

Vibration Monitoring:

Ground vibrations shall be measured as the peak particle velocity recorded in three mutual perpendicular directions (vertical, transverse, and longitudinal). The maximum allowable peak particle velocity shall apply to each of the three measurements and the vector sum (resultant) of the three measurements. The maximum allowable peak particle velocity for ground vibrations shall not exceed those established by U.S. Bureau of Mines.

Monitoring should be conducted at any structure having scale distance factors less than those indicated in Table 2.

Table 2
Scaled-Distance Factor Limits

Distance (R) from the blasting site (feet)	Scaled-distance factor (SD to be applied without seismic monitoring)
0 to 300 ……..	50
301 to 5,000 ……...	55
5,001 and beyond ……..	65

The scaled-distance relationship is the distance from blast to a point of interest versus half the ratio of the charged weight per delay (within any 8-millisecond period.).

$$SD = \frac{R}{(W)^{1/2}}$$

SD = Scaled Distance
R = Distance from blast to point of interest (feet)
W = Charge weight per delay (pounds)

Fly Rock:

The Blasting Contractor shall prevent fly rock from being expelled during blasting. Fly rock is defined as rock propelled through the air from a blast. Blasters should take all precautions, such as limiting the size of blasts and/or the placement of blast mats to prevent damaging adjacent property and/or causing injury.

Blasting Logs:

Within 24 hours of the completion of the blasting, the Contractor shall submit a blasting log to the City. The blasting log shall include, at a minimum, the following items of information Wisconsin Administrative Code Department of Safety and Professional Services Department of Safety and Professional Services SPS 307.32:

1) Name and license number of blaster in charge of the blast
2) Blast location
3) Date and time of blast
4) Weather conditions at time of blast
5) Diagram of blast layout
6) Number of holes
7) Hole depth and diameter
8) Spacing
9) Burden
10) Maximum holes per day
11) Maximum pounds of explosives per delay
12) Depth of stemming used
13) Total pounds of explosives used
14) Distance to nearest inhabited building not owned by operator
15) Type of initiation used
16) Powder factor
17) Seismographic and air blast records shall include:
    a) Exact location of instrument and the date, time, and distance from the blast.
    b) Name of the person and firm taking the reading.
    c) Name of the person and firm analyzing the seismographic record, and
    d) The vibration and air blast levels recorded.

The Contractor shall be responsible for maintaining safety within the blast zones. Tape, signs, and other warning measures shall be installed as required to maintain safety in the blast zone. Residents, whose structures are within the blast zone, shall be notified as least 24 hours prior to blasting in order to evacuate their premises. The blaster shall also post observers, as required, to maintain a constant view of the blast zone and be in constant communication with the blaster during the final countdown to abort the blast should a person or animal enter into the blast zone.

Upon completion of blasting for the project, the Contractor shall conduct a post-blast survey of all structures to assess any damage that may have occurred. Any damage that is determined to be the result of the blasting shall be submitted to the Engineer for review and comment along with appropriate claim submittals to the blasting insurance company.

All injuries or losses to persons or property, by reason of blasting, shall be borne by the Contractor. The Contractor shall give a proper warning to all persons who may be in the vicinity of the work before the blast is set off. Any damage done by blasting shall be immediately repaired or compensated for by the Contractor. The City will cooperate with the Contractor in protecting life and property but will not assume any responsibility for the operations of the Contractor, nor will the City be responsible for any damages to persons or property as the result of the blasting operations.

Backfill with Rock Excavation

In areas of rock excavation, backfill shall be incidental to other items bid.

Rock excavation material used in place of gravel backfilling as specified under roads shall conform to the following:

Sieve Size	% Passing by Weight
3 inch	100
2 inch	95 – 100
1½ inch	90 – 100
1 inch	75 – 100
3/8 inch	40 – 75
No. 4	30 – 60
No. 10	20 – 45
No. 40	10 – 30
No. 200	3 – 10

As specified in the contract special provisions, the Contractor may be allowed to use natural backfill from non-rock areas of the Project in locations where rock excavation is performed. If the Contractor chooses to haul natural material from non-rock areas of the Project, it shall be incidental to other items bid.

Use of granular backfill in place of blasted rock shall be paid for under the appropriate bid item.

Rock Disposal

Surplus rocks shall be disposed of as specified in Section 303.

405.4 Measurement & Payment

Measurement for rock excavation will be the actual horizontal length along the centerline of the installed sewer, from centerline of manhole to centerline of manhole, with no deductions for manholes, sewer service branches and other fittings: and along the centerline of water main including hydrant leads from center of main to center of hydrant. The unit of measurement is linear feet. The Contractor shall also be compensated ten (10) feet of length at each future connection site excavated.

Soil borings or some other means will be provided to determine the extent of the rock elevations within the Contract documents.

The City will pay for the work specified at the contract unit price under the following bid item and if not specified within a Bid Proposal shall be considered incidental to other work:

ITEM #	DESCRIPTION	UNIT
405.01	Rock Blasting – Sanitary Sewer Main	LF
405.02	Rock Blasting – Sanitary Sewer Lateral	LF
405.03	Rock Blasting – Storm Sewer Main	LF
405.04	Rock Blasting – Storm Sewer Lateral	LF
405.05	Rock Blasting – Storm Sewer Lead	LF
405.06	Rock Blasting – Water Main	LF
405.07	Rock Blasting – Water Services	LF
405.08	Rock Grinding – Sanitary Sewer Main	LF
405.09	Rock Grinding – Sanitary Sewer Lateral	LF
405.10	Rock Grinding – Storm Sewer Main	LF
405.11	Rock Grinding – Storm Sewer Lateral	LF
405.12	Rock Grinding – Storm Sewer Lead	LF
405.13	Rock Grinding – Water Main	LF
405.14	Rock Grinding – Water Services	LF
405.15	Boulder Excavation	CY

SECTION 406

GROUND SUPPORT SYSTEMS

406.1 General

The Contractor shall be responsible for properly supporting all excavations with fixed support systems, sheeting or shoring, or movable systems such as trench boxes, as necessary to protect the work, existing property, utilities, pavement, etc., and to provide safe working conditions in the trench for contracted personnel.

406.2 Materials

Vacant

406.3 Construction Methods

The design of the initial support of all excavations in addition to long term support, sheeting, shoring and bracing is the sole responsibility of the Contractor and shall comply with the Wisconsin Administrative Code Department of Safety and Professional Services, Rules of the Department of Commerce, and OSHA 1926 requirements.

Ground support systems for excavations greater than eighteen (18) feet shall be designed and prepared by a professional engineer licensed in the State of Wisconsin.

Design sheeting and bracing for the sides of excavations for all underground structures, in a manner which will permit the safe and expeditious construction of the permanent structures and to minimize the movement or settlement of the ground, and prevent damage to adjacent buildings, structures, or utility facilities. The design shall take into account, as a minimum, earth and hydrostatic loads; construction loads such as jacking forces and surcharge; resistance to stresses during manufacturing, handling, and erection; necessary space required for final lining, permanent structures, and all other construction operations. The obtaining of any additional information necessary for the design shall be the responsibility of the Contractor or their Engineer. The design shall provide adequate working space for muck removal, placing concrete, reinforcing steel and other materials shown on the plans.

Design the ground support system to ensure a stable excavation bottom with respect to heave due to earth pressures, and due to ground water pressures.

Design the support system to passively ensure that no earth or other loading will be placed on the new work prior to the completion and until design strength has been reached. The Contractor shall be solely and completely responsible for any loss due to premature loading of the new work.

Removal of any sheeting or bracing from the trench shall be accomplished in such a manner as to fulfill the above requirements. Sheeting and bracing shall be removed, unless specific permission is given by the Engineer in writing to leave it in place.

Required submittals shall be included when excavations in excess of eighteen (18) feet are anticipated; when requested within Contract Documents or requested by the Engineer.

1. Submit for review detailed drawings and computations verifying the type of installation the Contractor proposes to furnish to the Engineer ten (10) days prior to the start of the work.

2. Contractor's Engineer Certification: The Contractor shall obtain from his/her engineer and submit to the City, no later than the 5th day of each month, a signed and sealed certification that the work during the previous month pertaining to the Contractor's engineer's design was put in place substantially in accordance with the design concepts prepared by him/her.

3. Submit drawings and calculations of all ground support systems for information to the Engineer. The Engineer will only peruse these documents to determine that they have been prepared by a professional engineer, and that the design is supported by a reasonable set of calculations. The Engineer will only acknowledge receipt of the documents, and will not be obligated to check design calculations or the layout design to the extent of providing an approval of the documents.

4. Submit plans for dewatering and monitoring of movement of the ground support systems.

Where support is required of ground systems, it shall be installed as soon as possible after exposing the ground by excavation, and in all cases support, shall be installed within eight (8) hours after the ground is exposed. The Contractor shall be solely and completely responsible for any loss due to premature loading of new work.

Excavation bottoms in earth shall be protected from softening or deterioration by installation of a concrete mud slab or mat or granular fill base as designed by the Contractor's engineer, and as submitted with the ground support system plans.

406.4 Measurement and Payment

The City will pay for the work specified at the contract unit price under the following bid item and if not specified within a Bid Proposal shall be considered incidental to other work:

ITEM #	DESCRIPTION	UNIT
406.01	Ground Support System	LS

SECTION 407

SURFACE AND TRENCH WATER CONTROL

407.1 General

This Section covers the work necessary to control, handle and dispose of groundwater and surface water and all other water that may be encountered, as required for performance of the Work; as well as work necessary to repair or replace property damaged due to groundwater disturbances; and work necessary to maintain water supplies to either public or private supply points.

407.2 Materials

Vacant

407.3 Construction Methods

The Contractor shall be responsible for the continuous control of water at all times during the course of construction, and shall provide adequate backup systems to accomplish control of water entering excavations, trenches, and other parts of the work and shall keep said excavations dry until the structures or utilities to be built therein are completed. No masonry or concrete shall be installed in water nor shall water be allowed to rise over masonry and/or concrete until the mortar and concrete have attained final set. In no event shall water be allowed to rise over masonry or concrete if there is danger of flotation or of setting up unequal pressures in the concrete until the concrete has set at least twenty-four (24) hours and any danger of flotation has been removed. The method of controlling, handling, and disposal of groundwater and surface water shall be by whatever means are necessary and in conformance with this Section to obtain satisfactory working conditions and to maintain the progress of the work. All required drainage, pumping, and disposal shall be done without damage to adjacent property or structures, and without interference with the operation of other Contractors, or the rights of public or private owners, or pedestrians and vehicular traffic. The Contractor shall modify the water control system at their own expense if, after installation and while in operation, it causes or threatens to cause damage to adjacent property or to existing buildings, structures, or utilities.

In addition to these Specifications, the Contractor shall comply with the City of Green Bay Erosion Control Ordinance and Wisconsin DNR Technical Standard 1061 to control, handle, and dispose of ground water and surface water.

Trench water control shall be either TYPE I or TYPE II as described below:

TYPE I – Trench dewatering and points/wells dewatering with pump rates less than 70 gallons per minute (Aggregate Total)

If the Contractor chooses to use trench dewatering techniques (no limit on pump rates) or a point/well system that in total pumps less than seventy (70) gallons per minute (GPM), they shall comply with Wisconsin Department of Natural Resources (WDNR) Best Management Practices for erosion and sediment control and the City of Green Bay's Erosion Control Ordinance.

TYPE II – Points/Wells with pump rates greater than or equal to 70 gallons per minute (Aggregate Total)

If the Contractor chooses to dewater the site with points/well with total pump rates equal to or greater than seventy (70) GPM, or one-hundred thousand (100,000) gallons per day, the Contractor shall obtain a permit for installation of groundwater control well(s) from the WDNR in accordance with paragraph 144.025(2)(e), Wisconsin Statutes. All wells shall be drilled and sealed in accordance with the requirements of the WDNR for installing and abandoning wells.

A. Permits

Obtain a permit from the Wisconsin Department of Natural Resources (WDNR).

Wisconsin Department of Natural Resources
Private Water Supply Section
PO Box 7921
Madison, WI, 53707-7921

Where the discharge (as permitted by the private water supply permit) has the potential to cause an adverse impact on the quality of the receiving waters, a Wisconsin Pollutant Discharge Elimination System (WPDES) permit may be required by the WDNR. If a WPDES permit is required the Contractor shall file for this permit with the WDNR, and comply with any and all requirements of that permit.

The Contractor shall obtain a Pit / Trench Dewatering Permit for any direct or indirect discharge to waterways from the WDNR.

Wisconsin Department of Natural Resources
Northeast Region
2984 Shawano Avenue
PO Box 10448
Green Bay, WI 54307-0448.

If discharge testing is required by the WPDES permit the Contractor shall:

Arrange for independent testing laboratory to sample and analyze discharge water for particulates at frequency indicated within the WPDES permit. Where particulates exceed specified limits, the Contractor shall take such measures as are required to improve water quality to meet standards.

Construct any sedimentation basins used to meet the requirements of the WPDES discharge permit.

Permits shall be obtained prior to installation of wells. The Contractor shall provide copies of WDNR permits to the Engineer.

B. Submittals

Required submittals to the City shall include the following:

1. Working drawings and descriptions of proposed groundwater and surface water control facilities including but not limited to:

    a. Methods, equipment, and power supply;

    b. Pollution control facilities and discharge locations to be utilized;

    c. Means of monitoring groundwater levels and drawdown;

    d. Construction details of dewatering wells; erosion control; sedimentation basins

2. Schedule of installation and operation;

3. Copies of permits, as specified.

The submittal shall be made ten (10) days prior to construction and the installation of water control systems. The Contractor shall resubmit as appropriate if the system is modified during installation or operation.

C. Additional Requirements

The Contractor shall protect all local water supplies from harm as a result of dewatering operations, and provide remedial measures for any situations where such harm occurs.

Any structure, including but not limited to buildings, bridges, streets, and utilities that become unstable or vulnerable to settlement due to removal or disturbance of groundwater shall be supported immediately by the Contractor. Support shall include but not be limited to bracing, underpinning, or compaction grouting.

All loss or damage arising from removal or disturbance of groundwater, including but not limited to claims for subsidence and the loss of structure support, that may occur in the prosecution of the work shall be sustained and borne by the Contractor. If the Contractor fails to correct the damage resulting from their operations, the City may, thirty (30) days after notifying the Contractor in writing, proceed to repair, rebuild or otherwise restore such damaged property as may be deemed necessary, and the cost thereof, shall be deducted from any compensation which may be or become due the Contractor under this Contract.

Surface drainage must be intercepted and diverted away from the work sites by the use of dikes, curb walls, ditches, sumps, or other means. Surface drainage systems shall be designed so that they do not cause erosion on or off the site. Surface runoff shall be controlled to prevent entry of water into excavations. Remove drainage systems when they are no longer needed.

Use water control methods which are appropriate to the ground conditions, the construction operations, and the requirements of these Contract Documents. The methods will involve removal of water within the excavation and may involve removal of water outside the excavation or construction of facilities to control water movement into the excavation. Water control measures shall minimize adverse effects of elevated or reduced water pressure on the Work, the surrounding ground and adjacent facilities and structures. Design and operate the water control measures so as to prevent removal of in-situ materials, or loosening or softening of in-situ materials within the excavation.

Control groundwater and surface water such that open cut pipelines and other structures will be constructed without adverse effects of water, and to prevent hydrostatic uplift pressures until construction has been completed. Water shall be controlled during periods when concrete (except tremie concrete) is being placed, when pipe is being laid, and at such other times as is necessary for efficient and safe execution of the work. Where groundwater is being removed from the ground, the Contractor shall install piezometers and monitor groundwater levels as necessary to evaluate the effect of dewatering on structures. Any piezometers installed by the Contractor shall be abandoned by the Contractor in conformance with applicable regulations for well abandonment prior to completion of work on this Contract.

If the Contractor encounters large amounts of water entering the excavation, immediate steps shall be taken to control the water inflow. A large amount of inflow requiring immediate control shall be defined as that which adversely affects the performance of the Work or that has the potential of causing loss or damage to adjacent property or structures.

Construct, operate, and close wells in accordance with DNR requirements. Dewatering wells shall be constructed and operated so as to prevent removal of fines.

All water removed from the construction site shall be discharged through pipes or hoses. The conveying of water in open ditches or trenches will not be allowed. Water shall be discharged in a manner that will not cause soil erosion at the discharge point. Discharge shall not cause siltation or flooding in any stream, storm sewer, or on adjacent properties.

DNR treatment requirements for discharge to a surface water are a daily maximum of forty (40) mg/1 for total suspended solids and fifteen (15) mg/1 for oil and grease content.

Treatment systems shall be designed to handle dewatering discharge and surface water runoff and for the maximum discharge anticipated from information provided in the Geotechnical Report. For storm water that falls within the area of the treatment disposal system, the system shall provide additional treatment for a ten (10) year twenty-four (24) hour rainfall event. Treatment systems shall be capable of expansion if greater capacity becomes necessary during the course of the work. Copies of all records required by the DNR shall be provided to the Engineer.

Permission to use storm sewers or drains for water disposal purposes shall be obtained from the City. At no times shall a sanitary sewer be used for disposing of oil and water or surface water. The Contractor may not cause flooding by overloading or blocking the flow in the drainage

facilities. The facilities must be restored and cleaned as originally found, and must be left unrestricted. Any damage to facilities as a result of the Contractor's operations shall be repaired or restored as directed by the Engineer, at the Contractor's expense.

The dewatering system must remain in place until all excavation, backfilling and compaction is completed, the dewatering system must then be removed and abandoned according to the WDNR requirements.

407.4 Measurement and Payment

The City will pay for the work specified at the contract unit price under the following bid item and if not specified within a Bid Proposal shall be considered incidental to other work:

ITEM #	DESCRIPTION	UNIT
407.01	TYPE I Dewatering	LS
407.02	TYPE II Dewatering	LS
407.03	Dewatering	LS

Page Intentionally Left Blank

SECTION 410

TUNNELING

410.1 General

The tunnel shall be excavated to true line and grade and to such size and shapes as will allow the placing of the full section of the sewer as shown in the Contract Documents after all lining is in place. The Contractor shall use extreme care in excavating and trimming to insure that the full section will be placed without deviating from the correct lines and grades of the finished structure.

410.2 Materials

The Contractor shall submit detailed drawings, specifications, and the computations verifying the type of installation to be furnished to the Engineer for record purposes.

The backfilling of the tunnel shall be made by thoroughly compacted concrete when so specified and, when not otherwise specified, by pumping or forcing in a lean slurry mixture composed of:

1 part cement,
1 part fly ash
8 parts of fine clean sand

The composition of the sand shall be:

100% passing the No. 10 screen
< 5% passing the No. 200 screen

If the volume to be filled is large, the slurry mixture shall be:

1 part fly ash
1 part cement
4 parts sand
4 parts stone

410.3 Construction Methods

The material shall be forced in at one end until it passes through the tunnel, surrounding the pipe, to the opposite end. In special cases, the slurry may be pumped in from the top at the center of the tunnel until it emerges at both ends.

The pipeline shall be properly bedded and joints made according to the specifications for an open cut, except when a concrete encasement is required. Concrete for encasement shall be a WisDOT Class A, Portland Cement Concrete.

The Contractor shall be responsible for damages resulting from ground losses in the tunnel and for refilling of the voids. The Contractor shall be solely responsible for such damage where such ground losses are so severe that they amount to a practical collapse of the tunnel, resulting in

damage to underground or surface structures or any improvements thereon,. When the refilling of such collapsed portions of the tunnel cannot be effectively carried out from below, the Engineer reserves the right to order the Contractor, at no additional expense to the City, to make an opening from the surface for the purpose of backfilling. In the case a portion of the proposed tunnel shall require reinforcing because of added loading, imposed by such collapse, the Engineer reserves the right to order the Contractor to furnish and place such reinforcement at no additional cost to the City.

Rat holing style of tunneling shall not be permitted under existing curb and gutter, paved roadways, sidewalks, or driveways without the written permission from the Engineer. Rat holing style of tunneling shall be allowed on a case by case basis for small diameter water services where a pilot hole of similar diameters is punched beneath the existing curb and gutter without undermining any portion of the curb and gutter. If any portion of the curb and gutter is undermined, the curb and gutter shall be saw cut, removed, and replaced at no cost to the City. The remaining construction shall be completed by open trench means and methods.

410.3 Measurement and Payment

Where tunneling is required, or, because of the circumstances involved, the Contractor prefers that type of construction after prior approval of the Engineer, the cost of the sheathing shall be part of the bid price and shall not be construed, nor paid for, as an extra.

The measurement and payment for large tunneling operations shall be in accordance with the Special Provisions provided in the contract documents. All other tunneling operations not specified within the Special Provisions shall be considered incidental to the installation of the sewer or water pipe.

The City will pay for the work specified at the contract unit price under the following bid item and if not specified within a Bid Proposal shall be considered incidental to other work:

ITEM #	DESCRIPTION	UNIT
410.01	Tunneling - 8"	LF
410.02	Tunneling - 10"	LF
410.03	Tunneling - 12"	LF
410.04	Tunneling - 15"	LF
410.05	Tunneling - 18"	LF
410.06	Tunneling - 21"	LF
410.07	Tunneling - 24"	LF
410.08	Tunneling - 27"	LF
410.09	Tunneling - 30"	LF
410.10	Tunneling - 36"	LF
410.11	Tunneling - 42"	LF
410.12	Tunneling - 48"	LF
410.13	Tunneling - 56"	LF
410.14	Tunneling - 60"	LF
410.15	Tunneling - 66"	LF
410.16	Tunneling - 72"	LF

SECTION 411

BORE AND JACK

411.1 General

Bore and Jack method is defined as a horizontal auger boring that installs a carrier pipe with or without a casing pipe as specified in the Contract Documents. While boring and jacking a pipe through an embankment or under a street or railroad, all operations shall be made under close supervision of the Engineer.

411.2 Materials

A casing pipe is a pipe into which another pipe conveying the flow is inserted. Final alignment of the casing pipe shall be within three (3) inches of line and grade, or as specified in the Contract Documents. The casing pipe shall be as follows:

1. Steel pipe shall meet the requirements set forth in table 1 *Steel Casing Pipe Requirements*. The joints of sections of casing pipe to be installed shall be welded with a continuous circumferential weld. It shall be the Contractor's responsibility to provide stress transfer across the joints which is capable of resisting the installation forces involved.

Table 1: Steel Casing Pipe Requirements

Steel Casing Pipe ASTM A-53 Grade B 35,000 PSI Min. Yield		
Size of Carrier Pipe	Casing Min. Wall Thickness	Casing Min. Diameter
6"	0.312	18"
8"	0.312	18"
12"	0.406	24"
24"	0.563	42"

2. The casing diameter should be sized to provide a minimum of 4 inches between the inside of the casing pipe and the largest outside diameter of the carrier pipe (including pipe bells) to allow for deflection of the casing pipe and installation of casing spacers.

3. When reinforced concrete pipe is used as the casing pipe the barrel and joints of all pipe installed by trenchless methods shall be protected from crushing or other damage by placing "Celotex", plywood, or other approved cushioning material at the appropriate location in accordance with manufacturer's recommendations for each section of pipe prior to installation out of the shaft. The cushioning material shall be secured in position with a mastic material or other approved means. Installation pressures used shall be such that crushing or other damage to the barrel or joints of the pipe will not occur.

   After the pipe is in final position, the inside joint shall be pointed with a non-shrink cement mortar. Pointing is not required when rubber type gasket joints are used.

The carrier pipe installed shall have joints conforming to the requirements of the specified pipe. The pipe shall be supported and braced to prevent shifting or floatation during the backfilling operation. The annular space between a gravity flow system pipe and the casing pipe shall be completely filled by a slurry-like mixture composed of:

1 part cement
1 part fly ash
8 parts fine clean sand

The composition of the sand shall be such that:

100% passing the No. 10 screen
<5% passing the No. 200 screen.

The slurry like material shall be placed by forcing in under pressure. The grouting operations shall be continued until the Engineer is satisfied that all voids and interstices have been completely filled. After placing the grout mixture, the interior of the pipe shall be inspected and cleaned to remove any mixture which may have entered the interior of the pipe line.

Unless otherwise required, all pipe installed in casing pipe shall have a flexible joint located not more than two (2) feet outside the ends of the casing pipe. When called for in the Contract Documents, the Contractor shall place a twelve (12) inch concrete or brick and mortar bulkhead at each end of the casing pipe after pipe installation in conjunction with the backfilling.

411.3 Construction Methods

Where ground conditions are suitable, bore and Jack may be used to install underground utilities when so indicated on the plans or with written permission of the Engineer. The diameter of the bored hole shall be larger than the outside diameter of the widest point on the pipe to be installed. Alignment of the completed bore shall be within six (6) inches of line and grade for force mains. Gravity flow systems will be installed to the horizontal alignment and vertical elevations specified in the Contract Documents. Bore and jacking misalignment greater than tolerance shall be corrected at the Contractor's expense and as approved by the Engineer.

The hydraulic jack shall be of suitable capacity to properly move the pipe. Suitable tracks or skids shall be installed to properly align the pipe in such a manner that the required line and grade can be maintained. Care should be taken not to remove more of the dirt surrounding the pipe than is absolutely necessary.

Unless otherwise specified, boring without a casing pipe shall be limited to a maximum sixteen (16) feet in length with no joint permitted within the bore.

Ductile iron pipe installed in bored or cased holes shall be provided with a minimum of two separate wraps of polyethylene. Care shall be exercised that mud or dissimilar materials that would cause corrosion of the pipe shall not come in contact with the pipe.

411.4 Measurement and Payment

Measurement for bore and jack will be the actual horizontal length along the centerline of the casing pipe installed for sewer or water main.

Bore and Jack will be paid for at the contract unit price per linear foot of casing pipe and carrier pipe installed and shall be full compensation for the casing pipe, carrier pipe, filling of annular space, excavation and stabilization of bore pits, dewatering, setting up and removal of the boring and jacking machine, and for all labor, tools, equipment and incidentals necessary to complete the work.

ITEM #	DESCRIPTION	UNIT
411.01	Bore & Jack - 8" Sanitary Sewer	LF
411.02	Bore & Jack - 12" Sanitary Sewer	LF
411.03	Bore & Jack - 15" Sanitary Sewer	LF
411.04	Bore & Jack - 18" Sanitary Sewer	LF
411.05	Bore & Jack - 21" Sanitary Sewer	LF
411.06	Bore & Jack - 24" Sanitary Sewer	LF
411.07	Bore & Jack - 27" Sanitary Sewer	LF
411.08	Bore & Jack - 30" Sanitary Sewer	LF
411.09	Bore & Jack - 36" Sanitary Sewer	LF
411.10	Bore & Jack - 12" Storm Sewer	LF
411.11	Bore & Jack - 15" Storm Sewer	LF
411.12	Bore & Jack - 18" Storm Sewer	LF
411.13	Bore & Jack - 21" Storm Sewer	LF
411.14	Bore & Jack - 24" Storm Sewer	LF
411.15	Bore & Jack - 27" Storm Sewer	LF
411.16	Bore & Jack - 30" Storm Sewer	LF
411.17	Bore & Jack - 36" Storm Sewer	LF
411.18	Bore & Jack - 42" Storm Sewer	LF
411.19	Bore & Jack - 48" Storm Sewer	LF

Page Intentionally Left Blank

SECTION 412

HORIZONTAL DIRECTIONAL DRILLING

412.1 General

This specification covers the installation of pipe by Horizontal Directional Drilling (HDD). HDD is a trenchless excavation method, which is accomplished in three phases. The first phase consists of drilling a small diameter pilot hole along a designed directional path. The second phase consists of enlarging the pilot hole to a diameter suitable for installation of the pipe. The third phase consists of pulling the pipe into the enlarged hole. HDD is accomplished using a specialized horizontal drilling rig with ancillary tools and equipment. The Contractor shall select the equipment necessary to complete the excavation through the anticipated subsurface conditions and install the pipe.

412.2 Materials

The pipe shall be High Density Polyethylene pipe meeting the following requirements:

1. Conform with AWWA C906.

2. Standard PE code designation PE 3408.

3. Pressure class: 160.

4. Dimension ratio: DR 11.

5. Joining PE pipe to PE pipe: Thermal butt fusion.

6. Joining to fittings: mechanical joint with a stainless steel pipe stiffener and joint restraint.

7. Mechanical fittings used with polyethylene pipe shall be intended for this purpose and used as recommended by the manufacturer.

412.3 Construction Methods

A. Qualifications

The HDD Contractor's Operator shall have successfully completed a minimum of six (6) directionally HDD Installations for pipe sizes ranging from four (4) inches to twenty-four (24) inches in diameter under similar conditions and lengths. The Engineer can request documentation to the Operators experience at any time. If in the opinion of the Engineer, the Operator is not qualified, the Contractor shall replace them with a more experienced operator.

The Contractor shall have the ability to remotely steer and electronically monitor the location and depth of the cutting bit. The use of mechanical, pneumatic or water-jetting methods will not be acceptable.

B. Submittals

The Contractor shall submit the following information to the Engineer:

1. A detailed work schedule.

2. Working plans showing the general arrangement of the Contractor's work areas, storage areas, and lay down areas showing locations of drill entry and exit work shafts, slurry work shafts and plants, drilling equipment, and pollution prevention measures among other features. The working plans shall show the layout profile and supports for any work shafts, trenches, or other excavations required to drill and install the pipe.

3. Composition and plan for safe disposal of drilling fluids and additives.

4. Method for maintaining borehole stability and for controlling seepage and lost ground at the borehole junctures with work shaft walls.

5. A contingency plan detailing the Contractor's proposed response to obstructions encountered along the hole alignment, unanticipated conditions, changes, and other problems arising due to the selected construction procedures or other conditions to ensure completion of the project accordingly.

6. Record Information of the pilot hole drilling.

C. Execution

Obstructions

If an unknown obstruction is encountered, the Contractor shall promptly implement measures to adjust the borehole alignment as necessary to bypass/avoid the obstruction. Adjustments to the borehole alignment to bypass the obstruction shall be gradual and shall not impose abrupt changes in the alignment that will impose additional stresses and deformations on the pipe.

Instrumentation

The Contractor shall provide and maintain instrumentation or other controls which will accurately locate the pilot hole, measure drill string axial and torsional loads, and measure drilling fluid discharge rate and pressure. The Engineer shall be allowed to have access to these instruments and their readings at all times. Record the location of the pilot bore as specified under the Subsection, Record Information. In addition, a log of all recorded readings shall be maintained and submitted as part of the Record Information.

Requirements

Unless specified in the Special Provisions, the pilot hole alignment path shall meet the following tolerances with respect to the alignment shown on the Plans:

1. One (1) foot left or right of design horizontal alignment centerline.

2. Minimum radius greater than or equal to pipe manufacturer's recommendations.

3. Elevation HDD accuracy shall be within ±two (2) inches.

However, in all cases, right-of-way restrictions shall take precedence over the listed tolerances. Regardless of the tolerance achieved, no pilot hole will be accepted if it will result in any or all of the pipeline being installed in violation of right-of-way restrictions. Additionally, concern for adjacent utilities and /or structures shall take precedence over the listed tolerances. Listing of tolerances does not relieve the Contractor from responsibility for safe operations or damage to adjacent utilities and structures. The Engineer shall be made aware of any changes to the horizontal and vertical alignments The Engineer will approve of any changes to the horizontal or vertical alignment prior to the enlarging of the pilot hole.

The Contractor may propose alternative alignments and tolerances to accommodate the Contractor's equipment. All such alternatives must be submitted to the Engineer for review and approval.

Curve Radius

Curves shall be drilled at a radius equal to or greater than that listed in the specific pipe manufacturer's published data. The drilled radius will be calculated over any three joint segment using the following formula:

$R_{drilled} = (L_{drilled}/A_{avg})*57.32$

Where:

$R_{drilled}$ = drilled radius over $L_{drilled}$

$L_{drilled}$ = length drilled, no less than 75 feet and no greater than 100 feet

A_{avg} = total change in angle over $L_{drilled}$

Record Information

Following the completion of the pilot hole drilling, the Contractor shall provide tabulation of three dimensional coordinates referenced to the drilled entry point which accurately describe the location of the pilot hole at intervals of 25 feet along the length of the pilot hole alignment.

Borehole Abandonment

Boreholes, installed and/or partially installed pipe that fails to meet the requirements of these specifications shall be abandoned and backfilled with grout as specified herein. Rejection

criteria includes failure to drill the borehole to within the required tolerances, failure to maintain the borehole open for insertion of the pipe, and failure to install the pipe properly without damage, collapse or parting the joints.

Abandoned boreholes and pipe shall be completely grouted with a sand-cement grout mix conforming to the following requirements and approved by the Engineer:

Grout shall consist of a mixture of water and Portland Cement, with mineral fillers or admixtures as necessary to achieve a non-shrink, non-bleed, flowable grout. The grout shall have a minimum twenty-eight (28) day compressive strength of five-thousand (5,000) pounds per square foot.

Sand for grout shall be clean natural silica sand, graded such that one-hundred (100) percent of the material passes the No. 20 sieve and not more than twenty (20) percent passes the No. 200 sieve.

Grout shall be injected into the borehole through the drill rods or pipes extending to the end to the borehole or pipe. Grout shall be injected at a pressure sufficient to overcome the hydrostatic pressure of the drilling fluid, but not high enough to cause heave or damage to the overlying or adjacent structures. Grout shall be injected until the borehole or pipe is flushed of all drilling fluid and the return flow at the collar of the boring of pipe shows undiluted grout. The boring or pipe shall then be plugged to maintain the grout in the boring or casing until the grout has set. Additional grout shall be injected as necessary to fill any voids left as a result of shrinkage or bleeding of the grout.

Upon completion of the boring and pipe installation, the Contractor shall remove all spoils from the boring pits and restore the pits and all areas disturbed by the boring operation to their original condition.

Ream & Pull Back

Pre-reaming operations shall be conducted at the discretion of the Contractor. The Contractor shall insure that a hole sufficient to accommodate the pull section has been produced. Any damage to the pipe resulting from inadequate pre-reaming shall be the responsibility of the Contractor. All provisions of this Specification relating to simultaneous reaming and pulling back operations shall also pertain to pre-reaming operations.

The pull section shall be installed in the reamed hole in such a manner that external pressures are minimized and an appropriate counter-balancing internal pressure is maintained. Any damage to the pipe resulting from external pressure during installation shall be the responsibility of the Contractor.

Buoyancy modification shall be used at the discretion of the Contractor. Any buoyancy modification procedure proposed for use shall be submitted for approval. The Contractor shall be responsible for any damage to the pull section resulting from buoyancy modification.

Drilling Fluids

Composition: Drilling fluids shall be non-hazardous materials which comply with State and Federal regulations and permit requirements, a liquid clay/bentonite slurry is preferred. The liquid clay shall maintain boring stability and provide lubrication while the pipe is being installed. Liquid clay must be totally inert and contain no environmental risk. The reamer shall be capable of discharging liquid clay to facilitate the installation of the pipe into a stabilized and lubricated boring.

Water: The Contractor shall be responsible for obtaining, transporting, and storing any water required for drilling fluids.

Recirculation: The recirculation of drilling fluid surface returns shall be maximized. The Contractor shall provide solids control land fluid cleaning equipment of a configuration and capacity that can process surface returns and produce drilling fluid suitable for reuse.

Disposal: Disposal of drilling fluids and drill cuttings shall be the responsibility of the Contractor. Excess drilling fluids and drill cuttings shall be disposed of in approved off-site locations in accordance with local, State and Federal laws and regulations, right-of-way and workspace agreements, and permit requirements. No additives which would prevent off-site/non-hazardous disposal of drilling mud will be allowed.

Inadvertent Returns: The Contractor shall employ their best efforts to maintain full annular circulation of drilling fluids. Drilling fluid returns at locations other than the entry and exit points shall be minimized. In the event that annular circulation is lost, the Contractor shall take steps to restore circulation. If inadvertent surface returns of drilling fluids occur, they shall be immediately contained with hand placed barriers (i.e. hay bales, sand bags, silt fence, etc.) and collected using pumps if practical. If the amount of the surface return is not great enough to allow practical collection, the affected area shall be diluted with fresh water and the fluid will be allowed to dry and dissipate naturally. If the amount of the surface return exceeds that which can be contained with hand placed barriers, small collection sumps (less than five (5) cubic yards) may be used. If the amount of the surface return exceed that which can be contained and collected using small sumps, drilling operations shall be suspended until surface return volumes can be brought under control.

Leak and Blow Out: The Contractor shall take all necessary steps to avoid any drilling fluid-induced blow out or any drilling fluid leaks. Any damage resulting from such blow-outs and leaks shall be the Contractor's responsibility.

Installation

Install the pipe such that each pipe shall have a firm bearing along its entire length.

At all times when pipe installation is not in progress, the open ends of the pipe shall be closed with temporary watertight plugs or by other suitable means. If water accumulates in the entry and exit work shafts during stoppages, the plug shall not be removed until all conditions are suitable to prevent water, earth, slurry, or other material from entering the pipe.

At all times, including when pipe installation is not in progress, the drilling slurry for support of the pipe excavation and hole must be maintained in a condition that provides borehole stability.

If unstable ground sections or pervious zones are encountered in the ground, the Contractor shall implement appropriate measures, such as installation of temporary casings, grouting or other adjustments, to avoid borehole collapse.

Pipe Pulling

Pulling Loads: The maximum lengths of continuous HDPE pipe assembled above ground and pulled at any one time shall not exceed the length recommended by the pipe manufacturer. The maximum allowable tensile load imposed on the pull section shall be equal to ninety (90) percent of the specified minimum yield strength corresponding to the area of the pipe section. If more than one value is involved for a given pull section, the lesser shall govern.

The Contractor shall provide a suitable pulling force measuring device connected to the drill string or pulling mechanism.

Torsional Stress: A swivel shall be used to connect the pull section to the reaming assembly to minimize torsional stress imposed on the pipe section.

Pull Section Support: The pull section shall be supported as it proceeds during pullback so that it moves freely and the pipe and corrosion coatings are not damaged.

Pipe tie-ins shall not be made for a minimum of twenty-four (24) hours after the pull to allow pipe to recover from the pulling stress.

Tests

The Contractor shall perform a pressure test and a deflection test on the installed pipe in accordance with Section 402 of these General Specifications.

Clean up

Upon completion of the boring and pipe installation, the Contractor shall remove all spoils from the boring pits and restore the pits and all areas disturbed by the boring operation to their original condition.

412.4 Measurement and Payment

Measurement for directional boring of a pipeline shall be made along the center of the pipeline after the boring is completed and the pipe is cut to its finished length. No allowances will be made for additional pipe needed to perform the boring operation.

Directional Boring will be paid for at the contract unit price per linear foot and shall be full compensation for the boring pits, drilling fluid and pulling lubricant, removal and disposal of drilling spoils, backfilling and compacting boring pits, restoring and landscaping all areas disturbed by the boring operation if not called out for in a separate bid item, abandonment of pipe not able to be recovered, the carrier pipe, setting up and removal of the boring machine, and for all labor, tools, equipment and incidentals necessary to complete the work.

The City will pay for measured quantities at the contract unit price under the following bid item:

ITEM #	DESCRIPTION	UNIT
412.01	Directional Bore - 8" Sanitary Sewer	LF
412.02	Directional Bore - 10" Sanitary Sewer	LF
412.03	Directional Bore - 12" Sanitary Sewer	LF
412.04	Directional Bore - 14" Sanitary Sewer	LF
412.05	Directional Bore - 16" Sanitary Sewer	LF
412.06	Directional Bore - 18" Sanitary Sewer	LF
412.07	Directional Bore - 20" Sanitary Sewer	LF
412.08	Directional Bore - 22" Sanitary Sewer	LF
412.09	Directional Bore - 24" Sanitary Sewer	LF
412.10	Directional Bore - 26" Sanitary Sewer	LF
412.11	Directional Bore - 28" Sanitary Sewer	LF
412.12	Directional Bore - 30" Sanitary Sewer	LF
412.13	Directional Bore - 32" Sanitary Sewer	LF
412.14	Directional Bore - 34" Sanitary Sewer	LF
412.15	Directional Bore - 36" Sanitary Sewer	LF
412.16	Directional Bore - 8" Storm Sewer	LF
412.17	Directional Bore - 10" Storm Sewer	LF
412.18	Directional Bore - 12" Storm Sewer	LF
412.19	Directional Bore - 14" Storm Sewer	LF
412.20	Directional Bore - 16" Storm Sewer	LF
412.21	Directional Bore - 18" Storm Sewer	LF
412.22	Directional Bore - 20" Storm Sewer	LF
412.23	Directional Bore - 22" Storm Sewer	LF
412.24	Directional Bore - 24" Storm Sewer	LF
412.25	Directional Bore - 26" Storm Sewer	LF
412.26	Directional Bore - 28" Storm Sewer	LF
412.27	Directional Bore - 30" Storm Sewer	LF
412.28	Directional Bore - 32" Storm Sewer	LF
412.29	Directional Bore - 34" Storm Sewer	LF
412.30	Directional Bore - 36" Storm Sewer	LF
412.31	Directional Bore - 42" Storm Sewer	LF
412.32	Directional Bore - 48" Storm Sewer	LF

Page Intentionally Left Blank

SECTION 413

SEWER PIPE MATERIALS

413.1 Description

Unless otherwise shown on the plans or specified in the contract, the materials furnished and installed in the work shall conform to the requirements specified herein for the type and class of material named.

Unless otherwise directed by the Engineer, all pipe and accessories shall be unloaded at the point of delivery, and hauled to and distributed at the site of the work by the Contractor. The materials shall at all times be handled with care to avoid damage. The material shall not be dropped or bumped against the ground, other pipe and accessories already on the ground, or any other object on the ground.

The Contractor shall furnish random lengths of pipe for each contract as may be required for the proper placement of fittings or structures. The costs of random lengths of pipe shall be included in the contract unit prices for the respective sizes and types of pipe.

Unless otherwise specified, references to various standard specifications and test methods shall be understood to mean the specification or test method which is current on the date of advertisement for bids.

413.2 Requirements for all Pipes

Inspection: Each length of pipe shall be subject to inspection at the factory, point of delivery and site of work. Samples of these pipes may be selected at random and shall be delivered to the testing laboratory approved by the Engineer at no cost to the City.

Straightness: Pipe intended to be straight shall have a maximum ordinate as measured from the concave side of the pipe not to exceed 1/8 inch per foot of length.

Marking: Each length of pipe shall bear the name or trademark of the manufacturer, the location of the plant and the date of manufacture. Each length shall likewise be marked to designate the class, wall thickness designation, or strength of the pipe. The markings shall be made on the exterior or interior of the pipe barrel near the bell or groove end and shall be plainly visible. Pipe with either elliptical reinforcing, or of special design with a double lap of steal at inside faces of the top and bottom of the pipe shall have the word “top” or “bottom” clearly stenciled on the inside of the pipe at the correct place to indicate the proper position when laid.

Fittings: Fittings such as wyes, tees and bends shall be made in such a manner as will provide strength and water tightness at least equal to the class of the adjacent main line pipe to which they are jointed and shall conform to all other requirements specified for pipe and corresponding class and internal diameter. Joints shall be the same type as used on the adjoining pipe.

Fabricated branches for wyes and tees shall be securely attached to the wall of the pipe in a watertight manner and shall be flush with the inside surface of the pipe. Tee branches shall have their axis perpendicular to the longitudinal axis of the pipe. Wye branches shall have their axis approximately 60 degrees for clay pipe and 45 degrees for concrete pipe, from the longitudinal axis of the pipe, measured from the bell end. Pipe reinforcement shall not be interrupted beyond a radial distance of three inches outside of the fitting.

Acceptance of fittings, stubs, miters, cutoffs or other specially fabricated pipe sections shall be based on visual inspection at the job site.

Handling Holes: Pipe handling holes are permitted only on reinforced concrete storm sewer pipe twenty-one (21) inches or larger in diameter. One handling hole is permitted on straight lengths of pipe, less than forty-eight (48) inches in diameter, and two on pipe forty-eight (48) inches and larger in diameter. After the pipe has been laid, the handling holes shall be promptly plugged with mortar and an approved manufactured plug. The Engineer reserves the right to prohibit handling holes where and when it's deemed undesirable.

Rejection: Pipe shall be subject to rejection for failure to conform to any requirements of the specifications or for any of the following reasons:

1. Fractures or cracks passing through the pipe wall or socket, except that a single crack not exceeding two (2) inches in length at either end or the pipe or a single fracture in the socket not exceeding three (3) inches in width nor two (2) inches in length shall not be considered cause for rejection unless these defects exist in more than five (5%) percent of the entire shipment or delivery.

2. Chips or fractures on the interior of the pipe exceeding two (2) inches in length, one (1) inch in width and of a depth more than ¼ the barrel thickness.

3. Cracks, sufficient to impair the strength, durability, or serviceability of the pipe.

4. Defects that indicate improper proportioning, mixing and molding, or manufacturing.

5. Variations of more than 1/8 inch per linear foot in alignment of a pipe intended to be straight.

6. Pipes being out of roundness.

7. Insecure attachment of spurs.

8. Damaged ends, where such damage would prevent making a satisfactory joint.

9. Extensive patching or painting of any surface of pipe with the exception of concrete miter pipe and concrete fittings that are formed by the removal of wedge shaped sections from the middle of the pipe.

Pipe which has been rejected by the Engineer, shall be removed from the work site by the Contractor and replaced with pipe which meets the requirements, without cost to the City.

413.3 Solid-Wall Poly-Vinyl Chloride (PVC) Sewer Pipe and Fittings

Solid-Wall Poly-Vinyl Chloride (PVC) sewer pipe and fittings, labeled as "PVC" on the plans, shall conform to the requirements of the Specification for Type PSM Poly-Vinyl Chloride (PVC) Sewer Pipe and Fittings, ASTM D-3033, ASTM D-3034, SDR-35 or SD-26 and ASTM F-679.

PVC pipe will be allowed to be used up to twenty-four (24) inch diameters unless specified differently in Contract Documents.

Fittings such as saddles, elbows, tees, wyes and others shall be of material and construction corresponding to, and have a joint design compatible with the adjacent pipe. Approved adapters shall be provided for transitions to other types of pipe. All fittings shall be molded by a qualified manufacturer.

Pipe joints shall be either solvent cement or rubber gaskets joints. Solvent cement or rubber gasket joints may be used individually but not in combination with each other on the same joint. This shall include caps for bulk heading of mainline sewers and connections. These joints shall meet the following requirement:

Rubber Gaskets: This shall be a bell and spigot joint, sealed by a rubber gasket so that the assembly will remain watertight under all conditions of service, including the movements resulting from the expansion, contraction, settlement and deformation of the pipe.

Solvent Cement: This joint shall be assembled using a solvent cement obtained from the pipe manufacturer, which conforms to the requirements of ASTM D-2564.

The assembled joint shall pass the performance tests as required in ASTM D-3212.

PVC pipes and fittings may be used for storm under drains and shall conform to the requirements of ASTM D-3034. The wall thickness shall be SDR 35 and the pipe shall be perforated with circular or slotted holes in accordance with the requirements of AASHTO M-175. The perforated pipe or the excavated trench shall be wrapped with a geo-fabric (type DF or approved equal) barrier to prevent the migration of fine backfill material into the pipe.

413.4 Corrugated-Wall Poly-Vinyl Chloride (PVC) Sewer Pipe

Corrugated-Wall Poly-Vinyl Chloride (PVC) Sewer Pipe and Fittings, labeled as "CW PVC" on the plans, shall conform to the requirements of the Specification for non-pressure Poly-Vinyl Chloride (PVC) Corrugated Sewer Pipe with a Smooth Interior and Fittings, ASTM F 949 and UNI-BELL specifications UNI-B-9 for sizes 4-inch, 6-inch, 8-inch, 10-inch, 12-inch, 15-inch and 18-inch.

Pipe shall have a smooth interior with solid cross sectional rib exterior. Exterior ribs shall be perpendicular to the axis of pipe to allow placement of sealing gaskets without additional cutting or machining. The pipe wall will be homogeneous and containing no seams. Pipe shall be made

of PVC material having a cell classification of 12454-B, 12454-C, and 13364-B per ASTM D-1784. Minimum pipe stiffness per ASTM D-2412 shall be 60 PSI for 8-inch thru 18-inch and 46 PSI for 21-inch and 24-inch pipe sizes. Pipe shall withstand impact of 210 ft-lbs for 8-inch and 220 ft-lbs on larger sizes. Standard lengths shall be thirteen (13) foot or twenty (20) foot lengths. There shall be no evidence of splitting, cracking, or breaking when pipe is tested in accordance with ASTM D2412 at 60 percent flattening. Pipe dimensions shall meet the requirements given in ASTM F949-93a when measured in accordance with ASTM D2122.

Joints shall be rubber gaskets and meet the requirements of ASTM Specifications F-477. Joints shall meet soil tightness requirements of AASHTO 26.4.2.4(e). Solvent cement shall not be used to join pipe lengths or fittings to pipe lengths. The assembled joint shall pass the performance tests as required in ASTM D-3212.

PVC pipe will be allowed to be used up to twenty-four (24) inch diameters unless specified differently in Contract Documents.

413.5 Poly-Vinyl Chloride Pressure Pipe and Fittings

Pressure pipe and fittings, labeled as “C900 PVC” or “C905 PVC” on the plans, shall conform to the requirements of AWWA Standard for Poly-Vinyl Chloride (PVC) Pressure Pipe and Fabricated Fittings, four (4) inches through twelve (12) inches, for Water Distribution, Pressure Class 150 (DR 18), AWWA C900. and AWWA C-905 for fourteen (14) inch through twenty-four inch.

The joints shall be integral bell with electrometric gaskets, or couplings with solvent weld and rubber gaskets. The fittings for PVC pressure pipe shall conform to the requirements of those for water main within Section 500 and subsequent subsections.

PVC pipe will be allowed to be used up to twenty-four (24) inch diameters unless specified differently in Contract Documents.

413.6 ABS and PVC Composite Sewer Pipe and Fittings

Pipe furnished under this classification shall meet the material requirements set forth in ASTM Designation D-2680 and all subsequent revisions thereof, including the following detained requirements. Resin used in the manufacturing of PVC composite sewer pipe shall meet the requirements of ASTM D-3034.

ABS and PVC Composite Sewer Pipe and fittings shall be marked as indicated below.

Pipe shall be clearly marked as follows at intervals of five (5) feet or less:

1. Name of manufacturer or principal supplier,
2. Nominal diameter,
3. ABS,
4. ASTM Designation D-2680, and
5. Extrusion date, period of manufacture, and/or lot number.

ABS pipe will be allowed to be used up to twenty-four (24) inch diameters unless specified differently in Contract Documents.

Fittings and couples shall be marked as follows:

1. Name of manufacturer or principal supplier,
2. Nominal diameter, and
3. ASTM Designation D-2680.

Attachment of couplings and saddle fittings and field joining of pipe sections and fittings shall be accomplished by solvent welding or rubber gaskets in accordance with the recommendations of the pipe manufacturer. All exposed filler material shall be field coated with ABS or PVC Solvent Cement. Approved adaptors shall be provided for transition to other types of pipe.

Pipe shall be subject to rejection for failure to conform to material requirements of ASTM D-2680 or any of the following reasons:

a. Distortion or puncture of the inner plastic shell. Distortion or punctures of the outer shell shall not be reasons for rejection if the interior shell is unaffected and such exterior distortion or puncture is suitably repaired with a solvent welded patch to the satisfaction of the Engineer.

b. Voids in the concrete filler at pipe ends, exceeding one (1) inch in depth as measured from the pipe end and exceeding ten (10) percent of the pipe circumference. However, this pipe may be used if the faulty pipe end is sawed off and coated to the satisfaction of the Engineer.

c. Through cracks in coupling.

d. Faulty attachment of couplings or fitting spurs.

413.7 Corrugated High Density Polyethylene (HDPE) - Smooth Inner Liner Pipe

High density polyethylene corrugated exterior/smooth interior pipe shall conform to the specifications in this Subsection. Four (4) through ten (10) inch diameters shall meet all the requirements of Specification for Corrugated Polyethylene Drainage Tubing, three (3) to ten (10) inch diameter, AASHTO M252, Type S, with the addition that the pipe have a smooth interior liner. Twelve (12) to twenty-four (24) inch diameters shall conform to Specification for Corrugated Polyethylene Pipe, and twelve (12) to thirty-six (36) inch diameter shall conform to AASHTO M294, Type S. The nominal size for the pipe and fittings is based on the nominal inside diameter of the pipe.

Material shall meet Specification for Polyethylene Plastics Molding and Extrusion Materials, ASTM D1248 Type III, Category 4 or 5, Grade P33 or P34, Class C with the applicable requirements defined in ASTM D1248; or Specification for Polyethylene Plastics Pipe and

Fittings Materials, ASTM D3350 Cell Classification 324420C. Virgin materials for pipe and fitting production shall be high density polyethylene conforming with the minimum requirements of cell classification 335400C as defined and described in ASTM D3350. All materials must meet the requirements of the "Plastic Pipe Institute" (PPI) third party certification program. PPI stickers must be attached to the pipe as shipped to insure that the pipe meets the requirements of this third party certification program. The manufacture, upon request shall supply PPI certifications.

Coupling bands shall cover at least one full corrugation on each section of pipe. When gasket coupling bands are required, the gasket shall be made of closed-cell synthetic expanded rubber meeting the requirements of Specification for Flexible Cellular Materials - Sponge or Expanded Rubber, ASTM D1056, Type 2. Gaskets shall be installed on the coupling band by the pipe manufacturer. All coupling bands shall meet or exceed the soil-tightness requirement of the AASHTO Standard Specification for Highway Bridges. The ends of the pipe shall be cut squarely and cleanly so as not to adversely affect joining.

All manhole to pipe, inlet to pipe and pipe to pipe connections shall be gasket. The pipe lengths shall be connected using a gasket integral bell and spigot joint. The spigot end of the pipe shall be furnished with a factory installed profile rubber O-ring gasket meeting the specifications of ASTM F-477. All pipe joints shall meet the laboratory testing requirements of ASTM D-3212. The manufacture upon request shall supply independent laboratory certifications documenting that the product shipped has meet the requirements of ASTM D-3212. The pipe shall be shipped with a removable wrap to protect the gasket. Lubrication shall be applied to the joint prior to pushing the bell into the gasket. At least three (3) corrugations of the spigot end must insert into the bell end of the pipe. New manholes shall be constructed with an A-Lok gasket or approved equal.

Deflection tests shall be performed for all high density polyethylene pipe installations. Testing shall conform to Section 402.

A minimum of two (2) feet of cover shall be placed over the pipe prior to construction loading in excess of H-20. If the cover is less than two (2) feet, it is required that a two (2) foot temporary cover be built up in areas where construction traffic is being routed.

HDPE pipe and fittings may be used for storm underdrain, and shall conform to the requirements of AASHTO M 252 Type SP. The pipe shall have Class 2 perforations in accordance with AASHTO M 252. The perforated pipe or the excavated trench shall be wrapped with a geo-fabric barrier to prevent the migration of fine backfill material into the pipe.

HDPE pipe will be allowed to be used up to twenty-four (24) inch diameters unless specified differently in Contract Documents.

413.8 Cast Iron Sewer Pipe and Fittings

Cast iron pipe and fittings furnished under these specifications shall be of the commercial grade known as "Extra Heavy" and shall be the requirements of AWWA C-110, and all subsequent revisions thereof.

Cast iron pipes and fittings shall be carefully examined for defects. Castings shall be sound and free from cracks, sand holes, blow holes and cold shots.

Cast iron pipes and fittings shall be furnished coated. The pipe and fittings shall be uniformly coated with coal tar pitch or similar material suitable for the purpose that is adherent, not brittle, and without a tendency to scale. The coasting shall be evenly and smoothly applied to all surfaces.

Cast iron fitting shall have hub and spigot ends corresponding with the dimensions for straight pipe of the same diameter and shall conform in all respects to the Specifications for straight pipe.

Each length of cast iron pipe and each fitting shall be plainly marked with the manufacturer's initials or registered trade mark by which it can be readily identified and marked with the letters to indicate "EH" – Extra Heavy.

Cast iron pipe shall be joined by means of a compression type rubber gasket or by means of a mechanical joint meeting the requirements of AWWA C-110.

413.9 Ductile Iron Sewer Pipe and Fittings

Ductile iron pipe and fittings furnished under these specifications shall meet the requirements of ASTM A-746, and all subsequent revisions thereof. Ductile iron gravity sewer pipe shall consist of pipe centrifugally cast in metal or sand-lined molds having bell and spigot ends designed for rubber gasket push-on joints.

Ductile iron pipe shall have a cement mortar lining and internal and external bituminous coatings in accordance with Section 51.8 of AWWA C-151. The thickness of the standard cement lining shall be 1/16 inch for sizes three (3) though twelve (12) inch in diameter, and 3/32 inch for sizes fourteen (14) through twenty four (24) inches.

Each ductile iron pipe and fitting shall have the weight, class or nominal thickness and casting period shown on it. The manufacturer's mark, the year in which the pipe was produced, and the letters "DI" or "DUCTILE" shall be cast or stamped on the pipe. Markings shall be clear and legible and all cast marks shall be on or near the bell. All letters and numerals on pipe sizes fourteen (14) inches or larger shall not be less than ½ inch in height.

413.10 Vitrified Clay Sewer Pipe and Fittings

The pipe, fittings and accessories shall be of extra strength vitrified clay and shall conform to the requirements of specifications for extra strength clay pipe, ASTM C-700 for either glazed or unglazed clay pipe. Factory manufactured joints used with vitrified clay bell and spigot pipe shall be in accordance with ASTM C-425.

413.11 Non-Reinforced Concrete Sewer Pipe

Pipe furnished under this classification shall meet the requirements set forth in ASTM Designation C-14, and all subsequent revisions thereof, except as modified herein or in the Special Provisions of the Contract. Rubber gaskets shall conform to the requirements of the Specification for Joints for Circular Concrete Sewer and Culvert Pipe, Using Rubber Gaskets, ASTM C 443.

413.12 Reinforced Concrete Sewer Pipe and Fittings

Reinforced concrete pipe, fittings, and accessories, labeled as "RCP" on the plans, shall conform to the requirements of the Specification for Reinforced Concrete Culvert, Storm Drain, and Sewer Pipe, ASTM C-76. Reinforced concrete elliptical pipe, fittings and accessories, labeled as "HERCP" on the plans, shall conform to the requirements of the Specification for Reinforced Concrete Elliptical Culvert, Storm Drain, and Sewer Pipe, ASTM C-507. Unless otherwise specified, reinforced concrete culvert and storm drain shall be minimum Class III (ASTM C-76) and reinforced concrete elliptical culvert and storm drain shall be minimum Class HE-III (ASTM C-507).

Acceptance of reinforced concrete pipe shall be on the basis of plant load-bearing test, material tests, and inspection of manufactured pipe for visual defects and imperfections.

Joints for sanitary sewer pipe shall be designed for the use of confined "O"-ring type rubber gaskets

Joints for storm sewer pipe shall be designed for the use of rubber gaskets, flexible plastic gaskets, cold plastic sewer joint compound, external sealing bands, or a combination of the above. Unless otherwise specified, circular reinforced concrete pipe shall be installed with rubber gasket joints, flexible plastic gaskets, cold plastic sewer joint compound, external sealing bands, or a combination of the above, at the Contractor's option.

Rubber gaskets shall conform to the requirements of the Specification for Joints for Circular Concrete Sewer and Culvert Pipe, Using Rubber Gaskets, ASTM C 443. Flexible plastic gaskets shall conform to the requirements of the Specification for Joints for Circular Concrete Sewer and Culvert Pipe Using Flexible Watertight Gaskets, Type B Flexible Plastic Gaskets, AASHTO M-198. Cold plastic sewer joint compound shall be SealTight Cold Plastic Sewer Joint Compound as manufactured by W.R. Meadows, Inc., or approved equal. External sealing bands shall be Mac Wrap External Joint Collars as manufactured by Mar-Mac Manufacturing Company, Inc., or approved equal.

413.13 Reinforced Concrete Sewer Pipe with Poly-Vinyl Chloride (PVC) Liner

Reinforced Concrete Pipe with PVC Liner, labeled as "RCP w/ PVC Liner" on the plans, shall conform to the requirements of the Standard Specification for Reinforced Concrete Culvert, Storm Drain, and Sewer Pipe, ASTM C-76. Unless otherwise specified, reinforced concrete pipe shall be minimum Class III (ASTM C-76).

The reinforced concrete pipe shall be lined with PVC meeting the requirements of ASTM D 1784.

Pipe shall be clearly marked as “RCP with PVC”.

Joints for reinforced concrete sewer pipe with PVC liner shall conform to the requirements of the Standard Specification for Joints for Concrete Pipe and Manholes, using Rubber Gaskets, ASTM C-443.

413.14 Precast Reinforced Concrete Box Sections

Single cell precast reinforced concrete box sections furnished under this classification shall meet the requirements set forth in ASTM C-1433.

The following information shall be clearly marked on each box section by indentation, waterproof paint, or other approved means.

1. Box section span, rise, table number and design earth cover.
2. Date of manufacture.
3. Name or trademark of manufacturer.
4. Each section shall be clearly marked by indentation on either the inner or outer surface during the process of manufacture so that the location of the top will be evident immediately after the forms are stripped. In addition, the word “top” shall be lettered with waterproof paint on the inside top surface.

413.15 Concrete Apron Endwalls

Concrete Apron Endwalls for concrete pipe sewers, labeled as “RCP AE” on the plans, shall be manufactured with reinforcement and concrete conforming to the pertinent requirements for Class II, Wall B, reinforced concrete pipe as specified in the Specification for Reinforced Concrete Culvert, Storm Drain, and Sewer Pipe, ASTM C 76. Concrete Apron Endwalls for concrete elliptical pipe sewers, labeled as “HERCP AE” on the plans, shall be manufactured with reinforcement and concrete conforming to the pertinent requirements for Class HE-III reinforced concrete elliptical pipe as specified in the Specification for Reinforced Concrete Elliptical Culvert, Storm Drain, and Sewer Pipe, ASTM C 507. Apron endwalls shall be in accordance with the designs, dimensions, and details shown on the Standard Detail Drawings.

413.1 Corrugated Metal Pipe and Pipe Arches

The pipe, fittings, apron endwalls and accessories furnished under this classification shall be of corrugated metal and shall conform to the requirements of the Specification for Corrugated Metal Culvert Pipe, AASHTO M-36 and M-274 and the dimensions shown on the plans. Unless otherwise specified on the plan or in the special provisions, the pipe thickness shall be a minimum of 16-gauge.

Coupling bands shall conform to AASHTO Designation M-36 and shall be made of the same base metal as the pipe. The bands shall not be less than seven (7) inches wide for diameters of eight (8) inches to thirty (30) inches, inclusive; not less than twelve (12) inches wide for pipe with diameters thirty-six (36) inches to sixty (60) inches, inclusive; and not less than twenty-four (24) inches wide for pipe with diameters greater than sixty (60) inches. Such bands shall be so constructed as to lap on an equal portion of each of the pipe sections to be connected, and preferably shall be connected at the ends by galvanized angles having minimum dimensions of 2x2x3/16 inches.

The seven (7) inch band shall have at least two (2) galvanized bolts not less than ½ inch diameter. The twelve (12) inch band shall have three (3), ½ inch diameter galvanized bolts. The twenty-four (24) inch band shall have at least five, ½ inch diameter galvanized bolts. Other equally effective methods of connecting the pipe may be used if approved by the Engineer. Couplings bands may be two numerical thicknesses lighter than that used for the pipe but not less than 0.052 inches thick (18 gauge).

413.17 Corrugated Aluminum Pipe and Pipe Arches

The pipe, fittings, apron endwalls and accessories furnished under this classification shall conform to the requirements of the specifications for corrugated aluminum alloy culverts and underdrains, AASHTO M-196 and to the dimensions shown on the plans.

Coupling bands shall meet the requirements set forth in AASHTO Designation M-196.

413.18 Bituminous Coated Corrugated Culvert Pipe and Pipe Arches

Bituminous coated pipe and fittings furnished under this classification shall conform to the requirements of the Standard Specifications for Corrugated Metal Pipe and Pipe Arches, AASHTO M-36, or Corrugated Aluminum Pipe and Pipe Arches, AASHTO M-196, and in addition, shall be coated with a bituminous material to minimum thickness of 0.05 inches, measured on the crests of the corrugations. The bituminous material shall meet the requirements set forth in AASHTO Designation M-190.

413.19 Polymeric Coated Culvert Pipe and Pipe Arches

The pipe, fittings, apron endwalls and accessories furnished under this classification shall conform to the requirements of the specifications for zinc coated (galvanized) iron or steel sheets for culverts and underdrains, AASHTO Designation, M-218 and the specifications for pre-coated galvanized steel sheet for culverts and underdrains, AASHTO Designation, M-246 and to the dimensions shown on the plans.

413.20 Concrete and Corrugated Metal Sewer Wyes, Tees, Angle-Sections, and Other Special Precast Sections

Whenever shown on the plans, or directed by the Engineer, the Contractor shall furnish and install elbows, tees, wyes, reducers, or other prefabricated fittings for reinforced concrete pipe or

corrugated metal pipe sewer installation. Fittings shall conform to Subsection for Reinforced Concrete Pipe and to Subsection for Corrugated Metal Pipe. Elbows shall be fabricated to a tolerance of five (5) degrees, plus or minus of the angle of intersection shown on the plans.

413.21 Joint Ties

Joint ties shall be installed at the upstream and downstream ends of circular and horizontal elliptical concrete culvert. Tie the last 3 sections or, if using apron endwalls, the endwall and the last 2 sections.

413.22 Existing Manhole Pipe & Pipe to Pipe Connections

Field taps shall have the tapping pipe be a minimum of two (2) pipe sizes smaller than the main to be allowed. Tapping method and location must be approved by the Engineer. All other taps shall be connected with a wye or tee.

All existing manholes/inlets and pipes to be field tapped with non-rigid pipe shall be core drilled and gasketed with Kor-N-Seal, or Insert-A-Tee, respectively, or approved equal. The cost to tap existing manholes and pipes shall be considered incidental to the contract. The cost to remove existing sewer stubs at manholes shall be considered incidental to the contract.

The cost to tap existing manhole to pipe and pipe to pipe connections, and all materials necessary, shall be incidental to the Contract.

413.23 Measurement and Payment

Measurement and payment for the sewer materials shall be in accordance with the appropriate installation section of these Standard Provisions.

Page Intentionally Left Blank

SECTION 414

SANITARY SEWER PIPES AND LATERALS

414.1 General

Perform work for installation of sanitary sewer construction.

Unless otherwise shown on the plans or specified in the contract, the materials furnished and installed in the work shall conform to the requirements specified herein for the type and class of material named.

Unless otherwise directed by the Engineer, all pipe and accessories shall be unloaded at the point of delivery, and hauled to and distributed at the site of the work by the Contractor. The materials shall at all times be handled with care to avoid damage. The material shall not be dropped or bumped against the ground, other pipe and accessories already on the ground, or any other object on the ground.

The Contractor shall furnish random lengths of pipe for each contract as may be required for the proper placement of fittings or structures. The costs of random lengths of pipe shall be included in the contract unit prices for the respective sizes and types of pipe.

Unless otherwise specified, references to various standard specifications and test methods shall be understood to mean the specification or test method, which is current on the date of advertisement for bids.

414.2 Materials

All mainline sanitary sewers shall be Polyvinyl Chloride Pipe (PVC), High Density Polyethylene (HDPE) or as noted on the plans.

Polyvinyl Chloride Pipe, Schedule 40, shall be used for all 4” or 6” sanitary risers and connections.

Fittings such as elbows, tees, wyes, and others shall be of materials and construction corresponding to and have a design compatible with the adjacent pipe. All new connections off the new sewer main, with pipe diameters eighteen (18) inches or less, shall be complete with manufactured tees. All new connections off the new sewer main, with pipe diameters twenty-one (21) inches or greater, may be completed with manufactured tee, or field tapped as approved by the Engineer. Approved adapters shall be provided for transitions to other pipe types.

When a pipe is labeled “Remove and Relay” (pipe size), this indicates the size of the pipe being relayed, not the size of the pipe being removed.

The cost of bedding stone and backfill shall be considered incidental to the Contract.

Pipe and fittings furnished under this classification shall meet the requirements of ASTM D3034, and ASTM F679. The PVC Class shall be SDR 35 unless otherwise specified in the plans.

Deflection tests shall be performed for all polyvinyl chloride pipe installations whether new construction or re-laid sewer. Testing shall conform to the "City of Green Bay Standard Specifications" and Construction Standards for Public Works Construction current Edition.

All manholes to pipe, inlet to pipe, and pipe-to-pipe connections shall be gasketed. New manholes and inlets shall be constructed with an A-Lok gasket, Kor-N-Seal, or approved equal.

Pipe and fittings furnished under this classification shall meet the requirements of AASHTO M252 or AASHTO M294, Type S unless noted otherwise.

Virgin materials for pipe and fitting production shall be high-density polyethylene conforming to the minimum requirements of cell classification 335400C as defined and described in ASTM D3350, unless noted otherwise. All materials must meet the requirements of the "Plastic Pipe Institute" (PPI) third party certification program. PPI stickers must be attached to the pipe as shipped to insure that the pipe meets the requirements of this third party certification program. The manufacturer, upon request, shall supply PPI certifications.

414.3 Construction Methods

A. General.

Whenever shown on the plan, or directed by the Engineer, the Contractor shall install sanitary sewer main, connections, install wyes into the sanitary sewer mains for the installation of sanitary sewer connections, and set risers into wyes.

The contractor is responsible for locating and reconnecting all in service connections. The cost of this work shall be included in the bid price for the respective size connections.

B. Laying Pipe.

The pipe, fittings and accessories shall be of the size, class, type, and design; and shall be laid at the locations and to the required lines and grades; all as shown on the plans, required by the contract, or directed by the Engineer. Wherever the word "pipe" appears in this Subsection, it shall be understood to include pipe, fittings, and accessories.

The proper installations of structures and fittings, whose locations are shown on the plans and laid out by the Engineer shall be accomplished by the use of full lengths of pipe furnished by the Contractor. All field cuts of all types of pipe shall be made with an approved mechanical pipe cutter or with a power saw in order to make a straight, true cut without chipping and cracking the pipe.

A flexible watertight connections shall be used for plastic sewer pipe connections to structures.

The laying of pipes in finished trenches shall commence at the lowest point and shall proceed towards the upper end, and the pipe shall be laid so that the spigot or tongue ends point in the direction of flow.

Jointing surfaces shall be carefully cleaned before pipes are lowered into trenches. The pipes shall be lowered so as to avoid unnecessary handling in the trench. The pipe shall not be supported on just the bell and spigot portions of the pipe. The contractor shall excavate out a bell hole which accepts the pipe's bell section. Each section shall have a firm bearing throughout its length and shall be true to the line and grade required.

The method of connecting pipes together shall be such that there will be no damage to the pipes, and the joints will be properly adjusted and will not be excessively large. The pipes shall be fitted and matched so that when set firmly to line and grade they will form a sewer with a smooth and uniform invert.

The pipe shall not be laid within ten (10) feet of the excavating nor within forty (40) feet of a blasting operation. The pipe shall not be laid in water or on frozen trench bottoms, or when, in the opinion of the Engineer, the trench conditions or weather are unsuitable for the proper performance of the work.

No length of pipe shall be laid until the previously laid length of pipe has been sufficiently backfilled to hold it securely in place during the jointing operation. If, in making a joint, any previously laid pipe is disturbed, such pipe shall be removed and re-laid. Adequate backfill shall be placed on the pipe to prevent floating. Any pipe which has been floated shall be removed and re-laid at the expense of the Contractor.

Construction of a stub for future use, the Contractor shall place temporary plug or cap the stub. This work shall be considered incidental to the installation of length of pipe.

The Contractor shall furnish suitable lifting and handling devices designed to distribute the weight of the pipe over the length of the pipe and prevent high stresses over small areas.

If concrete pipe is installed, concrete pipe lift holes shall be sealed with suitable plugs and concrete or other approved pre-manufactured plugs.

All water must be kept out of the bell hole of the pipe until the joint is completed and water shall not be allowed to rise in or above the pipe until the trench is filled at least one (1) foot above the top of the pipe.

Before leaving the work for the night, or during a storm, or for any reason, care must be taken that the unfinished end of the sewer is securely closed with a tightly fitting plug. The Contractor at no additional cost to the City shall remove any earth or other materials that may find entrance into the sewer.

C. Sanitary Sewer Lateral Connections.

Installation of sanitary sewer laterals connections shall comply with all the requirements set forth herein for the installation of the sewer main, including excavation, backfilling, bedding, tracer

wire installation, laying and jointing the pipe. Sanitary sewer connections shall be either four (4) or six (6) inch Schedule 40 PVC pipe or as approved by the Engineer. Sanitary sewer connections shall typically be laid with a maximum grade of one-half (1/2) inch per foot and a minimum grade of one-fourth (1/4) inch per foot, any variations from these standards shall be approved in writing from either the Engineer within the right of way or a City Plumbing Inspector outside the right of way. The depth of proposed or reconstructed sanitary sewer connections at the property line shall be a minimum of eight (8) feet with an optimum depth between ten (10) feet and twelve (12) feet. Unless otherwise specified, sanitary sewer connections, wyes and tees, shall be of the same material as the sewer main pipe. Where connections are to be connected to risers the Contractor shall furnish and install the required fittings.

For the installation of a new connection in the public right-of-way, unless otherwise specified in the plans or directed by the Engineer, the size of a newly constructed residential sanitary sewer connection to be installed between the public sanitary sewer main and the property line shall be four (4) inches in diameter. The Engineer may require the size of the connection to be six (6) inches or greater depending on the lot size or proposed land use.

The depth of the proposed sanitary sewer lateral at the property line shall be a minimum of eight (8) feet with an optimum depth between ten (10) feet and twelve (12) feet or a minimum one (1) percent slope from the sanitary main.

D. Sanitary Sewer Lateral Reconnects.

Reconnect shall include reconstructing sanitary sewer connections that shall be reconnected to the sanitary sewer main. This item shall include necessary wyes and fittings, PVC pipe, four (4) inch or larger, crushed gravel bedding and backfill required for the sanitary lateral reconnection. The Contractor shall be responsible for maintaining the normal flow of wastewater during reconnection of the connections.

Unless otherwise specified in the plans, when a portion of a sanitary sewer lateral in the public right-of-way is to be reconstructed, repaired or replaced, the inside diameter of the new lateral to be installed shall match that of the lateral which is being replaced. All new lateral connections shall be a minimum of four (4) inches in diameter. For purposes of this requirement, all five (5) inch connections shall be considered to be six (6) inches in diameter. It shall not be permissible, in any event, to decrease the diameter of a sanitary sewer connection in the direction of flow.

Where a sanitary sewer connection is being re-laid in the public right-of-way and bends are required to reconnect the new connection to the ends of the existing connection or sewer main, the Contractor shall use Schedule 40 PVC bends that provide a change in the direction of flow of 45 degrees or less. Bends placed in a connection shall be separated by straight pieces of pipe minimum of 1 foot.

Where a connection is being re-laid in the public right-of-way and connected to pipes of differing materials and/or sizes, standard flexible couplings shall be used. The couplings to be used shall provide for a water-tight, air-tight fit around the outside diameter of each pipe and shall be securely fastened with two stainless steel bands at each pipe end. Couplings that reduce

the pipe cross sectional area in the direction of the flow shall not be allowed. The bedding shall be compacted to provide a solid foundation for the connection such that when backfilling the trench the lateral does not sag.

For connections that are in close proximity to terrace trees (as determined by the Engineer), the situation shall be reviewed on a case by case basis by the Engineer and the City Forester. The Contractor shall use construction methods and equipment to minimize tree damage as directed by the Engineer. In extreme cases the Engineer may elect to terminate connection installation prior to conflict with the tree and a new lateral shall be constructed around the tree.

The depth of the reconstructed sanitary sewer lateral at the property line shall be a minimum of eight (8) feet with an optimum depth between ten (10) feet and twelve (12) feet or a minimum one (1) percent slope from the sanitary main.

Live sewer connections that will be reconnected to the sewer main, will be re-laid from the sewer main to competent lateral pipe, or as directed by the Engineer.

Construction of new lateral connections shall be completed from a point 5 feet behind the curb to the sewer main.

E. Sanitary Sewer Wyes or Tees

Unless otherwise specified, the openings in the wyes or tees for connections and riser pipes shall be of the same size and material as the sanitary sewer connection to be installed. In the event that a sanitary sewer connection is not being installed coincident with the wye, the size of the wye shall meet the sizing requirements set forth for sanitary sewer connections in Subsections 414.3(C) and 414.3(D) of these Specifications.

Wye openings, except those that are to be used for riser connections, shall be closed watertight with covers of the same material as the wye and shall be well sealed.

All new construction shall use either pre-manufactured wyes or tees, the use of saddles or Insert-A-Tees will not be allowed.

Connecting to an existing sanitary main shall be by cutting out a portion of the existing sanitary main, inserting a pre-manufactured PVC wye or tee, and making the connection with the existing sanitary main by use of Fernco style adaptors or approved equal. Proper placement and compaction of crushed bedding stone under the wye or tee is required to create a solid foundation prior to backfilling of the sanitary main and connection to prevent sagging or flattening of the grade/offset joint.

Connecting to Pipe with CIPP Liner all laterals shall be re-laid from the main after the CIPP installation has been completed. The Contractor shall use a Fernco® strap on saddle with a tap saddle pressure kit (TSPK-46) or approved equal. The host pipe shall be completely removed at the lateral location so that the saddle and stainless steel bands are in direct contact with the CIPP pipe. Install the Fernco® strap on saddle and tap saddle pressure kit according to the manufacturer's specification for installation. The cost of the work shall be included in the

appropriate bid item. Proper placement and compaction of crushed bedding stone under the wye or tee is required to create a solid foundation prior to backfilling of the sanitary main and connection to prevent sagging or flattening of the grade.

F. Sanitary Sewer Risers

Unless otherwise specified, the riser pipes shall be of the same size and material as the sanitary sewer connection to be installed. In the event that a sanitary sewer connection is not being installed coincident with the riser pipe, the size of the riser pipe shall meet the sizing requirements set forth for sanitary sewer connections.

The depth of the proposed or reconstructed sanitary sewer lateral at the property line shall be a minimum of eight (8) feet with an optimum depth between ten (10) feet and twelve (12) feet or a minimum one (1) percent slope from the sanitary main.

For those instances in which a sanitary connection is not being installed concurrent with the riser pipe, a vertical reinforcing rod, one-half (1/2) inch in diameter, shall be strapped to the riser pipe and extended to within eighteen (18) inches of the proposed finished street grade for the case of future location by the City. In backfilling the trench, special care must be used at the location of riser pipes to tamp the backfill material about the entire length of the risers in such a way as to maintain them in a vertical position and not to disturb them.

For sanitary laterals less than eight (8) feet in depth at the point of connection at the main the riser reconnection should be installed between back of curb and the right of way in lieu of at the main.

G. Joints

<u>New Pipe to New Pipe</u>

Jointing materials shall conform to the requirements specified in Section 413 Sewer Pipe Materials of these Specifications, for the type of pipe being installed.

Joints shall not be made until the pipe is in the trench and set to true line and grade. Lengths of pipe which are joined together outside of the trench shall be removed from the project immediately.

Prior to making joints, the jointing surfaces shall be inspected for chips, cracks, or other defects in the joints and jointing materials. The jointing surfaces shall be carefully cleaned and lubricated with a vegetable *non-corrosive* lubricant or a lubricating adhesive. Lubricant shall be applied to both the bell and spigot surfaces of the joint. The lubricant shall be that recommended by the gasket manufacturer for the particular type of gasket being installed.

Care shall be taken when shoving or pulling the pipes together in order not to damage the pipe or the joints and jointing materials. The pipes shall be in proper alignment and to the proper grade prior to applying the pressure necessary to make the joint.

New Pipe to Existing Pipe

A concrete collar, PVC Coupling or a compression style coupling shall be required at the junction of a new pipe to an existing pipe as specified on the plan set or as required in the field by the Engineer. It is expected that the Contractor shall saw cut the existing main at the location shown to accommodate a clean joint for the installation of the couplings. If the Contractor for his/her convenience deems it more suitable to remove the existing pipe to a full joint, the additional pipe required to connect the new pipe is to be the Contractors responsibility and shall not be compensated. The fitting shall be placed as shown on the plan or as directed by the Engineer and shall be constructed per Standard Detail Drawing.

H. Chemical Grout Sanitary Sewer

Chemical Grout shall be Avanti® or equal. The Contractor shall follow the manufacturer's specifications for installation, and the manufacturer's recommendations for grout type.

414.4 Measurement and Payment

A. Sanitary Sewer Pipes.

Sanitary sewer pipes shall be measured to the nearest tenth of a foot of each of the various types, classes and sizes of pipe installed at the various depths, measured along the centerline of the pipe center to center of junctions and fittings. The quantity to be paid for includes construction through manholes, from center of manhole casting to center of manhole casting. Main extensions continuing through manholes shall be measured from center of manhole casting to the end of pipe.

The contract price shall include furnishing all materials necessary to perform the work; excavation of the trench, except tunneling and jacking; installation and removal of sheeting and bracing; disposal of surplus material from the trench; backfilling the trench and compaction of the backfill material; embankment over the sewer using surplus material from the excavation of the trench; bedding the pipe; laying the pipe and installing the fittings and accessories; tracer wire; jointing and sealing of joints in pipe, fittings and accessories; encasement, where specified; connections to new structures; cleaning and testing the sewer; restoring the site; and all other work incidental to the installation of sanitary sewers.

B. Sanitary Sewer Connections.

Connections.

Sanitary sewer connections shall be measured by length in feet of each of the various types, classes and sizes of pipe installed, measured along the centerline of the pipe from the wye opening to the end of the connection pipe, or from the top of the riser to the end of the connection pipe, whichever the case may be.

The contract price shall include furnishing all materials, including required fittings where connections are connected to risers, necessary to perform the work; excavation of the trench; installation and removal of sheeting and bracing; backfilling the trench; and compaction of the backfill material; bedding the pipe; laying the pipe and installing the fittings; jointing and sealing of joints in pipe and fittings; encasement, where specified; cleaning out the connection; restoring the site; and all other work incidental to the installation of sanitary sewer connections.

Where the water service is installed in the same trench as the sanitary sewer connection, the Contractor shall backfill the sanitary sewer connection trench to the proper elevation for the installation of the water service; after installation of the water service, the Contractor shall complete the backfilling of the trench, all at no extra cost to the City.

Reconnect.

Reconnect shall be measured and paid as each upon completion and accepted, and shall include necessary wyes or fittings and PVC pipe, 4" or larger, for the connection of the lateral and shall not exceed a length of five (5) feet. Sanitary laterals that are re-laid, the first five (5) feet will be paid for as a reconnect and the remainder of the sanitary lateral shall be paid by the lineal foot.

The contract price for re-laid connections shall include furnishing all materials, including required fittings where connections are connected to risers or mains, necessary to perform the work; excavation of the trench; installation and removal of sheeting and bracing; backfilling the trench; and compaction of the backfill material; bedding the pipe; laying the pipe and installing the fittings; tracer wire; jointing and sealing of joints in pipe and fittings; encasement, where specified; cleaning out the connection; restoring the site; and all other work incidental to the installation of sanitary sewer connections.

C. Sanitary Sewer Risers.

Sanitary sewer risers shall be measured by length in vertical feet of each of the various types and sizes installed, measured from the wye or tee opening to the top of the riser.

The contract price shall include furnishing all materials, including fittings, necessary to perform the work; including any additional excavation required; special backfilling precautions as required; and all other work incidental to the installation of risers.

D. By-pass Pumping.

Wastewater control shall be considered incidental to the cost of, constructing, repairing or reconstructing sanitary sewer.

E. Chemical Grout Sanitary Sewer

Measurement for Chemical Grout shall be paid as an Each for each joint grouted for the entire circumference of the pipe or structure. Measurement for Chemical Grout Sanitary Sewer shall be paid as an Each for each joint grouted in the sewer (manhole, lateral, or main). Payment shall be full compensation for prepping, providing and placing the Chemical Grout, and for all labor, tools, equipment, and incidentals necessary to complete the work.

The City will pay for measured quantities at the contract unit price under the following bid item:

ITEM #	DESCRIPTION	UNIT
414.01	Construct - 8" Sanitary Sewer	LF
414.02	Construct - 10" Sanitary Sewer	LF
414.03	Construct - 12" Sanitary Sewer	LF
414.04	Construct - 15" Sanitary Sewer	LF
414.05	Construct - 18" Sanitary Sewer	LF
414.06	Construct - 21" Sanitary Sewer	LF
414.07	Construct - 24" Sanitary Sewer	LF
414.08	Construct - 27" Sanitary Sewer	LF
414.09	Construct - 30" Sanitary Sewer	LF
414.10	Construct - 36" Sanitary Sewer	LF
414.11	Remove & Relay - 8" Sanitary Sewer	LF
414.12	Remove & Relay - 10" Sanitary Sewer	LF
414.13	Remove & Relay - 12" Sanitary Sewer	LF
414.14	Remove & Relay - 15" Sanitary Sewer	LF
414.15	Remove & Relay - 18" Sanitary Sewer	LF
414.16	Remove & Relay - 21" Sanitary Sewer	LF
414.17	Remove & Relay - 24" Sanitary Sewer	LF
414.18	Remove & Relay - 27" Sanitary Sewer	LF
414.19	Remove & Relay - 30" Sanitary Sewer	LF
414.20	Remove & Relay - 36" Sanitary Sewer	LF
414.21	Construct 4" Sanitary Lateral	LF
414.22	Construct 6" Sanitary Lateral	LF
414.23	Construct 8" Sanitary Lateral	LF
414.24	4" Sanitary Reconnect	EACH
414.25	4" Sanitary Reconnect	LF
414.26	6" Sanitary Reconnect	EACH
414.27	6" Sanitary Reconnect	LF
414.28	8" Sanitary Reconnect	EACH
414.29	8" Sanitary Reconnect	LF
414.30	4" Sanitary Riser	VF
414.31	6" Sanitary Riser	VF
414.32	5' - 8" Sanitary Spot Repair	EACH
414.33	10' - 8" Sanitary Spot Repair	EACH
414.34	15' - 8" Sanitary Spot Repair	EACH
414.35	20' - 8" Sanitary Spot Repair	EACH
414.36	5' - 10" Sanitary Spot Repair	EACH
414.37	10' - 10" Sanitary Spot Repair	EACH
414.38	15' - 10" Sanitary Spot Repair	EACH
414.39	20' - 10" Sanitary Spot Repair	EACH
414.40	5' - 12" Sanitary Spot Repair	EACH
414.41	10' - 12" Sanitary Spot Repair	EACH
414.42	15' - 12" Sanitary Spot Repair	EACH

414.43	20' - 12" Sanitary Spot Repair	EACH
414.44	5' - 15" Sanitary Spot Repair	EACH
414.45	10' - 15" Sanitary Spot Repair	EACH
414.46	15' - 15" Sanitary Spot Repair	EACH
414.47	20' - 15" Sanitary Spot Repair	EACH
414.48	5' - 18" Sanitary Spot Repair	EACH
414.49	10' - 18" Sanitary Spot Repair	EACH
414.50	15' - 18" Sanitary Spot Repair	EACH
414.51	20' - 18" Sanitary Spot Repair	EACH
414.52	Chemical Grout Sanitary Sewer	EACH

SECTION 415

STORM SEWER PIPES AND LATERALS

415.1 General

Perform work in accordance with the provisions of WisDOT Standard Specifications for Highway and Structure Construction Section 608 except as hereinafter modified.

Unless otherwise shown on the plans or specified in the contract, the materials furnished and installed in the work shall conform to the requirements specified herein for the type and class of material named.

Unless otherwise directed by the Engineer, all pipe and accessories shall be unloaded at the point of delivery, and hauled to and distributed at the site of the work by the Contractor. The materials shall at all times be handled with care to avoid damage. The material shall not be dropped or bumped against the ground, other pipe and accessories already on the ground, or any other object on the ground.

The Contractor shall furnish random lengths of pipe for each contract as may be required for the proper placement of fittings or structures. The costs of random lengths of pipe shall be included in the contract unit prices for the respective sizes and types of pipe.

Unless otherwise specified, references to various standard specifications and test methods shall be understood to mean the specification or test method which is current on the date of advertisement for bids.

Other storm water channels include flumes and drainage ways. Flumes are further detailed in the Standard Detail Drawings. Drainage ways consist of small ditches and swales to large-scale greenways.

415.2 Materials

All mainline storm sewers 12” to 24” diameter, shall be Polyvinyl Chloride Pipe (PVC), or Reinforced Concrete Pipe (RCP) unless otherwise specified in the plans. All mainline sewers greater than 24” in diameter shall be Reinforced Concrete Pipe unless otherwise specified in the plan. Gaskets at joints for concrete gravity flow sewer pipe shall conform to ASTM C1628.

Pipe and fittings furnished under this classification shall meet the requirements of ASTM D3034, and ASTM F679. The PVC Class shall be SDR 35 unless otherwise specified in the plans.

Deflection tests shall be performed for all polyvinyl chloride pipe installations whether new construction or re-laid sewer. Testing shall conform to the “City of Green Bay Standard Specifications” and Construction Standards for Public Works Construction current Edition.

All manholes to pipe, inlet to pipe, and pipe-to-pipe connections shall be gasketed. New manholes and inlets shall be constructed with an A-Lok gasket, Kor-N-Seal, or approved equal.

Polyvinyl Chloride Pipe, Schedule 40, shall be used for 6" storm connections.

Pipe furnished under this classification shall meet the requirements of ASTM C76 for circular pipe and ASTM C507 for elliptical pipe. Rubber type joints for circular concrete sewer pipe shall be in accordance with ASTM C443. Pipe shall be rated as Class III at a minimum.

All 12" catch basin leads and storm connections shall be Polyvinyl Chloride Pipe or Reinforced Concrete Pipe, unless otherwise specified on the plans.

Fittings such as elbows, tees, wyes, and others shall be of materials and construction corresponding to and have a design compatible with the adjacent pipe. All new connections off the new sewer main, with pipe diameters eighteen (18) inches or less, shall be complete with manufactured tees. All new connections off the new sewer main, with pipe diameters twenty-one (21) inches or greater, may be completed with manufactured tee, or field tapped as approved by the Engineer. Approved adapters shall be provided for transitions to other pipe types.

When constructing a stub for future use, the Contractor shall bulkhead the stub. This work shall be considered incidental to construction.

When a pipe is labeled Remove and Relay (pipe size), this indicates the size of the pipe being relayed, not the size of the pipe being removed.

The cost of bedding stone and backfill shall be incidental to the Contract.

415.3 Construction Methods

A. General.

Whenever shown on the plans, or directed by the Engineer, the Contractor shall install storm mains, connections, build wyes into the storm sewer mains for the installation of storm sewer connections, and set risers into wyes.

The contractor is responsible for locating and reconnecting all in service connections. The cost of this work shall be included in the bid price for the respective size connections.

B. Laying Pipe.

The pipe, fittings and accessories shall be of the size, class, type, and design; and shall be laid at the locations and to the required lines and grades; all as shown on the plans, required by the contract, or directed by the Engineer. Wherever the word "pipe" appears in this Subsection, it shall be understood to include pipe, fittings, and accessories.

The proper installations of structures and fittings, whose locations are shown on the plans and laid out by the Engineer, shall be accomplished by the use of random lengths of pipe furnished by the Contractor. All field cuts of all types of pipe shall be made with an approved mechanical pipe cutter or with a power saw in order to make a straight, true cut without chipping and cracking the pipe.

A flexible watertight connections shall be used for plastic sewer pipe connections to structures Flexible Pipe to Manhole Connector.

The laying of pipes in finished trenches shall commence at the lowest point and shall proceed towards the upper end, and the pipe shall be laid so that the spigot or tongue ends point in the direction of flow.

Jointing surfaces shall be carefully cleaned before pipes are lowered into trenches. The pipes shall be lowered so as to avoid unnecessary handling in the trench. Each section shall have a firm bearing throughout its length and shall be true to the line and grade required.

The method of shoving or pulling the pipes together shall be such that there will be no injury to the pipes, and the joints will be properly adjusted and will not be excessively large. The pipes shall be fitted and matched so that when set firmly to line and grade they will form a sewer with a smooth and uniform invert.

The pipe shall not be laid within ten (10) feet of the excavating or within forty (40) feet of blasting operations. The pipe shall not be laid in water or on frozen trench bottoms, or when, in the opinion of the Engineer, the trench conditions or weather are unsuitable for the proper performance of the work.

No length of pipe shall be laid until the previously laid length of pipe has been sufficiently backfilled to hold it securely in place during the jointing operation. If, in making a joint, any previously laid pipe is disturbed, such pipe shall be removed and relaid. Adequate backfill shall be placed on the pipe to prevent floating. Any pipe which has been floated shall be removed and relaid at the expense of the Contractor.

The Contractor shall furnish suitable lifting and handling devices designed to distribute the weight of the pipe over the length of the pipe and prevent high stresses over small areas.

If concrete pipe is installed, concrete pipe lift holes shall be sealed with suitable concrete or other approved plugs.

All water must be kept out of the bell hole of the pipe until the joint is completed and water shall not be allowed to rise in or about the pipe until the trench is filled at least one (1) foot above the top of the pipe.

Before leaving the work for the night, or during a storm, or for any reason, care must be taken that the unfinished end of the sewer is securely closed with a tightly fitting iron or wooden plug. Any earth or other materials that may find entrance into the sewer shall be removed by the Contractor at no additional cost to the City.

C. Storm Sewer Connections.

Installation of storm sewer connections shall comply with all the requirements set forth herein for the installation of the sewer main, including excavation, backfilling, bedding, tracer wire, laying and jointing the sewer pipe. Storm sewer connections shall be made of six (6) inch Schedule 40 PVC pipe or twelve (12) inch SDR-35. Storm sewer connections shall be laid with a minimum grade of one-fourth (1/4) inch per foot, any variations from these standards shall be approved in writing from either the Engineer or a City Plumbing Inspector. The depth of proposed or reconstructed storm sewer connections at the property line shall be a minimum of four (4) feet, when written approval from the Engineer has been granted, with an optimum depth between five (5) feet and six (6) feet. Where connections are to be connected to risers the Contractor shall furnish and install the required fittings.

For the installation of new connection in the public right-of-way, unless otherwise specified in the plans or directed by the Engineer, the size of a newly constructed storm sewer connection to be installed between the public storm sewer main and the property line shall be six (6) inches in diameter. The Engineer may require the size of the connection to be twelve (12) inches or greater depending on the lot size or proposed land use.

D. Storm Sewer Reconnect.

Reconnect shall include reconstructing storm sewer connections that shall be reconnected to the storm sewer main. The gravel backfill and bedding required for the reconnection are included in this item. The Contractor shall be responsible for maintaining the normal flow of water during reconnection of the connections.

For the reconstruction, repair or replacement of storm sewer connections in the public right-of-way, unless otherwise specified in the plans, when a portion of a storm sewer connection in the public right-of-way is to reconstructed, repaired or replaced, the inside diameter of the new connection to be installed shall match that of the connection which is being replaced. All new connections shall be a minimum of six (6) inches in diameter. Under no circumstances shall the new connection be smaller than the existing. For purposes of this requirement, all five (5) inch connections shall be considered to be six (6) inches in diameter. It shall not be permissible, in any event, to decrease the diameter of a storm sewer connection in the direction of flow.

Where a storm sewer connection is being re-laid in the public right-of-way and bends are required to reconnect the new connection to the ends of the existing connection or sewer main, the Contractor may use standard PVC bends that provide a change in the direction of flow of twenty-two and a half (22.5) degrees or less. Bends placed in a connection shall be separated by straight pieces of pipe such that any two bends are separated by a distance of two (2) feet or more, measured from the center of each bend. The use of forty-five (45) degree bends shall be allowed only in connecting to a forty-five (45) degree wye at the sewer main in order to orient the connection perpendicular to the sewer main.

For connections that are in close proximity to terrace trees (as determined by the Engineer), the situation shall be reviewed on a case by case basis by the Engineer and the City Forester. The Contractor shall use construction methods and equipment to minimize tree damage as directed by the Engineer. In extreme cases the Engineer may elect to terminate connection installation prior to conflict with the tree.

Where a connection is being re-laid in the public right-of-way and connected to pipes of differing materials and/or sizes, standard flexible couplings shall be used. The couplings to be used shall provide for a tight fit around the outside diameter of each pipe and shall be securely fastened with two stainless steel clamps at each pipe end. Couplings which reduce the pipe cross sectional area in the direction of the flow shall not be allowed.

Property owners may have laid a storm lateral to the property line or have plans (indicated by a permit in the window) to place a lateral. The Contractor shall then construct the new lateral from a point at the right-of-way to the storm sewer main, including connecting to the storm lateral if already provided by the property owners. Removal and saw cutting of sidewalk shall be considered incidental to the cost of the connection.

E. Storm Sewer Wyes or Tees.

Unless otherwise specified, the openings in the wyes or tees for connections and riser pipes shall be of the same size as the storm sewer connection to be installed. In the event that a storm sewer connection is not being installed concurrent with the wye or tee, the size of the wye or tee shall meet the sizing requirements set forth for storm sewer connections in Subsections 415.3(c) and 415.3(f) of these Specifications.

At the discretion of the Engineer, the use of saddle type wyes installed along with the sewer connection construction may be permitted when the sewer main is constructed of Poly-Vinyl Chloride (PVC) sewer pipe. All saddle type wyes for Poly-Vinyl Chloride (PVC) sewer pipe installations shall be manufacturer's approved and shall be attached to the sewer main with solvent cement and two stainless steel clamps.

Wye or tee openings, except those that are to be used for riser connections, shall be closed with watertight covers of the same material as the wye or tee, well cemented in.

Main line sewer construction shall be halted by the Engineer if wyes or tees corresponding to connections on the plans are not supplied by the pipe supplier. Tees constructed in the field will not be allowed unless approved by the Engineer. When field tapped connections are allowed, the tap will be core drilled and a saddle or Inserta-Tee adaptor shall be utilized also. The Contractor shall make sure that the lateral does not extend into the mainline sewer. Field taps will not be allowed on mainline sewer pipe diameters of less than eighteen (18) inches. Field tapping of mainline sewers with pipe diameters twenty-one (21) inches or greater will have the tapping pipe being a minimum of two (2) pipe diameters smaller than the main to be allowed and must be approved by the Engineer.

F. Storm Sewer Risers.

Unless otherwise specified, the riser pipes shall be of the same size and material as the storm sewer connection to be installed. In the event that a storm sewer connection is not being installed coincident with the riser pipe, the size of the riser pipe shall meet the sizing requirements set forth for storm sewer connections in Subsections 415.3(c) and 415.3(f) of these Specifications.

The storm riser shall be constructed vertical for the first six (6) feet with a bell-to-bell connection at the main with a short nipple between the bells to secure the connection. At the top of the vertical riser a forty-five (45) degree bend shall be placed with a straight piece of pipe to be extended to the desired elevation within the road right-of-way. The top of riser pipes shall be brought to a point between five (5) and eight (8) feet below the proposed finished street grade with the end of the lateral at the property line being approximately five (5) feet below finished sidewalk elevations. The upper end of all risers and laterals shall be sealed watertight with covers glued on.

For those instances in which a storm connection is not being installed coincident with the riser pipe, a vertical reinforcing rod, one-half (1/2) inch in diameter, shall be strapped to the riser pipe and extended to within eighteen (18) inches of the proposed finished street grade for the case of future location by the City. In backfilling the trench, special care must be used at the location of riser pipes to tamp the backfill material about the entire length of the risers in such a way as to maintain them in a vertical position and not to disturb them.

The depth of the proposed or reconstructed storm sewer lateral at the property line shall be a minimum of four (4) feet, when written approval from the Engineer has been granted, with an optimum depth between five (5) feet and six (6) feet or a minimum one (1) percent slope from the storm main.

G. Storm Sewer Inlet Leads.

Unless otherwise specified in the plans or special provisions, all inlet leads shall be either twelve (12) inch RCP or PVC pipe.

H. Underdrain for Inlets.

Unless otherwise specified in the plans or special provisions, all new and reconstructed inlets shall be constructed with underdrain. Underdrains shall be constructed of 6” perforated PVC wrapped in fabric.

I. Joints.

The joint ties shall be installed in accordance with the Standard Detail Drawing.

The following outlines specifications for new pipe to new pipe and new pipe to existing pipe connections.

<u>New Pipe to New Pipe.</u>

Jointing materials shall conform to the requirements specified in Section 413 – Sewer Pipe Materials of these Specifications, for the type of pipe being installed.

Joints shall not be made until the pipe is in the trench and set to true line and grade. Lengths of pipe which are joined together outside of the trench shall be removed from the project immediately. Prior to making joints, the jointing surfaces shall be inspected for chips, cracks, or other defects in the joints and jointing materials. The jointing surfaces shall be carefully cleaned and lubricated with a vegetable lubricant or a lubricating adhesive. Lubricant shall be applied to both the bell and spigot surfaces of the joint. The lubricant shall be that recommended by the gasket manufacturer for the particular type of gasket being installed.

Care shall be taken when shoving or pulling the pipes together in order not to damage the pipe or the joints and jointing materials. The pipes shall be in proper alignment and to the proper grade prior to applying the pressure necessary to make the joint.

Rubber gaskets for reinforced concrete storm sewer pipe shall be assembled as follows:

No gaskets that show signs of deterioration, such as surface cracking or checking, shall be installed in a pipe joint. The neoprene gaskets used, when the air temperature is ten degrees Fahrenheit (10°F) or lower shall be warmed to temperature of sixty degrees Fahrenheit (60°F) for a period of thirty (30) minutes before being placed on the pipe.

The temperature referred to pertains to the prevailing air temperature at the point of application of the gaskets. This shall be taken to mean the air temperature, either indoor or outdoor, at the time and place the gaskets and cement are being applied to the pipe. It does not refer to the temperature in the trench, or of the bonding cement, or of the pipe.

In making mechanical joints, the bolts shall be installed with the heads in reverse direction. The nuts shall be turned on only as far as they can be by using the wrench with one hand, with no extensions on the wrench to give greater leverage. Care shall be taken not to over-tighten the bolts. The bolts shall be tightened equally and diametrically in order to apply the proper pressure on the gasket and joint.

For HDPE all pipe to pipe connections shall be gasket. The pipe lengths shall be connected using a gasket integral bell and spigot joint. The spigot end of the pipe shall be furnished with a factory installed profile rubber O-ring gasket meeting the specifications of ASTM F-477. All pipe joints shall meet the laboratory testing requirements of ASTM D-3212. The manufacture upon request shall supply independent laboratory certifications documenting that the product shipped has meet the requirements of ASTM D-3212. The pipe shall be shipped with a removable wrap to protect the gasket. Lubrication shall be applied to the joint prior to pushing the bell into the gasket. At least three (3) corrugations of the spigot end must insert into the bell end of the pipe. New manholes shall be constructed with an A-Lok gasket or approved equal

<u>New Pipe to Existing Pipe.</u>

A concrete collar, PVC coupling or compression style coupling shall be required at the junction of a new pipe to an existing pipe as specified on the plan set or as required in the field by the Engineer. The joints shall be clean and may require saw cutting the existing pipe for a clean edge. If the Contractor for his/her convenience deems it more suitable to remove the existing pipe to a full joint, the additional pipe required to connect the new pipe is to be the Contractors responsibility and shall not be compensated.

The concrete collar shall be constructed per the Standard Detail Drawing for Concrete Collar and may include a change in horizontal or vertical direction. The compression coupling shall be constructed per the Standard Detail Drawing for Coupling Detail and shall not include a horizontal or vertical defection between the two pipes.

Spot Repair

Unless otherwise noted on the plans or approved by the Engineer, a spot repair shall consist of the damaged section of pipe being completely removed and replaced with pipe and connections complying with these special provisions and the plans.

415.4 Measurement and Payment

Storm Sewer Pipes.

Storm sewers shall be measured to the nearest tenth of a foot for each of the various types, classes and sizes of pipe installed at the various depths, measured along the centerline of the pipe center to center of junctions and fittings. The quantity to be paid for does not include the lengths of apron endwalls and construction through manholes, catch basins, inlets and other structures. There shall be no deductions from the measured lengths for the installations of wyes, tees, angle-sections and special sections required to join pipes of dissimilar sizes, shapes and types.

The contract price shall include all materials necessary to perform the work, including fittings and accessories, but not including apron endwalls; excavation of the trench; installation and removal of sheeting and bracing; disposal of surplus material from the trench; backfilling the trench and compaction of the backfill material; embankment over the sewer using surplus material from the excavation of the trench; bedding the pipe; laying the pipe and installing the fittings, tracer wire; accessories, wyes, tees, angle-sections and special sections; jointing and sealing of joints in pipe, fittings, wyes, tees, angle-sections and special sections; encasement, where specified; connections to new or existing structures; cleaning out the sewer; restoring the site; and all other work incidental to the installation of storm sewers.

Storm Sewer Connections.

Connections.

Storm sewer connections shall be measured by length in feet of each of the various types, classes and sizes of pipe installed, measured along the centerline of the pipe from the wye opening to the end of the connection pipe, or from the top of the riser to the end of the connection pipe, whichever the case may be.

The contract price shall include furnishing all materials, including required fittings where connections are connected to risers, necessary to perform the work; excavation of the trench; installation and removal of sheeting and bracing; backfilling the trench; and compaction of the backfill material; bedding the pipe; laying the pipe and installing the fittings; jointing and sealing of joints in pipe and fittings; encasement, where specified; cleaning out the connection; restoring the site; and all other work incidental to the installation of sanitary sewer connections.

Where the water service is installed in the same trench as the storm sewer connection, the Contractor shall backfill the storm sewer connection trench to the proper elevation for the installation of the water service; after installation of the water service, the Contractor shall complete the backfilling of the trench, all at no extra cost to the City. The labor, materials and tools necessary to make the taps, lay the water services and set the valve boxes shall be furnished by either the Water Utility or the Contractor, as specified in the contract.

Reconnect.

Reconnect shall be measured and paid as each reconstruction is completed and accepted and shall include necessary wyes or fittings and PVC pipe, 6" or larger, for the connection of the connection and shall not exceed a length of five (5) feet. Storm laterals that are re-laid, the first five (5) feet will be paid for as a reconnect and the remainder of the storm lateral shall be paid by the lineal foot.

The contract price for re-laid connections shall include furnishing all materials, including required fittings where connections are connected to risers, necessary to perform the work; excavation of the trench; installation and removal of sheeting and bracing; backfilling the trench; and compaction of the backfill material; bedding the pipe; laying the pipe and installing the fittings; tracer wire, jointing and sealing of joints in pipe and fittings; encasement, where specified; cleaning out the connection; restoring the site; and all other work incidental to the installation of sanitary sewer connections.

Storm Sewer Risers.

Storm sewer risers shall be measured by length in vertical feet of each of the various types and sizes installed, measured from the wye or tee opening to the top of the riser.

The contract price shall include furnishing all materials, including fittings, necessary to perform the work; including any additional excavation required; special backfilling precautions as required; and all other work incidental to the installation of risers.

By-pass Pumping.

Water control shall be considered incidental to the cost of, constructing, repairing or reconstructing storm sewer.

The City will pay for measured quantities at the contract unit price under the following bid item:

ITEM #	DESCRIPTION	UNIT
415.01	Construct - 8" Storm Sewer	LF
415.02	Construct - 10" Storm Sewer	LF
415.03	Construct - 12" Storm Sewer	LF
415.04	Construct - 15" Storm Sewer	LF
415.05	Construct - 18" Storm Sewer	LF
415.06	Construct - 21" Storm Sewer	LF
415.07	Construct - 24" Storm Sewer	LF

415.08	Construct - 27" Storm Sewer	LF
415.09	Construct - 30" Storm Sewer	LF
415.10	Construct - 36" Storm Sewer	LF
415.11	Construct - 42" Storm Sewer	LF
415.12	Construct - 48" Storm Sewer	LF
415.13	Construct - 54" Storm Sewer	LF
415.14	Construct - 60" Storm Sewer	LF
415.15	Construct - 66" Storm Sewer	LF
415.16	Construct - 72" Storm Sewer	LF
415.17	Construct - 84" Storm Sewer	LF
415.18	Construct 14" x 23" Elliptical	LF
415.19	Construct 19" x 23" Elliptical	LF
415.20	Construct 24" x 38" Elliptical	LF
415.21	Construct 29" x 45" Elliptical	LF
415.22	Construct 34" x 53" Elliptical	LF
415.23	Construct 38" x 60" Elliptical	LF
415.24	Construct 43" x 68" Elliptical	LF
415.25	Construct 48" x 76" Elliptical	LF
415.26	Construct 53" x 83" Elliptical	LF
415.27	Construct 58" x 91" Elliptical	LF
415.28	Construct 63" x 98" Elliptical	LF
415.29	Construct 68" x 106" Elliptical	LF
415.30	Construct - 6" Perforated Wrapped Underdrain	LF
415.31	Construct - 12" Storm Inlet Lead	LF
415.32	Construct - 15" Storm Inlet Lead	LF
415.33	Construct - 18" Storm Inlet Lead	LF
415.34	Construct 6" Storm Lateral	LF
415.35	Construct 12" Storm Lateral	LF
415.36	Remove & Relay - 8" Storm Sewer	LF
415.37	Remove & Relay - 10" Storm Sewer	LF
415.38	Remove & Relay - 12" Storm Sewer	LF
415.39	Remove & Relay - 15" Storm Sewer	LF
415.40	Remove & Relay - 18" Storm Sewer	LF
415.41	Remove & Relay - 21" Storm Sewer	LF
415.42	Remove & Relay - 24" Storm Sewer	LF
415.43	Remove & Relay - 27" Storm Sewer	LF
415.44	Remove & Relay - 30" Storm Sewer	LF
415.45	Remove & Relay - 36" Storm Sewer	LF
415.46	Remove & Relay - 42" Storm Sewer	LF
415.47	Remove & Relay - 48" Storm Sewer	LF
415.48	Remove & Relay - 54" Storm Sewer	LF
415.49	Remove & Relay - 60" Storm Sewer	LF
415.50	Remove & Relay - 66" Storm Sewer	LF
415.51	Remove & Relay - 72" Storm Sewer	LF

415.52	Remove & Relay - 84" Storm Sewer	LF
415.53	Remove & Relay 14" x 23" Elliptical	LF
415.54	Remove & Relay 19" x 23" Elliptical	LF
415.55	Remove & Relay 24" x 38" Elliptical	LF
415.56	Remove & Relay 29" x 45" Elliptical	LF
415.57	Remove & Relay 34" x 53" Elliptical	LF
415.58	Remove & Relay 38" x 60" Elliptical	LF
415.59	Remove & Relay 43" x 68" Elliptical	LF
415.60	Remove & Relay 48" x 76" Elliptical	LF
415.61	Remove & Relay 53" x 83" Elliptical	LF
415.62	Remove & Relay 58" x 91" Elliptical	LF
415.63	Remove & Relay 63" x 98" Elliptical	LF
415.64	Remove & Relay 68" x 106" Elliptical	LF
415.65	Remove & Relay - 12" Storm Inlet Lead	LF
415.66	Remove & Relay - 15" Storm Inlet Lead	LF
415.67	Remove & Relay - 18" Storm Inlet Lead	LF
415.68	Remove 8"/10" & Relay w/ 12" Inlet Lead	LF
415.69	6" Storm Reconnect	EACH
415.70	6" Storm Reconnect	LF
415.71	12" Storm Reconnect	EACH
415.72	12" Storm Reconnect	LF
415.73	6" Storm Riser	VF
415.74	12" Storm Riser	VF
415.75	5' - 12" Storm Spot Repair	EACH
415.76	10' - 12" Storm Spot Repair	EACH
415.77	15' - 12" Storm Spot Repair	EACH
415.78	20' - 12" Storm Spot Repair	EACH
415.79	5' - 15" Storm Spot Repair	EACH
415.80	10' - 15" Storm Spot Repair	EACH
415.81	15' - 15" Storm Spot Repair	EACH
415.82	20' - 15" Storm Spot Repair	EACH
415.83	5' - 18" Storm Spot Repair	EACH
415.84	10' - 18" Storm Spot Repair	EACH
415.85	15' - 18" Storm Spot Repair	EACH
415.86	20' - 18" Storm Spot Repair	EACH
415.87	5' - 21" Storm Spot Repair	EACH
415.88	10' - 21" Storm Spot Repair	EACH
415.89	15' - 21" Storm Spot Repair	EACH
415.90	20' - 21" Storm Spot Repair	EACH
415.91	5' - 24" Storm Spot Repair	EACH
415.92	10' - 24" Storm Spot Repair	EACH
415.93	15' - 24" Storm Spot Repair	EACH
415.94	20' - 24" Storm Spot Repair	EACH
415.95	5' - 27" Storm Spot Repair	EACH
415.96	10' - 27" Storm Spot Repair	EACH
415.97	15' - 27" Storm Spot Repair	EACH

415.98	20' - 27" Storm Spot Repair	EACH
415.99	5' - 30" Storm Spot Repair	EACH
415.100	10' - 30" Storm Spot Repair	EACH
415.101	15' - 30" Storm Spot Repair	EACH
415.102	20' - 30" Storm Spot Repair	EACH

SECTION 416

STORM SEWER TRASH GRATES

416.1 General

Storm Sewer Trash Grates shall include steel grates to be installed on reinforced concrete pipe or metal apron endwalls, reinforced concrete or metal elliptical pipe apron endwalls, and any day lighted inlet or outlet pipes 12" or larger that connects to the storm sewer system as specified in the plans.

416.2 Materials

A. Storm Sewer Trash Grates:

All day lighted pipe 12 inches in diameter and over must have screened inlets with vertical bars 4 inches center to center and a horizontal bar across the midpoint. Both vertical and horizontal bars shall be No. 2 bars for 12 inch to 24 inch pipe and No. 4 bars for pipe larger than 24 inch. All bars shall be welded to a ¼" inch by 1½" steel strap and anchored to the pipe with anchor bolts (6 inch or 12 inch). Three (3) anchor bolts shall be used on 12 inch to 24 inch pipe and four anchor bolts are required for larger than 24 inch pipe.

All Storm Sewer Trash Grates shall be painted as specified in Structural Steel Paint-Epoxy System.

B. Structural Steel Paint-Epoxy System:

The following paint system shall be used on all Storm Sewer Trash Grates. At the discretion of the Contractor, a galvanized storm sewer gate may be provided. The galvanized gate shall conform to the specifications of the State of Wisconsin Standard Specifications for Highway and Structure Construction.

The Epoxy System shall consist of a prime or shop coat of organic or inorganic zinc-rich paint, an intermediate shop coat of high-build epoxy paint and a protective shop coat of urethane paint.

Structural steel which is to be welded shall not be coated before welding is complete. If it is to be welded only in the fabricating shop and subsequently erected by bolting, it shall be given one coat of weldable primer or other approved protective coating after shop welding and shop fabrication is completed.

<u>Coating System</u>

The Contractor shall select a complete coating system. The color of the epoxy shall be white and the urethane coating materials shall be a dark green. The Contractor shall supply the Engineer with the product data sheets before any coating is applied. The product data sheets shall indicate the mixing and thinning directions, the recommended spray nozzles and pressures, the minimum drying time for shop applied coats, the recommended procedures for painting zinc coated bolts, nuts and washers, the telephone number for technical service and other pertinent information.

Organic or Inorganic Zinc Rich Primer

After the entire surface to be coated has been cleaned and approved by the Inspector, the primer shall be applied so as to produce a uniform even coating bonded to the metal

The color of the primer must be such that a definite contrast, which is readily apparent, exists between it and the color of the blasted surface. The fabricator will be required to submit color samples of the primer to the Engineer for approval.

All areas shall have a minimum dry film thickness above the surface profile 0.076 mm (3.0 mils).

If the application of the coating at the required thickness in one coat produces runs, bubbles or sags, the coating shall be applied in two, wet, even coats using a fifty (50) percent overlap with minimum dry or overspray. Where excessive coating thickness produces mud-cracking, such coating shall be removed back to soundly bonded coating and the area recoated to the required thickness.

In areas of deficient primer thickness, the areas shall be cleaned thoroughly with power washing equipment as necessary to remove all dirt; the areas then shall be brushed with a non-rusting tool, vacuumed and recoated.

Epoxy System (Intermediate and Protective Coats)

On all areas the white intermediate coat shall have a minimum dry film thickness of 0.089 mm (3.5 mils) and the protective coat shall have sufficient thickness to provide a uniform color and appearance, but in no case less than 0.025 mm (1.0 mils).

416.3 Construction Methods

Animal Grates shall be bolted on the top to prevent easy access to sewer.

Reinforced concrete endwalls shall be tied back to the three (3) upstream pipe sections. The contractor shall follow the manufacture's recommendations for the tie back.

416.4 Measurement and Payment

ITEM #	DESCRIPTION	UNIT
416.01	Trash Grate	EACH

SECTION 417

SEWER TRACER WIRE

417.1 General

Tracer wire shall be installed on all non-conductive sanitary sewer pipe, lateral pipe, storm sewer pipe, inlet lead pipe, mini-storm sewer pipe, and underdrain pipe to be constructed or re-laid.

The tracer wire shall be securely attached to the sewer pipes and terminated at the surface.

417.2 Materials

Tracer wire shall be a continuous, single-strand # 10 or #12 AWG copper wire with a continuous coating of polyethylene insulation suitable for direct burial in wet locations.

Tracer wire on sanitary sewer and laterals shall have green colored insulation. Tracer wire on storm sewer, storm sewer laterals, inlet lead, mini-storm sewer, and underdrain pipe shall have brown colored insulation.

Tracer wire access boxes shall be a Valvco Type SEWAB, Bringham & Taylor P200 NFG Test, or an approved equal.

417.3 Construction Methods

Tracer wire main run shall be continuous from manhole to manhole. Branch tracer wire splice connections shall be a typical Western Union-type solder splice made by stripping the coating off the main run tracer wire and then tightly wrapping the branch tracer wire around the main run tracer wire a minimum of 8 times. Both wire splices would then be soldered with a self-flux, 50-50 rosin core solder and tightly wrapped with 1 ½" wide by 3.2mm 3M Scotchfill™ electrical insulation tape, or equivalent, then coated with 3M Scotchkote™ electrical coating, or equivalent so that no copper wire is exposed. A stripping tool shall be used to remove the plastic coating on the wire. The Contractor shall be responsible to have all the correct types of tools necessary to install the tracer wire materials as specified above and to ensure that the tools are in good working order.

The tracer wire shall be securely attached to the top of all non-conductive sewer pipes specified above, within six (6) inches of each end of the pipe, and at equally spaced locations with a maximum spacing of six (6) feet. Any exposed copper wire shall be sealed and covered with materials approved by the Engineer.

Tracer wire at the downstream end of any lateral or lead that connects directly to the sewer main shall be connected to the tracer wire on the sewer main using a branch connection splice or a slip bolt. The slip bolt shall be brass with an 8 solid capacity. The splice shall then be tightly wrapped with 1-1/2" wide by 3.2 mm 3M Scotchfill™ electrical insulation tape, or equivalent, then coated with 3M Scotchkote™ electrical coating, or equivalent, so that no copper wire is exposed.

The tracer wire shall be brought up the outside of each manhole and inserted into the manhole through the pick hole in the cone of the structure. If the cone has no pick holes, the contractor may saw a small notch in the top of the cone for tracer wire placement. The tracer wire shall then be attached to the inside of the structure, within four (4) inches below the top of the cone using a method approved by the Engineer. The tracer wire shall have two (2) feet of excess wire to allow for future adjustment.

Tracer wire at the upstream end of an inlet lead shall be brought around the back of the storm sewer inlet structure and inserted a minimum of six (6) inches into the storm inlet through the curb head of the inlet casting. The tracer wire shall have an eighteen (18) inch loop at the back of the inlet structure to allow for future adjustment.

Laterals

New Developments

Tracer wire at the upstream end of laterals shall be brought to the surface at the right-of-way perpendicular to the end of the lateral and shall be securely attached to the top of a sixty (60) inch long, treated two by four (2x4). The top of the two by four shall be placed such that eighteen (18) inches extend above finished grade.

Existing Lawn or Paved Terrace Area

In areas where the main line pipe has tracer wire, tracer wire at the upstream end of a lateral shall be securely attached to the end of the pipe using a method approved by the Engineer, with a minimum of two (2) feet of excess wire.

In areas where the main line pipe has no tracer wire and the lateral from the house has no existing tracer wire, tracer wire at the up-stream end of a lateral shall be brought to the surface at the end of the pipe installation and securely attached to a tracer wire box as specified by the manufacturer. The top of the tracer access wire box shall be placed at existing ground elevation in existing lawn areas and in paved surfaces. It will be the responsibility of the following pavement Contractor to make final adjustments.

Tracer Wire Circuit Testing

After the Contractor has completed all sewer pipeline installation on the project, the Contractor will test the electrical continuity of all tracer wire installations on the project under the observation of the Engineer. The Contractor shall be responsible for all costs of any repairs that may be required to establish the electrical continuity of the tracer wire circuit.

417.4 Measurement and Payment

The cost of furnishing and installing all tracer wire materials shall be included in the unit bid price of the sewer facility being installed.

SECTION 418

CULVERT PIPES

418.1 General

Perform work in accordance with the provisions of WisDOT Standard Specifications for Highway and Structure Construction Section 520, 521 and 522 except as hereinafter modified.

418.2 Materials

Vacant

418.3 Construction Methods

Vacant

418.4 Measurement and Payment

Reinforced Concrete Culvert Pipes (RCCP)

The City will pay for measured quantities at the contract unit price under the following bid items:

ITEM #	DESCRIPTION	UNIT
418.01	Culvert Pipe Class III, Corrugated Steel 12"	LF
418.02	Culvert Pipe Class III, Corrugated Steel 18"	LF
418.03	Culvert Pipe Class III, Corrugated Steel 24"	LF
418.04	Culvert Pipe Class III, Corrugated Steel 30"	LF
418.05	Culvert Pipe Class III, Corrugated Steel 36"	LF
418.06	Culvert Pipe Class III, Corrugated Steel 42"	LF
418.07	Culvert Pipe Class III, Corrugated Steel 48"	LF
418.08	Culvert Pipe Class III, Corrugated Steel 54"	LF
418.09	Culvert Pipe Class III, Corrugated Steel 60"	LF
418.10	Culvert Pipe Class III, Corrugated Steel 72"	LF
418.11	Apron Endwalls for Culvert Pipe Class III, Steel 12"	EACH
418.12	Apron Endwalls for Culvert Pipe Class III, Steel 18"	EACH
418.13	Apron Endwalls for Culvert Pipe Class III, Steel 24"	EACH
418.14	Apron Endwalls for Culvert Pipe Class III, Steel 30"	EACH
418.15	Apron Endwalls for Culvert Pipe Class III, Steel 36"	EACH
418.16	Apron Endwalls for Culvert Pipe Class III, Steel 42"	EACH
418.17	Apron Endwalls for Culvert Pipe Class III, Steel 48"	EACH
418.18	Apron Endwalls for Culvert Pipe Class III, Steel 54"	EACH
418.19	Apron Endwalls for Culvert Pipe Class III, Steel 60"	EACH
418.20	Apron Endwalls for Culvert Pipe Class III, Steel 72"	EACH
418.21	RCCP Class III, 12"	LF
418.22	RCCP Class III, 18"	LF

418.23	RCCP Class III, 24"	LF
418.24	RCCP Class III, 30"	LF
418.25	RCCP Class III, 36"	LF
418.26	RCCP Class III, 42"	LF
418.27	RCCP Class III, 48"	LF
418.28	RCCP Class III, 54"	LF
418.29	RCCP Class III, 60"	LF
418.30	RCCP Class III, 72"	LF
418.31	Apron Endwalls for RCCP Class III, 12"	EACH
418.32	Apron Endwalls for RCCP Class III, 18"	EACH
418.33	Apron Endwalls for RCCP Class III, 24"	EACH
418.34	Apron Endwalls for RCCP Class III, 30"	EACH
418.35	Apron Endwalls for RCCP Class III, 36"	EACH
418.36	Apron Endwalls for RCCP Class III, 42"	EACH
418.37	Apron Endwalls for RCCP Class III, 48"	EACH
418.38	Apron Endwalls for RCCP Class III, 54"	EACH
418.39	Apron Endwalls for RCCP Class III, 60"	EACH
418.40	Apron Endwalls for RCCP Class III, 72"	EACH
418.41	Elliptical RCCP Class HE-III (size)	LF
418.42	Elliptical Apron Endwall for RCCP (size)	EACH
418.43	Concrete Collar	EACH

SECTION 419

SEWER STRUCTURES

419.1 General

Perform work in accordance with the provisions of WisDOT Standard Specifications for Highway and Structure Construction Section 611 except as hereinafter modified.

Work under this section shall apply to manholes, catch basins and inlets for sanitary and storm sewer connections.

Inlet and discharge elevations for manholes, catch basins and inlets as indicated on the plans will be subject to revisions as may be necessary to fit field conditions and that the Engineer reserves the right to increase or decrease the depth of manholes, catch basins and inlets in order to adjust their inlet or discharge elevations. No additional compensation will be made for this adjustment except as provided for under basis of payment.

419.2 Materials

Castings

A. General.

Gray iron castings used in the work shall conform to the requirements of the Specifications for Gray Iron Castings, ASTM A 48, Class 30.

The castings for manholes, catch basins, and inlets shall be in accordance with the designs, dimensions, and details shown on the Standard Detail Drawings for the installation named, unless otherwise specified. Frames and covers for manholes and catch basins shall be machined and fitted so that rocking and chattering will be eliminated. The covers installed on sanitary sewers shall have the self-sealing gaskets firmly attached, glued in place at the factory.

B. Manholes.

The following lists of Neenah Foundry castings are acceptable for City construction and are further detailed in the Standard Detail Drawings. Substitutions shall be approved by the Engineer prior to delivery to the job site.

1.	R-1500	Heavy-duty, eight (8) inch high, non-rocking manhole frame and R-1710 Type “B” non-rocking self-sealing manhole covers with concealed pick holes for sanitary covers and open pick holes for storm covers. A R-2100 Type “A”, non-rocking slotted grate will be used if the casting is to provide for storm water drainage.

2. R-1510-A — Heavy-duty, six (6) inch high, non-rocking manhole frame and Type "B" non-rocking self-sealing manhole covers with concealed pick holes for sanitary covers and open pick holes for storm covers. A R-2100 Type "A", non-rocking slotted grate will be used if the casting is to provide for storm water drainage.

3. R-1689 — Heavy-duty, four (4) inch high, non-rocking manhole frame and R-1550 Type "B" non-rocking self-sealing manhole covers with concealed pick holes for sanitary covers and open pick holes for storm covers. A R-2050 Type "D", non-rocking slotted grate will be used if the casting is to provide for storm water drainage.

4. R-1916-D — Heavy-duty, manhole frame and self-sealing T-Gasket bolt down cover and frame.

C. Inlets.

The following lists of Neenah Foundry castings are acceptable for City construction and are further detailed in the Standard Detail Drawings. Substitutions shall be approved by the Engineer prior to delivery to the job site.

1. R-3067 — Heavy-duty curb inlet frame, curb box with two (2) inch radius, and diagonal openings grate (Neenah Foundry Type R Inlet Grate). May be used with vane grate (Neenah Foundry Type V Inlet Grate) denoted with a –V when specified on the Plans.

2. R-3070 — Heavy-duty curb inlet frame, slanted curb box with openings, and diagonal openings grate (Neenah Foundry Type R Inlet Grate). May be used with vane grate (Neenah Foundry Type V Inlet Grate) denoted with a –V when specified on the Plans.

3. R-3501-TR/TL — Heavy-duty curb inlet frame and directionally vaned grates for rolled faced curbs. TR is for drainage flows coming from the right and TL is for drainage flows coming from the left.

D. Alley, Parking Lot, Yard Drains, and Catch Basins

The following lists of Neenah Foundry castings are acceptable for City construction and are further detailed in the Standard Detail Drawings. Substitutions shall be approved by the Engineer prior to delivery to the job site. Neenah R-2560 Type "E" Beehive cover only to be used where specified or shown on the plans or where approved by the Engineer.

1. R-1500 — Heavy duty, eight (8) inch high, non-rocking frame and R-2100 Type "A", non-rocking slotted grate.

2. R-2560-E — Heavy duty, eight and seven-eighths (8-7/8) inch high frame (Neenah Foundry R-1550-A) and beehive grate (Neenah Foundry R-2560-E).

419.3 Construction Methods

A. General.

The construction of concrete manholes, catch basins, and inlets shall conform to the pertinent portions of these Specifications, and the applicable Standard Detail Drawings for the structure involved. Manholes, catch basins and inlets shall be of a size and type specified in the contract, and shall be constructed at the location and to the elevation shown on the plans, or as directed by the Engineer.

Unless otherwise specified, all sanitary manholes shall be constructed of precast units of reinforced concrete provided they meet all the precast requirements in Subsection 419.3(b). Manholes and inlets for storm sewers shall be precast concrete structures. Cored concrete blocks will not be allowed. If the plans specifically require a field poured structure, then the structure shall be cast-in-place with no exception. If the structure is not specifically required to be field poured, a precast structure may be substituted for a cast-in-place structure provided they meet all the precast requirements and approval is granted by the Engineer.

All manholes, inlets, and catch basins constructed shall be a minimum of 6’ in depth, from the finished rim grade to the base of the structure.

Flat top manholes shall be constructed so the lid is below the proposed aggregate base. Flat manhole tops shall be constructed with a recessed ring to accommodate adjusting ring placement as shown in the detail drawings.

Cast-in-place structures shall be constructed as detailed in the standard detail drawings. The bases of all structures which are cast-in-place shall be casted prior to casting the walls of the structures, unless otherwise ordered or allowed by Engineer.

Various layout requirements for storm sewer inlets are included in standard detail drawings.

The Engineer shall review shop drawings, which have been reviewed and approved by the Contractor for all new manholes, catch basins and inlets. Shop drawings shall be submitted to the Engineer no later than the pre-construction meeting. The Engineer shall have five (5) days to review and provide the Contractor with any required changes or modifications. The Contractor shall make the required changes at no additional cost. If there are no required changes or modifications, the Engineer will place the shop drawings on file. Since the Shop drawings are reviewed and approved by the Contractor, the Engineer will not be responsible for any missed changes or modifications required when adequate information was provided in the contract documents and/or plans.

All new or replaced manholes, pre-cast or cast-in-place shall be constructed without steps. Cutting of steps out of new manhole sections is prohibited. This requirement is for the health and safety of all parties involved with manhole construction, inspection and maintenance.

Reconstruct Manhole – All manholes to be reconstructed shall consist of said manholes being replaced to depth indicated on the plan, including casting replacement.

B. Precast Requirements.

Precast Manholes and inlets, generally referred to as precast structures, shall be of reinforced concrete and shall conform to the specifications of Precast Reinforced Concrete Manhole Sections, ASTM C 478. Joints shall meet the requirements for circular reinforced concrete pipe as specified in these Specifications.

Precast structures of reinforced concrete may be substituted for cast-in-place structures provided they can meet all of the following criteria and the conditions of the contract and approval is granted from the Engineer. No precast structures shall be brought to the job site until approval is granted from the Engineer. Any precast structure not meeting these criteria shall be replaced by a cast-in-place structure or a precast structure satisfying these criteria at the Contractor's expense.

Each pre-cast manhole joint will be sealed with one and a half (1½) inch ring of "Kent-Seal No. 2" or equal, according to the manufacture's specifications around the entire circumference of the joint. The use of poured in place rubber gaskets or other water tight seal can be substituted or used in conjunction with the "Kent-Seal" with prior written approval of the Engineer.

The following precast requirements are specific for sanitary sewer and storm sewer precast structures.

<u>Sanitary Sewer.</u>

The following precast requirements shall be met for all precast manholes for sanitary sewers:

- Spreader bars shall be used if "lift eyes" are utilized for movement and placement of the precast structure.
- Each precast structure on the plan shall be custom manufactured with factory-made cores for sanitary sewer connections.
- The total height of adjustment shall be a minimum of two (2) inches and a maximum of six (6) inches on a manhole with a cone section. The total height of adjustment shall be a minimum of eight (8) inches and a maximum of twelve (12) inches on sanitary manholes with a flat top. All adjustment greater than four (4) inches shall be done with oversized concrete adjustment, securely attached to the structure and made in accordance with Section 420.
- The precast base shall be integral to the precast structure. The invert and bench may be either field poured concrete or precast and shall be such that the invert provides positive flow through the structure and the height of the bench shall match the spring line of the discharge pipe.

A base section with a precast bench and invert may be provided, subject to the following requirements:

- The concrete of all inverts shall be finished with a steel trowel to produce a smooth flowline. Inverts which are brushed and/or have a rough flowline may be rejected by the Engineer in the field.

- The Contractor shall provide for a tight joint between all pipes entering or leaving the structure and the precast invert such that there is no abrupt change in the grade of the flowline through the joint. Any grinding or grouting of the invert which is required to produce a tight joint shall be considered incidental to the installation of the precast structure.
- The precast bench shall extend to a minimum height of ½ the pipe diameter.

- All inlet flowlines shall be poured with gentle sweeps through the structure towards the outlet flowline such that cleaning and televising equipment can pass easily along the flowlines.

Storm Sewer.

The following precast requirements shall be met for all precast manholes for storm sewers:

- Pick holes on a barrel sections with no base shall be utilized with extreme care. Pick holes shall not be utilized as a method to place the bottom sections. Pick holes shall be sealed on the inside and the outside of the precast structure prior to backfilling the excavation.

- Each precast structure on the plan shall be custom manufactured with factory-made cutouts for storm sewer connections. Cutouts shall not extend into the groove of the bottom section or barrel section(s). There shall be a minimum of twelve (12) inches of the inside wall of the precast structure present between the cutouts for the pipes. A minimum of two (2) inches of the precast structure must be present between the top of the knockout and the bottom of the adjustment rings. No removal of the precast structure above the precast knockout will be allowed.

- The total height of adjustment shall be a minimum of two (2) inches and a maximum of six (6) inches on a manhole cone. The total height of adjustment shall be a minimum of eight (2) inches and a maximum of twelve (6) inches storm manholes with a flat top. All adjustment greater than four (4) inches shall be done with oversized concrete adjustment, securely attached to the structure and made in accordance with Section 420.

- The base shall be precast integral to the precast structure. The invert and bench may be either field poured concrete or precast and shall be such that the invert provides positive flow through the structure and the height of the bench shall match the springline of the discharge pipe.

The following requirements are specific to all precast inlets for storm sewers:

- All standard inlets shall be precast 30-inch diameter reinforced concrete.

- All special inlets shall be 24” x 36” rectangular internal dimensions made out of reinforced concrete.
- Pick holes shall be sealed on the inside and outside of the precast inlet prior to backfilling of the excavation.

- The total height of adjustment shall be a minimum of two (2) inches and a maximum of six (6) inches. All adjustment greater than four (4) inches shall be done with oversized concrete adjustment, securely attached to the structure and made in accordance with Section 420.

- The precast base shall be integral to the precast structure. The inlet invert and bench shall then be field poured such that the invert provides positive flow through the structure and the height of the bench matches the invert elevation of the discharge pipe.

- The precast inlet shall be constructed to accept a perforated underdrain out the back of the inlet as specified in Section 415. Where the inlet is located in a driveway or sidewalk, the perforated underdrain will be extended parallel with the curb line to clear the limits of the driveway or sidewalk. The cost of extending the underdrain shall be incidental to the cost of constructing the inlet.

The following requirements are specific to all alley/parking lot drains, catch basins, and yard drains for storm sewers:

- All alley/parking lot/yard drains and catch basins shall be precast 30-inch diameter reinforced concrete unless specified differently on the plans.

- All alley/parking lot/ yard drains and catch basins shall have a minimum depth of six (6) feet.

- Plans will call out required sump depth below outlet of pipe invert for catch basins.

- All alley/parking lot/yard drains shall have flow lines.

C. Castings.

Only those castings designated in the Standard Specifications for castings will be permitted.

All new manholes, inlets and catch basins shall include a new casting as specified. Structures which have been rehabilitated by a cementitious method shall utilize the existing casting. New castings shall be supplied and installed by the Contractor when the structures are partially reconstructed or totally replaced as specified in the Construction Documents.

Existing castings that conform to the Standard Specifications on the job site may be salvaged and reused on new structures for that project as approved by the Engineer. Otherwise, all excess salvaged castings shall be delivered to the City of Green Bay's East Side Operation Facility or stockpiled as the Construction Documents specify.

Salvaged castings shall be brought to the East Side Garage (1820 Mills Street) within one (1) week of removal. Delivery of castings shall be coordinated with the Sewers and Bridge Superintendent, at (920) 391-3635 to set up an appointment for drop off.

Replacement of existing manhole or inlet casting shall be as directed by the Engineer. Any damaged/broken castings observed while performing work outlined in the other bid items shall be brought to the attention of the Engineer.

The old castings shall be salvaged by the Contractor and delivered to the East Side Municipal Garage. If the salvaged casting is not returned within thirty (30) days of obtaining the new casting, the City will charge the Contractor for the cost of a new replacement casting.

D. Sewer Connections.

The connections of new pipes at new structures are detailed in the respective sewer type Sections with the exception of sanitary sewer drop structures which are defined in this Subsection.

When a structure is to be constructed at an existing pipe, the Contractor shall saw cut the existing pipe in the required location to accommodate the placement of the new structure. If the Contractor deems it more suitable to remove the existing pipe to a full joint, the additional pipe and connection required to reconnect the sewer shall be the Contractor's responsibility.

Connections shall be Kor-N-Seal, A-Lok, or Equal for flexible pipe and Mason brick and mortar for rigid pipe.

The following requirements are specific for sanitary sewer and storm sewer connections.

Sanitary Sewer.

Whenever shown on the plans, or directed by the Engineer, the Contractor shall install outside drop structures in conjunction with the installation of sanitary manholes as detailed in the Standard Detail Drawings. The pipe and fittings to be used in the construction of the outside drop inlets shall be of the same material as the sewer main. The pipe and fittings shall be securely anchored to the manhole to prevent displacement during the placement of the concrete encasement. Where allowed, an inside drop may be constructed as detailed in the Construction Documents or when approved prior to construction by the Engineer in writing.

A Sanitary Sewer Tap shall include the connection of an existing main to a new structure. A flexible connector shall be provided and used by the Contractor to connect the existing pipe to any new pipe that is required to make the connection to the structure as detailed in Standard Detail Drawings. Any new pipe that is installed by the Contractor to reconnect the existing sewer main or lateral shall be considered incidental to this bid item. The newly installed pipe shall match the existing pipe's diameter or be of the next larger diameter. The pouring and construction of concrete benches and flow lines in new manholes for the inlet or outlet pipes shall not be considered a part of this work. The construction of concrete benches and flow lines shall be considered incidental to the installation of the manhole. The Contractor shall be responsible for maintaining the normal flow of wastewater during tapping of the manhole.

When a new private connection is being made to the public sanitary sewer system all construction shall comply with these Standard Specifications and the Contractor shall notify the Engineering Department three (3) days in advance of doing the construction to allow an inspection to be scheduled.

Storm Sewer.

A Storm Sewer Tap shall include all work, materials and incidentals required to connect a new pipe of the size and type specified in the contract to an existing structure or pipe. The pipe being used shall be paid separately under the appropriate item. The new connection shall be made in a workmanship like manner to assure the structural integrity of the tapped structure or pipe once the connection is made. A Storm Sewer Tap/Connection shall be completed in accord with the type of pipe material being connected and the type of material being connected to.

Where a new reinforced concrete pipe is being tapped into an existing concrete structure or pipe the connection shall be made in a workmanship like manner to assure the structural integrity of the tapped structure or pipe once the connection is made. A concrete collar is required to complete and seal the connection between the existing structure or pipe and the new pipe. The work completed shall be in accordance with the Standard Detail Drawings.

Where a new plastic pipe is being connected into an existing concrete pipe or concrete structure the contractor shall field core the existing structure or pipe and provide flexible connections to connect the new pipe to the existing pipe or structure as detailed in the Standard Detail Drawings. Where the connection is being made to an existing plastic pipe, a fitting from the manufacture of the existing plastic pipe, shall be utilized. The work under this item shall include all necessary work to provide the field core and all necessary fittings.

When a new private connection is being made to the public storm sewer system all construction shall comply with these Standard Specifications and the Contractor shall notify the Engineering Department three (3) days in advance of doing the construction to allow an inspection to be scheduled.

1. Where any type of pipe is being connected to a horizontal elliptical pipe (HERCP) and that connection is not occurring with matching spring lines, a new structure shall be required for the connection. Further, if the pipe being connected to the existing HERCP has an inside diameter greater than one half the inside vertical diameter of the existing HERCP, a new structure shall be required for the connection.

2. Where any type of pipe is being connected to a box culvert a tap/connection may be utilized. A flexible pipe connection would be required if the connecting pipe is non ridged.

3. The method of connection to existing clay pipe, or any type of pipe not specifically discussed above shall be at the discretion of the Engineer.

E. Remove and Rebuild Manholes.

All precast manholes to be removed and rebuilt shall be re-adjusted to the proper elevation by removing excess adjusting rings and adding to the section of manhole below the salvaged cone and casting. The largest available precast barrel section shall be used to minimize the adjustment between the precast cone and the specified casting. Final adjustment shall be in accordance with Section 420.

F. Remove and Replace Structures.

All structures, including manholes, catch basins and inlets, to be removed and replaced shall consist of the existing structure being totally removed and a new structure replaced, including final adjustment in accordance with Section 420, casting replacement, and all reconnection of all pipes.

G. Reconstruct Structures.

All structures, including manholes, catch basins and inlets, to be reconstructed shall consist of said structure being reconstructed to the height called out on the plan including Kent-Seal and concrete collar at the point of attachment, final adjustment in accordance with Section 420, and casting replacement.

H. Chemical Grout Sanitary Sewer

Chemical Grout shall be Avanti® or equal. The Contractor shall follow the manufacturer's specifications for installation, and the manufacturer's recommendations for grout type.

419.4 Measurement and Payment

A. Sanitary Manholes.

Sanitary manholes shall be measured in vertical feet from the invert of the lowest outlet pipe to the top of the manhole cover of each of the various sizes installed.

The contract price shall include furnishing all materials necessary to perform the work, including castings unless specified to include a salvaged casting, excavation, installation and removal of sheeting and bracing, disposal of surplus material from the excavation, backfilling the excavation and compaction of the backfill material, preparation of the foundation, construction of the structure, including connections, cleaning out the structure, restoring the site, and all other work incidental to the installation of sanitary manholes.

B. Sanitary Drop Structures.

Outside drop structures and inside drop structures shall be measured by length in vertical feet of each inlet pipe installed, measured from the invert of the entry tee to the spring line of the sewer

main. The remainder of the manhole, from the invert on the entry tee to the manhole cover, will be paid as a standard manhole.

The contract price shall include furnishing all materials, including required fittings and accessories, necessary to perform the work; concrete encasement around the drop piping; tying the drop piping to the manhole structure, cleaning out the manhole and drop; and all other work incidental to the installation of outside drop or inside drop manholes.

C. Storm Manholes, Catch Basins and Inlets.

Storm manholes shall be measured in vertical feet from the invert of the lowest outlet pipe to the top of the manhole cover of each of the various sizes installed.

Catch basins and inlets shall be measured separately as units of each of the various types and sizes of each installed.

The contract price shall include furnishing all materials necessary to perform the work, including castings unless specified to include a salvaged casting; excavation; installation and removal of sheeting and bracing; removal of water from the excavation; disposal of surplus material from the excavation; backfilling the excavation; backfilling the excavation and compaction of the backfill material; preparation of the foundation; construction of the structure, reconnection of all existing pipes, connection of new pipes, including connections; cleaning out the structure; restoring the site; and all other work incidental to the installation of storm manholes, catch basins and inlets.

D. Remove and Rebuild Manholes.

The unit price for Remove and Rebuild Manhole is per vertical foot of new manhole barrel and new adjustment sections that was added below the salvaged cone and casting and shall include furnishing all materials necessary to perform the work, including salvaging the existing casting; excavation; installation and removal of sheeting and bracing; removal of water from the excavation; disposal of surplus material from the excavation; backfilling the excavation; backfilling the excavation and compaction of the backfill material; saw cutting existing pavement; removal of excess adjusting rings, construction of the new barrel section, replacing the salvaged cone section; making final casting adjustment in accordance with the Standard Specifications, cleaning out the structure; temporary pavement patching; restoring the site; and all other work incidental to the removal of the excess adjusting rings and the installation of the new barrel section and salvaged cone and casting.

E. Remove and Replace Structures.

The contract unit price per vertical foot shall include furnishing all materials necessary to perform the work, including new castings; excavation; installation and removal of sheeting and bracing; removal of water from the excavation; disposal of surplus material from the excavation; backfilling the excavation; backfilling the excavation and compaction of the backfill material; preparation of the foundation; saw cutting the existing pavement, removal and disposal of the existing structure, construction of the new structure, reconnection of all existing pipes,

connection of new pipes, including connections; making final casting adjustment in accordance with the Standard Specifications, cleaning out the structure; temporary pavement patching; restoring the site; and all other work incidental to the removal of the existing structure and the installation of the new structure.

F. Reconstruct Structures.

The unit price for Reconstruct Manhole, Inlets or Catch Basin is per vertical foot of new structure from the connection of the old structure up to and including the casting. The price shall include furnishing all materials necessary to perform the work, including a new replacement casting; excavation; installation and removal of sheeting and bracing; removal of water from the excavation; disposal of surplus material from the excavation; backfilling the excavation; backfilling the excavation and compaction of the backfill material; saw cutting the existing pavement; construction of the new barrel and cone sections; Kent-Seal, concrete collar connection between the existing structure and the new precast sections; making final casting adjustment in accordance with the Standard Specifications, cleaning out the structure; temporary pavement patching; restoring the site; and all other work incidental to the reconstruction of structures.

The City will pay for measured quantities at the contract unit price under the following bid item:

ITEM #	DESCRIPTION	UNIT
419.01	Construct Type A Sanitary Manhole	VF
419.02	Construct Type B Sanitary Manhole	VF
419.03	Construct Type C Sanitary Manhole	VF
419.04	Construct Type A Outside Drop Manhole	VF
419.05	Construct Type A Dual Outside Drop Manhole	VF
419.06	Construct Type B Outside Drop Manhole	VF
419.07	Construct Type B Dual Outside Drop Manhole	VF
419.08	Construct Type C Outside Drop Manhole	VF
419.09	Construct Type C Dual Outside Drop Manhole	VF
419.10	Construct Type A (48” Dia.) Storm Manhole	VF
419.11	Construct Type B (60” Dia.) Storm Manhole	VF
419.12	Construct Type C (72” Dia.) Storm Manhole	VF
419.13	Construct Type D (84” or 96” Dia.) Storm Manhole	VF
419.14	Construct Type E Storm Manhole	VF
419.15	Construct Standard Inlet	EA
419.16	Construct Special Inlet	EA
419.17	Construct Catch Basin	EA
419.18	Construct Yard Catch Basin	EA
419.19	Remove & Rebuild Type A Sanitary Manhole	VF
419.20	Remove & Rebuild Type B Sanitary Manhole	VF
419.21	Remove & Rebuild Type C Sanitary Manhole	VF
419.22	Remove & Rebuild Type D Sanitary Manhole	VF
419.23	Remove & Rebuild Type A Storm Manhole	VF
419.24	Remove & Rebuild Type B Storm Manhole	VF

419.25	Remove & Rebuild Type C Storm Manhole	VF
419.26	Remove & Rebuild Type D Storm Manhole	VF
419.27	Remove & Rebuild Type E Storm Manhole	VF
419.28	Remove & Replace Type A Sanitary Manhole	VF
419.29	Remove & Replace Type B Sanitary Manhole	VF
419.30	Remove & Replace Type C Sanitary Manhole	VF
419.31	Remove & Replace Type D Sanitary Manhole	VF
419.32	Remove & Replace Type A Sanitary Manhole - Outside Drop	VF
419.33	Remove & Replace Type A Sanitary Manhole - Dual Outside Drop	VF
419.34	Remove & Replace Type A Storm Manhole	VF
419.35	Remove & Replace Type B Storm Manhole	VF
419.36	Remove & Replace Type C Storm Manhole	VF
419.37	Remove & Replace Type D Storm Manhole	VF
419.38	Remove & Replace Standard Inlet	EACH
419.39	Remove & Replace Special Inlet	EACH
419.40	Remove Standard & Replace w/ Special Inlet	EACH
419.41	Remove Catch Basin & Replace Standard Inlet	EACH
419.42	Remove Catch Basin & Replace Special Inlet	EACH
419.43	Reconstruct Type A Sanitary Manhole	VF
419.44	Reconstruct Type B Sanitary Manhole	VF
419.45	Reconstruct Type C Sanitary Manhole	VF
419.46	Reconstruct Type D Sanitary Manhole	VF
419.47	Reconstruct Type A Storm Manhole	VF
419.48	Reconstruct Type B Storm Manhole	VF
419.49	Reconstruct Type C Storm Manhole	VF
419.50	Reconstruct Type D Storm Manhole	VF
419.51	Reconstruct Type E Storm Manhole	VF
419.52	Reconstruct Drop	EACH
419.53	Supply & Place R-1500 Sanitary Casting & Cover	EACH
419.54	Supply & Place R-1510 Sanitary Casting & Cover	EACH
419.55	Supply & Place R-1689 Sanitary Casting & Cover	EACH
419.56	Supply & Place R-1916-D Sanitary Casting & Cover	EACH
419.57	Supply & Place R-1500 Storm Casting & Cover	EACH
419.58	Supply & Place R-1510 Storm Casting & Cover	EACH
419.59	Supply & Place R-1689 Storm Casting & Cover	EACH
419.60	Supply & Place R-3067 Storm Casting & Cover	EACH
419.61	Supply & Place R-3075 Storm Casting & Cover	EACH
419.62	Supply & Place R-3501-TR/TL Storm Casting & Cover	EACH
419.63	Chemical Grout Storm Sewer	EACH

SECTION 420

ADJUSTING MANHOLES AND INLETS

420.1 General

Perform work in accordance with the provisions of WisDOT Standard Specifications for Highway and Structure Construction Section 608 & 611 except as hereinafter modified.

This work consists of providing and setting the concrete or rubber grade rings for manholes, standard inlets, special inlets, and catch basins to final grade along with adjusting the castings to final grade.

420.2 Materials

Rubber grade rings shall be Infra-Riser® or approved equal in a flat and/or tapered configuration of a size to closely match the inside and outside dimensions of circular or rectangular structures, installed individually or in combination not to exceed 4-inches in height and located at the casting. If more than 4-inches of adjustment is necessary, one concrete ring 4-inches or more in height shall be used with rubber rings on top of the concrete ring. Final casting placement shall conform to the finished crown of the road. Where a 4-inch concrete ring or greater is required, there shall be no shimming or mortaring of the concrete ring in order to meet the desired elevation and/or crown and slope of the proposed roadway for manholes and standard inlets. Rubber grade rings shall be tapered to match the slope of the crown and profile of the road. The concrete and metal surfaces to receive sealing compound shall be clean, dry and free of grease or oils.

The rubber grade rings shall be bonded to adjacent surfaces by laying a continuous bead 5/16-inch thick cold applied joint sealant conforming to ASTM-C-920 POLYURETHANE Door, Window & Siding Sealant or PL Premium POLYURETHANE Concrete & Masonry Sealant, manufacturer recommended or equivalent, on the top surface of the concrete of the bottom surface of the grade ring on a diameter 1-inch smaller than the outside diameter of the rubber grade ring. Where more than one grade ring is required, a continuous bead of sealant shall be applied as above. Sealant shall then be applied to the top surface of the grade ring and the casting set firmly in place taking care to properly center it over the structure opening and ensuring a firm contact between the casting and the grade ring. Care shall be taken in backfilling around grade rings and casting prior to joint sealant being fully cured.

420.3 Construction Methods

A. Asphalt Roadways.

The Contractor shall provide and set rubber grade rings for manholes, standard inlets, and special inlets within the roadway limits (back of curb to back of curb) of an asphalt roadway. A manhole or inlet outside of the roadway limits may be set with concrete rings.

B. Concrete Roadways.

The Contractor shall provide and set concrete rings for manholes, standard inlets, and special inlets within the roadway limits (back of curb to back of curb) of a concrete roadway where a slip-form paving machine is used. A manhole or inlet outside of the roadway limits may also be set with concrete rings.

The Contractor shall provide and set rubber grade rings for manholes, standard inlets, special inlets, and catch basins within the roadway limits (back of curb to back of curb) of a concrete roadway where hand pouring (formed area) is the method of placement.

Where a 4-inch concrete ring or greater is required to adjust a special inlet not located at the absolute low point in the roadway, a sand-gravel mortar adjustment layer can be placed immediately below the upper most concrete section. The sand-gravel mortar layer shall be not less than ½-inch thick at the downstream edge of the inlet and tapered to be not more than 2-inches in thickness at the upstream edge of the inlet. The sand-gravel mortar layer is not to be used to adjust to final elevation but used to conform to the finished road crown or slope of the roadway.

Concrete rings shall be of a size that closely matches the inside and outside dimensions of the structures. If more than 4-inches of adjustment is necessary, one concrete ring 4-inches or more in height shall be used with a maximum of one 2-inch concrete ring on top. Concrete rings shall be tied to the structure using a minimum of two (2) No. 4 rebar, spaced on opposite sides of the structure, when the total thickness of concrete rings is 6-inches or greater. The hole for the bar shall be drilled to a depth of 6-inches into the top of the structure and to such a diameter as to provide a secure fit. The bar shall be of adequate length to secure the concrete rings to the structure without protruding out of the top concrete ring. Final casting placement shall conform to the finished crown of the road. The Contractor may shim and/or mortar the concrete ring a maximum of 2-inches to match the slope of the crown and the profile of the concrete road.

The Contractor shall compact around each manhole, inlet, and catch basin to prevent settling, whether rubber grade rings or concrete rings are used.

420.4 Measurement and Payment

Adjusting Manholes and Inlets shall be considered incidental to the appropriate manhole, inlet, and catch basin work as specified in other bid items when constructing new or reconstructed structure within same contract.

Adjusting Manholes, Adjusting Standard Inlets, and Adjusting Special Inlets will be measured by the unit EACH for every structure adjusted up to a maximum adjustment of +/- 12” per structure, and will be paid for under the following bid items:

ITEM #	DESCRIPTION	UNIT
420.01	Adjust Manholes w/ Rubber Rings	EACH
420.02	Adjust Standard Inlets w/ Rubber Rings	EACH
420.03	Adjust Special Inlets w/ Rubber Rings	EACH
420.04	Adjust Manholes w/ Concrete Rings	EACH
420.05	Adjust Standard Inlets w/ Concrete Rings	EACH
420.06	Adjust Special Inlets w/ Concrete Rings	EACH

Page Intentionally Left Blank

SECTION 421

MINI-STORM SEWERS

421.1 General

Perform work under this section shall apply to the construction of mini-storm sewer.

Mini-storm sewer is defined as a smaller diameter storm sewer pipe constructed within existing residential areas for the purpose of providing clear water connections to residential property. Mini-storm sewer is generally constructed within the road right-of-way outside of the actual roadway.

421.2 Materials

Mini-storm sewer shall be constructed of 6” PVC pipe and shall meet the requirements of Section 413.

Bedding material consisting of ¾” crushed stone, as defined in Section 404.

421.3 Construction Methods

A. Mini-Storm Sewer.

Mini-storm sewer service clean-outs shall be constructed as directed in the Contract Documents or as directed by the Engineer. Mini-storm sewer clean-outs shall be constructed as shown in the Standard Detail Drawings.

The Contractor shall avoid placing mini-storm sewer clean-outs in concrete pavement. In the event that this cannot be avoided the Contractor shall construct a frost sleeve over the mini-storm sewer clean-out. The frost sleeve shall be constructed as shown in the Standard Detail Drawings.

B. Bedding Material.

Bedding material shall be placed from a depth of four (4) inches below the bottom of the pipe and completely cover the mini-sewer with six (6) inches of ¾” crushed stone bedding and backfill material. The ¾” bedding material shall be considered incidental to the bid price for the mini-storm sewer.

C. Trench Backfill & Compaction.

Natural backfill may be used in trenches for all mini-storm sewer construction in terrace areas, except under pavement, driveway, and sidewalk crossings where 3/4” crushed stone is required. Compaction shall be as specified in the Section 404.

Slurry backfill meeting the requirements specified in Section 404.2 to be used in any locations where typical backfill cannot be used such as augured trenches under trees.

The natural and crushed stone trench backfill material and placement of the backfill material shall be considered incidental to the bid price for the mini-storm sewer.

D. Perforated Underdrain.

The first six feet of mini-storm sewer at all existing inlets or catch basins shall be constructed of perforated underdrain pipe. The footage of underdrain will be included in the total measured footage of mini-storm sewer and will be paid under the bid price for mini-storm sewer.

Where clay backfill is to be used, crushed gravel, not clean stone, shall be placed 4" below the underdrain, 12" above the underdrain and to the full width of the trench for underdrain. The cost of supplying and placing the crushed gravel shall be considered incidental to the contract.

E. Bends and Tees.

No bends greater than 45 degrees or tees will be allowed.

F. Sump Pump Connections.

The Contractor is responsible for connecting those sump pumps for which the property owners have obtained the necessary plumbing permits, which allow connection to the mini-storm sewer. The property owners will be responsible for installation within their property to the right-of-way line. The connection by the Contractor will be from the right-of-way line to the 6" mini-storm sewer. The cost of connections shall be included as a unit cost bid item.

G. Tree Protection.

All trees in the areas of the mini-storm sewer construction must be protected from damage. The Contractor shall follow the directives of the Standard Detail Drawing concerning the allowable distance from the tree that can be open cut. The Contractor shall auger, or directionally bore beneath trees in order to protect the tree. The cost of repairing or replacing trees damaged by the Contractor will be the responsibility of the Contractor. The City will arrange for the repair or replacement of damaged trees and the cost of such work shall be deducted from the payments to the Contractor.

H. Mini-Storm Sewer Placement.

Distances from back of curb to the mini-storm sewer are not to be scaled off the plan. All mini-storm sewers are to be installed as close as possible to the back of curb without undermining and/or damaging the curb or conflicting with other utilities.

I. 2" Polystyrene Insulation.

The Contractor shall place 2" polystyrene insulation over all 6" mini-storm sewer where specified on the plans and under all sidewalk and driveway disturbed aprons to construct sump pump connections, or if cover from back of curb to top of pipe is 3 ft. or less. The insulation shall be placed for the full width of the actual trench and along both sides of pipe. The cost of insulation under driveway aprons and sidewalk only shall be considered incidental to the contract; additional insulation beyond sidewalks and driveway aprons will be paid for under the unit bid item for Insulation.

J. Additional Topsoil and Sodding on Settled Trenches

The Contractor shall contact the Department of Public Works – Engineering Division to arrange a field inspection of all trenches to determine if settlement occurred during the winter and to assure that the sod has been established. Notification shall be made one week prior to conducting the field investigation. The Contractor shall bear the cost to place additional topsoil and resod, as directed by the Engineer, on all trenches that have settled. The Contractor shall bear the cost to place new sod, as directed by the Engineer, on any areas where the sod has not been established. If this work is not completed by the first Friday in June, the Engineer may have the trenches restored by others at the Contractor's expense.

421.4 Measurement and Payment

Terrace Restoration, Temporary trench patching, Concrete Pavement, Hot Mix Asphalt, and Saw cuts, shall be completed in accordance with other sections of these Standard Specifications.

The City will pay for the work specified at the contract unit price under the following bid item and if not specified within a Bid Proposal shall be considered incidental to other work:

ITEM #	DESCRIPTION	UNIT
421.01	6" Mini-Storm Sewer with ¾" CABC Bedding	LF
421.02	Mini-Storm Sewer Service Clean-Out	EA
421.03	Reverse Mini-Storm Sewer Clean-Out	EA
421.04	Remove and Salvage Existing Clean-Out	EA
421.05	Construct Salvaged Clean-Out	EA
421.06	Frost Sleeve for Clean-Outs	EA
421.07	Sump Pump Connections from ROW to Mini Sewer	EA

Page Intentionally Left Blank

SECTION 422

MANHOLE REHABILITATION

422.1 General

This specification shall govern all labor, materials, equipment, and appliances necessary for sewer manhole interior rehabilitation.

Each installer must satisfy all insurance, financial, and bonding requirements of the City, and have at least three years active experience in the installation of the product. In addition, the installer must have successfully installed at least 500 vertical feet of the product in wastewater collection systems.

The site superintendent in direct responsible charge of the manhole rehabilitation () installation shall have extensive experience in the installation of. Information documenting who the site superintendent will be and their experience in installation shall be submitted to the City. The City's decision regarding the qualification of the site superintendent shall be final. If the initial site superintendent does not meet the experience criteria, the Contractor shall submit a more qualified individual or otherwise satisfy the City regarding the installation supervision and quality control.

The following terms are considered necessary to complete the work as specified and therefore considered incidental to other bid items.

1. Mobilization and site preparation
2. Pre-rehabilitation photo documentation
3. Cleaning of existing manholes to condition necessary for proper installation of product
4. The repair and filling of voids
5. The elimination of active infiltration prior to making the application
6. The spray application of a cementitious mix to for a structural monolithic cementitious liner
7. Flow control, including sewerage bypassing, if required
8. Post-rehabilitation photo documentation
9. Cleanup
10. Other appurtenant and incidental work
11. A Bulk Water Permit must be obtained from the Green Bay Water Utility prior to any water being obtained from any of the Bulk Water Station Locations for use in cleaning the existing sewers. The Green Bay Water Utility is located at 631 South Adams Street, and can be contacted at (920) 448-3480 for additional information that may be required.

422.2 Materials

A. Patching Mix

A quick-setting cementitious material for patching and filling voids and cracks. Materials shall have the following minimum requirements:

• Compressive Strength	ASTM C-109	6hr	1,400 psi
• Bond	ASTM C-321	28 day	150 psi
• Shrinkage	ASTM C-596	0% at 90% R.H.	

B. Infiltration Control Mix

A rapid setting cementitious product specifically formulated for infiltration control. Material shall have the following minimum requirements:

• Compressive Strength	ASTM C-109	1hr	600 psi
		24 hr	1,000 psi
• Bond	ASTM C-321	1hr	30 psi
		24 hr	80 psi

C. Grouting Mix

A rapid setting cementitious or chemical grout specifically formulated for stopping very active infiltration and filling voids

D. Liner Mix

An ultra high strength, high build, corrosion resistant cement with the following minimum requirements:

• Compressive Strength	ASTM C-109	1day	3,000 psi
		28 day	9,000 psi
• Flexural Strength	ASTM C-293	1 day	650 psi
		28 day	800 psi
• Shrinkage	ASTM C-157	0% at 90% Relative Humidity	

The material should meet or exceed industry standards and shall not have any basic ingredient that exceeds EPA maximum allowable limits for any heavy metal.

E. Water

Water used to mix product shall be clean and potable.

F. Submittals

Submittals are due at the preconstruction meeting with the exception of post rehabilitation photo documentation, which is due prior to the final acceptance of the project.

1. Manufacturer's product literature, application and installation instructions for all products used.
2. Manufacturer's product certification
3. Contractor certification
4. Site superintendent experience/resume
5. Provide documentation that the proposed manhole rehabilitation process has a three year history for reconstruction of sewer manholes on projects of similar size and scope.
6. Manhole liner thickness design
7. Detailed construction schedule incorporating traffic control
8. Business and residential notification letters
9. Pre- and post-rehabilitation photo documentation

G. Quality Assurance

The City may randomly request up to four-two inch cubes be cast each day in accordance with ASTM C-140, or one from every pallet of product used for compressive strength testing. The cost of testing shall be considered incidental to the Contract.

Thickness shall be verified with a wet gage at any random point designated by the City.

422.3 Construction Methods

1. Manhole Preparation

a. Place covers over sewer inverts to prevent extraneous material from entering the sewer lines.

b. Clean the interior surfaces of the manhole to remove grease, oil, and other contaminants that would prevent good bond between the existing manhole interior surface and the liner material.

c. Digitally photo document the cleaned manhole condition prior to any patching. The photo shall identify the structure number (000-Pre) and shall include the date of cleaning. The pre-rehabilitation and post rehabilitation photos shall be placed in a report, electronic power point, or other standard electronic format or provide a hard copy, that will be submitted to the Engineer prior to final payment.

d. Loose and protruding brick, mortar, and concrete shall be removed using a mason's hammer and chisel and/or scraper.

e. Remove any existing steps.

f. Stop any active leaks with plugging material according to the instruction on the data sheets.

g. Fill voids and overhangs with patching material.

h. Areas of manholes that are structurally damaged and in need of repair beyond the scope of this specification shall be brought to the attention of the Engineer.

i. If the existing manhole has no bench, one needs to be constructed prior to lining the manhole. The height of the constructed bench will be a minimum of one half the inside diameter of the outfall pipe.

j. Area to be reconstructed shall be done prior to lining.

2. Liner Application

a. For each bag of product, use the amount of water required per manufacturers' recommendations following mixing procedures noted on product packaging.

b. Cementitious liner shall be applied to manhole interior using a rotating casting applicator to a minimum thickness of one-half (1/2) inch or with a spray gun applicator provided that the Contractor can provide documentation that they are qualified and experienced in installing a uniform thickness of not less than one-half (1/2) inch of cementitious lining material.

c. After the interior walls have been completed, the covers over the inverts shall be removed and the bench sprayed in such a manner that a gradual slope is produced from the wall to the invert with the thickness at the invert to be not less than one-half (½) inch. The wall bench intersection shall be rounded to a uniform radius to full circumference of the intersection.

d. No application shall be made if ambient temperature is below 40 degrees Fahrenheit.

e. No application shall be made to frozen surfaces or if freezing is expected to occur within the substrate within twenty-four (24) hours after application.

f. Precautions shall be taken to keep the mix temperatures at time of application below ninety (90) degrees Fahrenheit. Water temperature shall not exceed eighty (80) degrees Fahrenheit.

g. The Contractor shall not spray the structure until all work designated around it (CIPP, reconstruction, re-laid sewer, etc.) is completed.

h. The Contractor shall be responsible for protecting the pavement from damage from their operations/equipment.

i. When the structure is designated to be reconstructed, the Contractor shall only spray one (1) foot past new structure.

j. The Contractor shall gently score around the bottom of the casting and adjustment rings to aid in creating a break point for future adjustment.

k. After application, Contractor and Engineer shall visually verify the absence of leaks.

l. Digitally photo document the rehabilitated structure. The photo shall identify the structure number (000-Post) and shall include the date of rehabilitation. The pre-rehabilitation and post rehabilitation photos shall be placed in a report, electronic power point, or other standard electronic format or provide a hard copy, that will be submitted to the Engineer prior to final payment.

422.4 Measurement and Payment

Payment will be made at the unit price per vertical foot of finished wall for each prescribed thickness.

The City will pay for measured quantities at the contract unit price under the following bid item:

ITEM #	DESCRIPTION	UNIT
422.01	Sanitary Manhole Rehabilitation	VF
422.02	Storm Manhole Rehabilitation	VF
422.03	Storm Inlet / Catch Basin Rehabilitation	VF
422.04	Sanitary Manhole Rehabilitation	EACH
422.05	Storm Manhole Rehabilitation	EACH
422.06	Storm Inlet / Catch Basin Rehabilitation	EACH

Page Intentionally Left Blank

SECTION 423

CURED-IN-PLACE PIPE (CIPP)

423.1 General

1. Summary

   a. Each installer must satisfy all insurance, financial and bonding requirements of the City, and have at least 3 years active experience in the installation of the product. In addition, the installer must have successfully installed at least 25,000 feet of the product in wastewater collection system installations.

   b. The site superintendent in direct responsible charge of the CIPP installation shall have extensive experience in the installation of CIPP. Information documenting who the site superintendent will be and their experience in CIPP installation shall be submitted to the City. The City's decision regarding the qualification of the site superintendent shall be final. If the initial site superintendent does not meet the experience criteria, the Contractor shall submit a more qualified individual or otherwise satisfy the City regarding the installation supervision and quality control.

   c. Videos of the sewers have been recorded at various dates since 2011, and are available for viewing by Contractors. These videos document the condition of the sewers at that time and are made available for informational purposes only.

   d. The following terms are considered necessary to complete the work as specified, and therefore considered incidental to other items bid.

      1. Mobilization and site preparation.

      2. Televising of sanitary to determine installed conditions.

      3. Cleaning of existing sanitary to condition necessary for proper installation of product.

      4. Determining if existing service connections are active or bulkheaded.

      5. Placement of lining material within sanitary.

      6. Flow control, including sewerage bypassing, if required.

7. Reinstatement and reconnection of active service connections. The City must approve the lining over of bulkhead connections. A City representative will review pre-televising to make this determination. Contractor to submit in writing connections to be reviewed

8. Sewer testing and internal inspections of installation.

9. Cleanup.

10. Gaskets, manhole, sealing, and manhole bench and channel reconstruction.

11. Other appurtenant and incidental work.

12. Any water required for inversion or curing of the CIPP, the Green Bay Water Utility (GBWU), Telephone No. 448-3480, must be contacted for a Permit before any water is taken from a hydrant. See "BULK WATER STATIONS" section.

423.2 Materials

References

American Society for Testing and Materials (ASTM):

1. ASTM D543 Test Method for Resistance of Plastics to Chemical Reagents
2. ASTM D638 Test Method for Tensile Properties of Plastics
3. ASTM D790 Test Method for Flexural Properties of Unreinforced and Reinforced plastics and Electrical Insulating Materials.
4. ASTM F1216 Rehabilitation of Existing Pipelines and Conduits by Inversion and Curing of a Resin-Impregnated Tube.

Submittals

1. Product Data

   a. Manufacturer's product literature, application and installation requirements for materials used in liner.
   b. Manufacturer's product certification for materials used in liner.
   c. Liner Pipe Thickness Design.

      1. Liner Pipe Thickness Design shall be in accordance with Appendix XI of ASTM F1216. The existing sewer shall be considered to be in a fully deteriorated gravity pipe condition and that the original pipe is not structurally sound and cannot support soil and live loads. The cured-in-place pipe (CIPP) shall be designed to support hydrostatic, soil and live loads. Hydrostatic load shall assume a ground water elevation of two (2) feet below the existing ground. In the liner

thickness calculations, the minimum ovality of the host pipe shall be as determined from the City video tape available for review, but no less than 1%, the enhancement factor (K) shall not be greater than 7.0, the minimum safety factor shall be 2.0, and the flexural modulus of elasticity shall be reduced 50% to account for long term effects and used in the design equation EL.

The Contractor shall be responsible for all aspects of the design of the liner pipe. The Contractor shall guarantee that the installed liner is capable of sustaining outside loads, resist chemical attack that normally occurs in sanitary sewer, and will maintain hydraulic characteristics over a fifty (50) year design life. No design shall rely on bonding to the existing pipe or rely on the remaining strength of the existing pipe.

2. No liner shall be installed until the design has been approved for installation.

3. No liner will be approved for installation until liner thickness calculations have been submitted and reviewed for conformance with the specifications and installation requirements.

2. Miscellaneous Submittals

a. Video of pipe condition. (Pre-lining)
b. Post lining televising with final report showing all reinstated connections. Report shall be handed in within one month of lining. If the televising is not received within one month, the City reserves the right to hire a Contractor to televise and the cost for performing those services will be deducted from the contract.
c. Test results as required in the specification.
d. Proposed plan for bypassing sewage during liner installation.
e. Detailed construction schedule incorporating traffic control.
f. Business and residential notification letters

Quality Assurance

1. Corrosion

Fabricate finished liner from materials which, when cured, will be chemically resistant to withstand internal exposure to domestic sewage.

2. Manhole Connections

All manhole connections shall be watertight.

3. Testing

    a. Test finished pipe liner in accordance with the "Field Quality Control Section".
    b. Test finished pipe for leakage in accordance with the requirements of ASTM F1216.8.2.
    c. Products for Cured-In-Place Liner

4. Resin

    Polyester resin for general chemical applications:

    a. Resin shall not contain fillers, except those required for viscosity control. Up to 5% mass thixotropic agent, which will not interfere with visual inspection may be added for viscosity control.
    b. Resins may contain pigments, dyes or colorants, which will not interfere with visual inspection of cured liner.

5. Reinforcing Material:

    Non-Woven, needle interlocked polyester felt formed into sheets of required thickness.

    a. Felt tubes may be made of single or multiple layer construction; with any layer not less than 1.5 mm thick.
    b. Mechanical strengthener membrane or strips may be sandwiched in between layers where required to control longitudinal stretching.
    c. Polyurethane membrane used during inversion of tube may be left on internal surface of liner after curing.
    d. Minimum thickness of bonded polyurethane membrane and inner liner, if used shall be 0.25 mm, +5%, and shall not affect structural dimension requirements of cured liner.

6. Felt Content

    a. Content shall ensure cured thickness of liner as specified.
    b. Thickness of cured liner to be as specified (+10%-4%) and shall not include thickness of polyurethane inner liner.

7. Resin Content

    10 to 15% by volume greater than volume of felt in liner bag.

8. Cured liner shall conform to minimal structure standards listed:

	Standard	Value
Tensile Strength	ASTM D638	3,000 psi
Flexural Modulus of Elasticity	ASTM D790	250,000 psi
Flexural Strength	ASTM D790	4,500 psi

9. Fabricate liner to size that when installed will fit internal circumference of pipe. Allowance shall be made for circumferential stretching during insertion.

10. Meet requirements of ASTM F-1216.

423.3 Construction Methods

Installation Preparation

1. Examination

   Examine videos of condition of pipe interior before starting work.

2. Preparation

   a. Prior to entering access areas such as manholes, and performing inspection or cleaning operations, an evaluation of the atmosphere to determine the presence of toxic or flammable vapors or lack of oxygen must be undertaken in accordance with local, state, or federal safety regulations.

   b. Prior to liner installation sufficiently clean roots, grease, mineral deposits, and other debris from sewer to provide a minimum of 95% opening throughout the pipe line and to provide for proper installation of product.

   c. Remove or repair offset joints, protruding services, or collapsed pipe that will prevent insertion of liner, as determined from the City video available for review by the Contractor. The Contractor shall receive additional payments for additional excavation spot repairs required due to further deterioration of the pipe from the pre-bid video to the pre-construction video. The City reserves the right to delete the lining on any particular manhole-to-manhole pipe section.

   d. If Contractor or Engineer determines that existing pipe is 15% or more out of roundness, Contractor shall redesign liner.

   e. Sewage Bypassing

      Provide for flow of sewage around sections of pipe to be lined.

      i) Pump or bypass lines shall be of adequate size and capacity to handle flow.
      ii) Coordinate bypassing operations with OWNER.

f. It shall be the responsibility of Contractor to notify individuals and businesses whose sanitary sewer will be interrupted during pipe lining operations. It shall be the responsibility of the Contractor to provide necessary service to businesses affected by the lining operation.

g. One stretch of pipe at a time (manhole to manhole) shall be installed unless otherwise approved by the Engineer.

Installation

a. Preparation of Liner

Resin Impregnation

1. Designate location where uncured resin in original containers and unimpregnated liner will be vacuum impregnated prior to installation. Contractor shall allow Engineer to inspect materials and "wet out" procedure.

2. Resin and catalyst system compatible with requirements of this method shall be used. Quantities of liquid thermosetting materials shall be to manufacturer's standards to provide lining thickness required.

3. Liner tube shall be impregnated with resin not more than 7 days prior to the proposed time of installation and stored out of direct sunlight at temperature less than 40 degrees Fahrenheit (4 degrees Celsius). Any line stored longer than 7 days must be certified by the installer prior to placement. The certification must state that the liner and resin are still viable for installation, and that the curing process has not advanced so far to impede inversion or affect the properties of the final installed product. Any liner stored on-site longer than 7 days must be tested for flexural strength (ASTM D790) by the Contractor at no additional cost to the City of Green Bay. Test results must be submitted to the Engineer prior to final payments of the Contract.

4. Transport resin impregnated liner to site immediately prior to inversion in suitable lightproof container with temperature maintained below 40 degrees Fahrenheit (4 degrees Celsius).

b. Inversion of Liner

1. Using Hydrostatic Head – The wet-out tube should be inserted through an existing manhole or other approved access by means of an inversion process and the application of a hydrostatic head sufficient to fully extend it to the next designated manhole or termination point.

The tube should be inserted into the vertical inversion standpipe with the impermeable plastic membrane side out. At the lower end of the inversion standpipe, the tube should be turned inside out and attached to the standpipe so that a leak proof seal is created. The inversion head should be adjusted to be of sufficient height to cause the impregnated tube to invert from point of inversion to point of termination and hold the tube tight to the pipe wall, producing dimples at side connections. Care should be taken during the inversion so as not to over-stress the felt fiber.

The tube manufacturer should provide information on the maximum allowable tensile stress for the tube.

2. Using Air Pressure – The wet-out tube should be inserted through an existing manhole or other approved access by means of an inversion process and the application of air pressure sufficient to fully extend it to the next designated manhole or termination point. The tube should be connected by an attachment at the upper end of the guide chute so that a leak proof seal is created and with the impermeable plastic membrane side out. As the tube enters the guide chute, the tube should be turned inside out. The inversion air pressure should be adjusted to be of sufficient pressure to cause the impregnated tube to invert from point of inversion to point of termination and hold the tube tight to the pipe wall, producing dimples at side connections. Care should be taken during the inversion so as not to overstress the woven and nonwoven materials.

   Warning: Suitable precautions should be taken to eliminate hazards to personnel in the proximity of the construction when pressurized air is being use.

3. Required Pressures – Before the inversion begins, the tube manufacturer shall provide the minimum pressure required to hold the tube tight against the existing conduit, and the maximum allowable pressure so as not to damage the tube. Once the inversion has started, the pressure shall be maintained between the minimum and maximum pressures until the inversion has been completed. Should the pressure deviate from within the range of the minimum and maximum pressures, the installed tube shall be removed from the existing conduit.

4. Lubricant – The use of a lubricant during inversion is recommended to reduce friction during inversion. This lubricant should be poured into the inversion water in the down tube or applied directly to the tube. The lubricant used should be a nontoxic, oil-based product that has no

detrimental effects on the tube or boiler and pump system, will not support the growth of bacteria, and will not adversely affect the fluid to be transported.

c. Curing Liner

1. Using Circulating Heated Water – After inversion is completed, a suitable heat source and water recirculation equipment are required to circulate heated water throughout the pipe. The equipment should be capable of delivering hot water throughout the section to uniformly raise the water temperature above the temperature required to affect a cure of the resin. Water temperature in the line during the cure period should be as recommended by the resin manufacturer.

2. The heat source should be fitted with suitable monitors to gage the temperature of the incoming and outgoing water supply. Another such gage should be placed between the impregnated tube and the pipe invert at the termination to determine the temperatures during cure.

3. Initial cure will occur during temperature heat-up and is completed when exposed portions of the new pipe appear to be hard and sound and the remote temperature sensor indicates that the temperature is of a magnitude to realize an exotherm or cure in the resin. After initial cure is reached, the temperature should be raised to the post-cure temperature recommended by the resin manufacturer. The post-cure temperature should be held for a period as recommended by the resin manufacturer, during which time the recirculation of the water and cycling of the boiler to maintain the temperature continues. The curing of the CIPP must take into account the existing pipe material, the resin system, and ground conditions (temperature, moisture level, and thermal conductivity of soil).

4. Using Steam – After inversion is completed, suitable steam-generating equipment is required to distribute steam throughout the pipe. The equipment should be capable of delivering steam throughout the section to uniformly raise the temperature within the pipe above the temperature required to affect a cure of the resin. The temperature in the line during the cure period should be as recommended by the resin manufacturer.

5. The steam-generating equipment should be fitted with a suitable monitor to gage the temperature of the outgoing steam. The temperature of the resin being cured should be monitored by placing gages between the impregnated tube and the existing pipe at both ends to determine the temperature during cure.

6. Initial cure will occur during temperature heat-up and is completed when exposed portions of the new pipe appear to be hard and sound and the remote temperature sensor indicates that the temperature is of a magnitude to realize an exotherm or cure in the resin. After initial cure is reached, the temperature should be raised to post-cure temperatures recommended by the resin manufacturer. The post-cure temperatures recommended by the resin manufacturer. The post-cure temperature should be held for a period as recommended by the resin manufacturer, during which time the distribution and control of steam to maintain the temperature continues. The curing of the CIPP must take into account the existing pipe material, the resin system, and ground conditions (temperature, moisture level, and thermal conductivity of soil).

7. Required Pressures – Before the curing begins, the pressure required to hold the flexible tube tight against the existing conduit, shall be provided by the tube manufacturer. Once the cure has started and dimpling for laterals is completed, the required pressure shall be maintained until the cure has been completed. Should the pressure deviate more than 2.3 ft. of water (1 psi) from the required pressure, the installed tube shall be removed from the existing conduit. If required by the owner, a continuous log of pressure during cure shall be maintained.

d. Cooling Lines

1. Using Cool Water After Heated Water Cure – The new pipe should be cooled to a temperature below 100°F (38°C) before relieving the static head in the inversion standpipe. Cool-down may be accomplished by the introduction of cool water into the inversion standpipe to replace water being drained from a small hole made in the downstream end. Care should be taken in the release of the static head so that a vacuum will not be developed that could damage the newly installed pipe.

2. Using Cool Water After Steam Cure – The new pipe should be cooled to a temperature below 113°F (45°C) before relieving the internal pressure within the section. Cool-down may be accomplished by the introduction of cool water into the section to replace the mixture of air and steam being drained from a small hole made in the downstream end. Care should be taken in the release of the air pressure so that a vacuum will not be developed that could damage the newly installed pipe.

Connections

Service Connections

a. Locations
Determine service connection locations from television inspection videos completed by the Contractor.

b. Reinstatements
1. Reinstate and reconnect all service connections unless service connection is positively identified as bulkheaded on the Contractor's Pre-TV inspection, and the city gives written instructions not to reinstate or reconnect specific Services.

2. Reconnect services without excavation by television camera and remote control cutting device that re-establishes services for minimum of 95% of the flow capacity. Capture all cuttings.

3. Sanitary services shall not be out of service for more than 6 hours without the Engineer's permission during lining process. Any lining section anticipated to take longer than 6 hours must be presented at the preconstruction meeting with a proposed schedule indicating proposed time for inversion, curing, cool down, and lateral opening.

4. Services shall be cut round and edges shall be smooth and brushed.

c. Manhole Connections

1. Reconstruct benches and channels in manholes with grout to match new invert elevations.
2. At the connection to the manhole, provide a watertight seal between the host pipe and liner pipe with a resin mixture compatible with the CIPP. The seal shall also meet the requirements of ASTM C-443.

Field Quality Control

1. Finished Liner

a. Liner shall be continuous over entire length of inversion run and be free of visual defects such as foreign inclusions, dry spots, pinholes, major wrinkles and delamination. If these conditions are present, remove and replace the CIPP in these areas.

b. During curing process, gauge water tightness under positive head.

c. Liner shall conform to shape of pipe existing before installation and not be out of round more than 15%.

2. Liner Thickness

   a. Cured liner shall be accurately measured and shall not be more than 5% less than thickness specified.

3. Felt and Resin Content of Liner

   a. Visually inspect liner to ensure number of layers of felt conforms to specified number of layers and thickness.

   b. Calculate resin to felt ratio by weight.

   c. This ratio and supporting calculations is to be given to the Engineer prior to acceptance of the project. The ratio shall fall in range 1.0:1 to 1.15:1.

4. Testing

   a. Flexural Strength and Modulus of Elasticity.

   b. Test in accordance with ASTM D790.

   c. Specimens tested shall be actual thickness of fabricated liner.

   d. Do not machine specimen on surface.

   Make test with smooth (inner) face in compression using 5 specimens.

   Testing shall be performed by the Contractor for each liner not cut from the same batch.

5. Examination

   a. Televise interior of pipe after completion of Work and provide tape to City.

   b. Use pan and tilt color 3 lux camera to account for and view the sewer service lateral connection reinstatement and to insure they are unobstructed.

   c. No infiltration of groundwater should be observed.

Cleaning & Restoration

At completion of work, remove rubbish, debris, dirt, equipment and excess material from site. Clean adjacent surfaces soiled by and during course of work.

423.4 Measurement and Payment

Measure sanitary sewers and storm sewers on straight horizontal line along centerline of sewer from center of structure to center of structure.

Connecting to a sewer which has been previously lined with CIPP by the method referenced above shall be included in the cost of the reconstruction of the entire lateral connection.

The City will pay for measured quantities at the contract unit price under the following bid item:

ITEM #	DESCRIPTION	UNIT
423.01	Install 8" CIPP Sanitary Sewer	LF
423.02	Install 10" CIPP Sanitary Sewer	LF
423.03	Install 12" CIPP Sanitary Sewer	LF
423.04	Install 15" CIPP Sanitary Sewer	LF
423.05	Install 18" CIPP Sanitary Sewer	LF
423.06	Install 21" CIPP Sanitary Sewer	LF
423.07	Install 24" CIPP Sanitary Sewer	LF
423.08	Install 27" CIPP Sanitary Sewer	LF
423.09	Install 30" CIPP Sanitary Sewer	LF
423.10	Install 36" CIPP Sanitary Sewer	LF
423.11	Install (Size) CIPP Sanitary Sewer	LF
423.12	Install 12" CIPP Storm Sewer	LF
423.13	Install 15" CIPP Storm Sewer	LF
423.14	Install 18" CIPP Storm Sewer	LF
423.15	Install 21" CIPP Storm Sewer	LF
423.16	Install 24" CIPP Storm Sewer	LF
423.17	Install 27" CIPP Storm Sewer	LF
423.18	Install 30" CIPP Storm Sewer	LF
423.19	Install 36" CIPP Storm Sewer	LF
423.20	Install 42" CIPP Storm Sewer	LF
423.21	Install 48" CIPP Storm Sewer	LF
423.22	Install 54" CIPP Storm Sewer	LF
423.23	Install 60" CIPP Storm Sewer	LF
423.24	Install 72" CIPP Storm Sewer	LF
423.25	Install 84" CIPP Storm Sewer	LF
423.26	Install 96" CIPP Storm Sewer	LF
423.27	Install (Size) CIPP Storm Sewer	LF

DIVISION 5

WATER UTILITY

SECTION 501

GENERAL REQUIREMENTS FOR WATER MAIN CONSTRUCTION

501.1 General

This section includes general requirements for water main and water service construction.

501.2 Construction Notifications

A seventy-two (72) hour notification shall be given in writing to the Green Bay Water Utility prior to start of construction. The Contractor, or their representative, shall meet with a Water Utility representative on the construction site at least 24 hours prior to the start of water main construction.

A seventy-two (72) hour notification shall be given to the Green Bay Water Utility prior to the interruption of water service.

501.3 Information Relating to the Existing Facilities

The Green Bay Water Utility existing facilities were constructed during the past 130 years. Partial sets of the contract documents under which the existing water facilities were constructed are available for inspection and viewing at the Green Bay Water Utility at 631 South Adams Street, Green Bay, Wisconsin. Because of the nature of the work and changes initiated by operating personnel, some adjustments may be required in the field to meet existing conditions.

The Contractor shall make such adjustments as required by the Engineer and, if no additional material is required over that shown or specified, the Contractor shall do so at no additional cost to the Utility. If additional materials are required, the Contractor will be paid for the additional materials as extra work.

501.4 State Approval

The Water Utility will obtain Wisconsin Department of Natural Resources (WDNR) approval for the water main construction. The Contractor shall perform all work in accordance with the requirements as set forth in the WDNR approval letter. A copy of the approval letter for the water main construction may be obtained from the Green Bay Water Utility at 631 South Adams Street, Green Bay.

501.5 Trenching

501.5.1 Compaction Testing

The standard test to define maximum densities of all compaction work shall be ASTM D1557. All densities shall be expressed as a percentage of the maximum density obtained in the laboratory by the foregoing standard procedure.

Periodically throughout the job, the Engineer will perform density tests on bedding and backfill as placed by the Contractor. The Contractor shall provide an OSHA approved trench that an independent testing agency can safely sample, test, and inspect in-place materials at times selected by the Engineer and without additional compensation or additional time.

501.5.2 Materials
501.5.2.1 Submittals

The Contractor shall submit test reports for the bedding and select backfill material at least forty-eight (48) hours prior to the start of water pipeline construction. These tests shall include the source of the material, the moisture density relationship, and the gradation results prepared by a certified testing laboratory acceptable to the Engineer. No material shall be used unless it has been accepted by the Engineer.

501.5.2.2 Water Main Bedding and Backfill

Water main bedding and backfill shall conform to Section 404 of the Standard Specification, except as hereinafter modified:

Water main bedding shall be virgin material and shall conform to WisDOT ¾" dense graded base gradation.

501.5.2.3 Drain Rock

Drain rock shall be shall be a clean, washed, sound and durable well-graded crushed rock, crushed gravel, or gravel. When tested in accordance with ASTM C 136, drain rock shall conform to the gradation requirements for Open Graded Base per Section 310 of the State of Wisconsin, Department of Transportation, Standard Specifications for Highway and Structure Construction.

501.5.3 Construction Methods
501.5.3.1 Trench Excavation, Bedding, Backfill

Work shall be performed in accordance with Section 404 of the Standard Specification, except as hereinafter modified.

Substitute "water pipeline(s) and appurtenances" for the following: "sewer(s)" or "sewer pipe(s)" or "sanitary or storm sewer (systems)".

The bedding material shall be compacted using handheld mechanical compaction equipment to a minimum depth of 12-inches over the top of the pipe.

Delete Sections 404.3.M, 404.3.N, 404.4.B, 404.4.J.

The cost to furnish and install insulation shall be considered incidental to the cost of the water main installation.

501.5.3.2 Rock Excavation

Work shall be performed in accordance with Section 405 of the Standard Specification.

501.6 General Requirements for Potable Water Pipeline Construction
501.6.1 General

This subsection describes general requirements for potable water pipeline construction including all labor, material, and equipment necessary to construct water main pipelines and appurtenances, as shown and specified.

501.6.2 Materials
501.6.2.1 Submittals

The Contractor shall submit manufacturer's data for joint restraint systems, mastic coating, couplings and sleeves, bolts and nuts for mechanical and flanged joints, polyethylene encasement, tracer wire, solder, electrical insulation putty, electrical tape, anodes and insulation.

501.6.2.2 Thrust Blocks

Thrust blocks shall be constructed of concrete having a minimum 28 day compressive strength of 2,000 psi. The minimum cement content shall be 423 lbs. (4½ bags) of cement per cubic yard of concrete. The maximum allowable slump shall be 5 inches.

501.6.2.3 Joint Restraint Systems

Joint restraint systems shall, as a minimum, be designed to restrain the pipe or fitting when subjected to the full pressure rating of the pipe or fitting with a factor of safety of 2. Joint restraint systems for mechanical joints shall be provided by wedge action retainer gland. Gland and wedges shall be ASTM A 536 ductile iron. Wedge action restrainer glands for polyvinyl chloride pipe shall be EBAA Iron Series 2000 PV, Uni-Flange Series 1500, Sigma One-Lok™ SLCE, Star Pipe Products Stargrip® Series 4000, or Tyler Union TufGrip™ Series 2000. Wedge action restrainer glands for ductile iron pipe shall be EBAA Iron Series 1100, Uni-Flange Series 1400, Sigma One-Lok™ SLDE, Star Pipe Products Stargrip® Series 3000, or Tyler Union TufGrip™ Series 1000.

501.6.2.4 Corrosion Protection Coating

Corrosion protection coating shall be an aerosol asphalt coating. Corrosion protection coating shall be 3M Undercoating Black 08881 or equal.

501.6.2.5 Mechanical Pipe Couplings

Mechanical pipe couplings for joining ductile iron or polyvinyl chloride pipe of the same outside diameter shall be Dresser Style 253 or Smith-Blair Type 441 for pipes 16-inch diameter and smaller. Mechanical pipe couplings for joining ductile iron or polyvinyl chloride pipe of the same outside diameter shall be Smith-Blair Type 411 for pipes 16-inch diameter and larger.

Mechanical pipe couplings for joining pipe of different outside diameter for 4-inch to 12-inch ductile iron pipe shall be Dresser Style 162. Mechanical pipe couplings for joining pipe of different material or outside diameter for 3-inch to 16-inch ductile iron or polyvinyl chloride pipe shall be Smith-Blair Type 441 or equal. Mechanical pipe couplings for joining pipe of different outside diameter for 3-inch to 24-inch ductile iron pipe shall be Dresser Style 62. Mechanical pipe couplings for joining pipe of different material or outside diameter for 3-inch to 24-inch diameter ductile iron or polyvinyl chloride pipe shall be Smith-Blair Type 413 or equal. Mechanical pipe couplings for joining ductile iron or polyvinyl chloride pipe to pit cast or centrifugally spun cast iron pipe with a larger outside diameter shall be Smith-Blair Type 441, Dresser Style 253, Ford Style FC2A, or Romac Style 501. Mechanical pipe couplings shall be epoxy coated. Mechanical pipe couplings shall meet the requirements of AWWA C219. Bolts, nuts, and gaskets shall be furnished by the coupling manufacturer. Gaskets shall be suitable for the intended service.

501.6.2.6 Sleeves

Sleeves shall be ductile iron with mechanical joint ends and shall meet the requirements of AWWA C153. Sleeves shall be cement-mortar lined in accordance with AWWA C104 (ANSI A21.4). The exterior of sleeves shall have an asphaltic coating. Cutting-in sleeves shall provide a minimum of 10 inches of adjustment. Dual-sleeves shall be suitable for use with Class "B" and Class "D" pit cast bell and spigot cast iron pipe. Solid sleeves shall be long pattern style.

501.6.2.7 Bolts and Nuts

Bolts and Nuts for mechanical joints shall be tee-head bolts and hexagonal nuts conforming to the requirements of AWWA C111. Bolts and nuts shall be high-strength, low-alloy steel. Bolt shanks shall be straight within $^{1}/16$ -inch per 6 inches in length. Bolts and nuts shall be sound, clean, and coated with a rust-resistant lubricant. The surface of the bolts and nuts shall be free of protrusions that would interfere with their fit in the make-up of the mechanical joint.

501.6.2.8 Polyethylene Encasement

Polyethylene encasement shall meet the requirements of AWWA C105 (ANSI A21.5). Encasement shall be a linear low density polyethylene film with a nominal thickness of 8 mils; or a high density, cross-laminated polyethylene film with a minimum tensile strength of 5,000 psi and a nominal thickness of 4 mils.

501.6.2.9 Tracer Wire

Tracer wire shall be a National Electric Code Type THWN, 600 volt, continuous, single-strand #12 AWG copper or copper-clad steel-core wire with a continuous blue 30 Mil HDPE insulation coating. Tracer wire shall be Southwire 12/1 Solid THNN/THWN, Copperhead SuperFlex SF-CSS, or equal.

Solder shall be a self-flux, 50-50 rosin core solder. Electrical insulation putty shall be Scotchfil™ Electrical Insulation Putty as manufactured by 3M Electrical Markets Division. Electrical tape shall be Scotch Super 33+™ as manufactured by 3M Electrical Markets Division.

501.6.2.10 Anodes
501.6.2.10.1 Stick Anodes

Stick anodes shall be extruded magnesium anodes. Stick anodes shall be a minimum of 12-inches long. Stick anodes shall be a 0.5 pound anode with a polyethylene cap and 3 feet of exposed #12 AWG tracer wire. Stick anodes shall be SuperROD Drive-In Anode Model GA-MG-0.5DR as manufactured by Galvotec Alloys, Inc.; Stuart Spike as manufactured by Stuart Steel Protection; or equal.

501.6.2.10.2 Bag Anodes

Bag anodes shall be high potential magnesium anodes in prepared backfill. Bag anodes shall have a 5 pound sacrificial anode packed with backfill inside a cotton sack with 10 feet of exposed #12 AWG tracer wire. The magnesium anode shall meet the requirements of ASTM B843 alloy M1C. Bag anodes shall be High Potential Magnesium Anode Model 5D3 as manufactured by Stuart Steel Protection, High Potential Magnesium Anodes SuperMAG GA-MG-5 HP Model 5D3 as manufactured by Galvotec Companies, or equal.

501.6.2.11 Insulation

Insulation used for frost prevention shall be extruded polystyrene foam insulation with a minimum thickness of 2 inches with a minimum "R" value of 10.0 (at 75 degrees Fahrenheit mean temperature). Insulation shall have a minimum compressive strength of 25 psi.

501.6.3 Construction Methods
501.6.3.1 Laying of Pipe
501.6.3.1.1 General

The Contractor shall not install any pipeline when the weather or trench conditions are unsuitable for pipeline construction as determined by the Engineer. The Contractor shall stop water main pipeline installation immediately and notify the Engineer if contaminated soil conditions are suspected or found to exist in any water facility trench. Polyvinyl chloride pipe shall not be installed in any contaminated soil area. The pipeline installation may only proceed upon approval from the Engineer.

501.6.3.1.2 Alignment and Grade

The Contractor shall install the water main pipeline as closely as possible to the alignment and grade that is shown on the plans. If no grade is shown on the plans, the new water main pipeline shall have a minimum cover of 6½ feet from final grade, unless otherwise noted. The Contractor shall use a rotary, or point-to-point, laser leveling system to help ensure that the water main is being installed at the proper grade. Adjustments in alignment or grade may need to be made if conflicts occur with other existing facilities. These adjustments shall be approved by the Engineer prior to making the adjustment.

501.6.3.1.3 Handling of Pipe and Fittings

The Contractor is responsible for unloading, distributing, storing, protecting and examining all materials delivered to the job site. The Contractor assumes the responsibility of protecting and storing the materials and equipment as if the materials and equipment were his own once the Contractor takes possession of the materials and equipment. The Contractor shall have sufficient and adequate equipment on the site of the work for unloading and stacking pipe, and for lowering pipe and fittings into the trench. The Contractor shall stockpile the pipe in such a manner that will insure that the inside and outside of the pipe are free of dirt and other contaminants. The Contractor shall not string the water main pipe along the proposed installation route unless authorized by the Engineer. The Contractor shall exercise extreme care in handling all pipe, fittings, and special castings so as to prevent breakage and coating damage. Metal cables, hooks, or pipe tongs shall be padded and used properly to prevent damage to all pipe and appurtenances. Any significant damage, caused by the Contractor, to the coatings or the castings of all pipe and fittings shall be repaired or replaced by the Contractor, as required by the Engineer, at no additional cost to the Owner. Under no circumstances shall pipe or fittings be dropped into the trench or so handled as to receive hard blows or jolts.

Every precaution shall be taken to prevent foreign materials from entering the pipe while it is being placed in the line. If the pipe cannot be placed in the trench without earth entering, the Engineer may require a heavy, tightly woven canvas bag of suitable size, an inflatable test-ball plug of suitable size, or a cast plug be placed over each end and left until the connection is to be made to the adjacent pipe. During the laying operations, no debris, tools, clothing or other materials shall be placed in the pipe.

501.6.3.1.4 Direction of Laying

Pipe shall be laid with the bell ends facing the direction of lying, unless otherwise approved by the Engineer.

501.6.3.1.5 Cleaning of Pipe and Fittings

No debris, hand tools, clothing, or other materials shall be placed in the pipe during installation operations. The interior and exterior of all pipe and fittings shall be clean and free from all foreign material before being installed. All mud or concentration of dirt shall be removed prior to installation. The Contractor shall provide the necessary means to wipe, brush, swab, or air blast to remove any foreign material from the interior and exterior of the pipe and fittings as required by the Engineer.

501.6.3.2 Protection of Open Pipe

At all times when pipe laying is not in progress, the open ends of pipe shall be closed by a watertight plug or cap provided by the Contractor. This provision shall apply during the work breaks as well as overnight. If water is in the trench, the seal shall remain in place until the trench is pumped completely dry. No pipe shall be laid in water or when trench conditions are unsuitable.

501.6.3.3 Thrust Restraint

All pressure piping shall be provided with a thrust restraint system to prevent movement caused by hydraulic thrust and pressure. A joint restraint system shall be provided on all fittings and sleeves. All exposed pressure pipe shall have restrained joints. All vertical buried pressure piping shall have a joint restraint system. A joint restraint system shall be provided as required for all horizontal buried pressure piping unless satisfactory restrained length cannot be obtained, then the contractor shall provide a thrust block. The Contractor shall provide joint restraint systems for joint restraint lengths shown on the plans or as required by the Engineer.

The bearing area for thrust blocks shall be as shown on the drawings or as required by the Engineer. Thrust blocks shall be cast against solid undisturbed ground and shall be installed so as to prevent contact or interference with pipe or fitting joints. Fittings shall be wrapped in polyethylene encasement to prevent the concrete from bonding to the surface of the fitting.

501.6.3.4 Connections to Existing Pipelines

The Contractor shall expose the portion of the existing pipeline where the connection will be made and verify or determine the type of material, the outside diameter, and the elevation of the existing pipeline and the location and type of any exposed joints. The existing pipeline information shall be immediately submitted to the Engineer for review. The Engineer will determine if adjustments in alignment or grade are needed for the proposed pipeline and if extra fittings will be needed or if proposed fittings can be deleted. The Contractor shall proceed with the connection as soon as the Engineer has established the final alignment and grade for the proposed connection.

Cut-in connections to cast iron, ductile iron, or polyvinyl chloride pipelines 12 inch diameter and smaller shall be made with a cutting-in sleeve, solid sleeve, or dual-sleeve. Connections to cast iron, ductile iron, or polyvinyl chloride pipelines 14 inch diameter and larger shall be made with a mechanical pipe coupling.

Connections to pipe with standard AWWA outside diameters shall be made with a one sleeve or mechanical pipe coupling. Connections to cast iron pipe with non-standard outside diameters shall be made with two sleeves or mechanical pipe couplings.

501.6.3.5 Protection of Buried Metal Surfaces

All steel clamps, rods, bolts, mechanical pipe couplings, flanges, sleeves and metal accessories installed underground shall be protected with a corrosion protection coating. Surfaces shall be cleaned by wire brushing immediately prior to application of the corrosion protection coating. The corrosion protection coating shall be sprayed on all bolts, nuts, rods, clamps, straps, and flanges; and built-up to a uniform thickness over the entire metal surface. Materials shall be applied in full accordance with manufacturer's recommendations.

501.6.3.6 Joining Pipe of Different Material or Outside Diameter

Where specified or required, pipes of different material or outside diameter shall be joined with mechanical pipe couplings. Couplings shall be suitable for the intended service and shall be installed in accordance with the manufacturer's instructions.

501.6.3.7 Water Main Pipe Insulation

All water main and water service pipelines constructed within 6 feet of the ground surface or within two vertical feet of a storm sewer shall be protected from frost with insulation. The minimum width of insulation varies with the depth of ground cover as shown in the following table:

DEPTH OF WATER MAIN PIPELINE (FT.)	MINIMUM WIDTH OF INSULATION (FT.)
3.0	7
3.5	6
4.0	5
4.5	4
5.0	3
5.5	3
6.0	3

The sheet insulation shall be placed immediately above the bedding section or a minimum of 6 inches above the pipeline as required by the Engineer. Insulation shall extend the entire width of the trench or the minimum required width, whichever is greater.

501.6.3.8 Polyethylene Encasement

Unless otherwise noted, all ductile iron pipes shall be protected from corrosion by use of a polyethylene wrap installed in accordance with AWWA C105. All ductile iron push-joints shall be protected from corrosion by two layers of polyethylene wrap. The two layers of polyethylene wrap shall extend two feet past the joint in both directions.

All ductile iron fittings, valves, and appurtenances shall be protected from corrosion by two layers of polyethylene wrap installed in accordance with AWWA C105. The polyethylene wrap shall extend a minimum of two feet past all joints.

501.6.3.9 Tracer Wire
501.6.3.9.1 General

Tracer wire shall be installed with all water main, hydrant branches, and water service pipelines. The tracer wire shall be securely attached with tape along the centerline of the top of the pipe. Any exposed wire shall be sealed and covered with Water Utility approved materials. A tracer wire shall extend along all water pipelines and shall be brought to grade at all hydrant locations and at select valve box locations as determined by the Engineer. A continuity test shall be performed for on all tracer wire. All tracer wire failing the continuity test shall be repaired and the test shall be repeated.

A stick anode shall be provided where a tracer wire terminates below grade and does not connect to an existing tracer wire. A stick anode shall be provided at all curb stops. A stick anode shall be provided where noted on the drawing. The Contractor shall provide a bag anode at all connection points to existing metal water services.

501.6.3.9.2 Tracer Wire Splice Connections

The new tracer wire shall be connected to the existing tracer wire when the existing pipeline has a tracer wire. Tracer wire main run connection splices shall be made with a typical Western Union-type soldered splice. Each tracer wire end shall be twisted around the main run wires once and then each loose wire end shall be tightly wrapped a minimum of 4 times around the main run wire. Wire splices shall be soldered and tightly wrapped with electrical insulation putty and electrical tape so that no copper wire is exposed.

501.6.3.9.3 Hydrant Tracer Wire Access Points

Tracer wire at hydrants shall be installed along the outside of the hydrant barrel with 36 inches of excessive tracer wire. The tracer wire along the hydrant barrel shall be inserted in a 24-inch long, 1-inch polyvinyl chloride conduit, which would extend 2 inches above the breakaway flange and the owner will trim to finished grade after final restoration. The tracer wire shall be tie-wrapped to the hydrant. The tracer wire shall be wrapped around the hydrant barrel three times just below the breakaway flange and reinserted into the conduit.

501.6.3.9.4 Valve Boxes Tracer Wire Access Points

When required by the engineer, tracer wire at select valve boxes shall extend vertically along the outside of the valve box with 36 inches of excess wire. The end of the wire shall be installed inside the top of the valve box through a 3-inch deep slot that the contractor shall cut into the top section of the valve box at a point that is perpendicular to the adjusting tool notches.

501.6.3.9.5 Water Services

Tracer wire shall be installed along the top of water services when the water service is longer than 5 feet, unless otherwise approved by the Engineer. The Contractor shall splice the main line

tracer wire at water services. Branch tracer wire splice connections shall be made by stripping the plastic insulation off the main run tracer wire with a stripping tool. The branch tracer wire end shall be tightly wrapped around the main run tracer wire a minimum of 8 times. Wire splices shall be soldered and tightly wrapped with electrical insulation putty and electrical tape so that no copper wire is exposed.

501.6.3.10 Tracer Wire Circuit Testing

The Water Utility will test the electrical continuity of the tracer wire after the Contractor has completed the water pipeline installation. The Contractor shall be responsible for all costs of any repairs that may be required to establish the electrical continuity of the tracer wire circuit.

501.7 Pressure Testing of Water Mains
501.7.1 General

Pressure testing of water mains includes all labor, materials, and equipment as required or necessary to hydrostatically test pipelines as shown and specified.

501.7.2 General Requirements
501.7.2.1 Test Pressure

All water main pipelines shall be tested by the Contractor and shall successfully pass a hydrostatic test composed of a pressure test and a leakage test. Pressure tests and leakage tests shall be made at 125 p.s.i., unless otherwise noted. All pressure testing shall be performed in the presence of the water utility inspector.

501.7.3 Testing Procedure
501.7.3.1 General

Pipelines shall have a pressure test followed by a leakage test. If it is found unnecessary to add water to maintain pressure for the duration of the pressure test, the leakage test may be waived with the approval of the Engineer. **Fire hydrants and flush hydrants shall not be used as connection points for hydrostatic testing.**

501.7.3.2 Pressure Test

After the test connections are made and the pipeline is filled with potable water, the test section shall be subjected to the normal working pressure of the area. After examination of exposed parts of the system, the test pressure will be increased to 125 p.s.i. at the lowest elevation point of the section being tested. The pipeline shall be examined and if any defects are found, the Contractor shall immediately make the necessary repairs at his own expense. The pressure test shall be repeated until no defects can be found. The duration of the final pressure test shall be not less than two continuous hours.

501.7.3.3 Leakage Test

The leakage test shall be conducted after satisfactory completion of the pressure test. The test section shall be subjected to 125 p.s.i. at the lowest elevation point of the section being tested. Leakage is defined as the quantity of water to be supplied into the newly laid pipe, or any valved section of it, necessary to maintain the specified leakage test pressure after the pipeline has been filled with water and the air expelled. The duration of the final leakage test shall be not less than two continuous hours.

Leakage shall not exceed the number of gallons per hour as determined by the following formula for the duration of the test.

$$L = (S \times D \times P^{1/2}) \div 148{,}000$$

L - allowable leakage in gallons per hour
S - length of pipe tested in feet
D - nominal diameter of pipeline in inches
P - average test pressure in pounds per square inch (gauge)

Leakage for exposed piping (not buried) shall be zero throughout the duration of the test. Should any test section fail to meet the leakage test, the Contractor shall immediately make the necessary repairs at his own expense.

501.8 Disinfection of Water Mains
501.8.1 General

This subsection describes disinfection of water mains. Disinfection of water mains include all labor, materials, equipment, and services necessary to disinfect, flush, and test pipelines, as shown and specified. The Contractor shall comply with all applicable AWWA and governmental requirements; as well as all manufacturer recommendations and specifications for proper installation and disposal of materials.

501.8.2 Submittals

The Contractor shall submit a procedure for disinfecting and flushing the pipelines for review prior to performing the work. Disinfection shall be in accordance with AWWA C651 and Wisconsin Administrative Code NR 810(4) and NR 811.73.

501.8.3 Materials

Sodium hypochlorite solution or calcium hypochlorite granules shall be used for disinfection.

501.8.3.1 Sodium Hypochlorite Solution

Sodium hypochlorite solution shall contain 5 percent to 15 percent available chlorine and shall be packaged in glass, rubber-lined, or plastic containers, one quart to five gallons in size.

501.8.3.2 Calcium Hypochlorite

Calcium hypochlorite shall contain approximately 65 percent available chlorine by weight and shall be granular form.

501.8.4 Construction
501.8.4.1 Disinfecting
501.8.4.1.1 Granular Method

Granular method shall consist of placing calcium hypochlorite granules in the pipeline as it is being installed. Pipes and fittings must be kept clean and dry during construction. The quantity of granules shall be as shown in Table 1.

Table 1: Weight of Calcium Hypochlorite Granules to be Placed at Beginning of Pipeline and at Each 500 Foot Interval

Pipe Diameter (inches)	Calcium Hypochlorite Granules (ounces)
4	1.7
6	3.8
8	6.7
12	15.1
16 and larger	D^2 x (15.1)

Where D is the inside diameter of the pipe measured in feet

When installation has been completed, the pipeline shall be filled with water at a rate such that water within the pipeline will flow at a velocity no greater than 1 foot per second and all air pockets are eliminated. The water shall remain in the pipe for at least 24 hours. All valves shall be positioned so that the strong chlorine solution in the treated pipeline will not flow into pipelines in active service.

501.8.4.1.2 Continuous-feed Method

Calcium hypochlorite granules shall be placed in the pipe sections using the granular method. A preliminary flushing of the pipeline shall be performed to remove particles and the pipe shall be refilled with potable water. The flushing velocity shall be a minimum of 3.0 feet per second in the pipeline. A chlorine solution shall be injected in the pipeline at a point no more than 10 feet downstream of the beginning of the new pipeline. The chlorine solution shall be added at a constant rate such that the water shall have not less than 25 mg/l of free chlorine. Chlorine application shall not stop until the entire pipeline is filled with heavily chlorinated water. At the end of a 24-hour period, the treated water shall have a residual of not less than 10 mg/l free chlorine.

501.8.4.1.3 Slug Method

Calcium hypochlorite granules shall be placed in the pipe sections using the granular method. A preliminary flushing of the pipeline shall then be performed to remove particles and the pipe

shall be refilled with potable water. The flushing velocity shall be a minimum of 3.0 feet per second in the pipeline. A chlorine solution shall then be injected in the pipeline at a point not more than 10 feet downstream of the beginning of the new pipeline. The chlorine solution shall be added at a constant rate such that the water shall have not less than 100 mg/l of free chlorine. The chlorine shall be applied continuously and for a sufficient period to develop a solid concentration or "slug" of chlorinated water that will, as it moves through the pipeline, expose all interior surfaces to a concentration of 100 mg/l for at least 3 hours. Free chlorine residual shall be measured as the slug moves through the pipeline. If the concentration falls below 50 mg/l the flow shall be stopped and the chlorination equipment shall be located ahead of the slug. Chlorine shall be added to the slug until a concentration of 100 mg/l is obtained.

501.8.4.2 Final Flushing

Final flushing of the pipeline shall not commence until after the required retention period for disinfection. Heavily chlorinated water shall not remain in the pipeline for prolonged periods. The Contractor is responsible to flush the pipeline in accordance with Wisconsin Administrative Code NR 811.73.

The Contractor shall inspect the area that the chlorinated water will be discharged. If there is any question that the chlorinated discharge will cause environmental damage, the Contractor shall furnish and apply a chlorine reducing agent to the water that is to be wasted, in order to thoroughly neutralize the chlorine residual remaining in the water. If for any reason simply neutralizing the chlorine residual in the discharged water is not an option, the Contractor shall be responsible for properly disposing of the chlorinated water. The Contractor is responsible to contact any federal, state, and local regulatory agencies in order to determine special provisions for the disposal of heavily chlorinated water.

If disposal of heavily chlorinated water requires discharge into the sanitary sewer, the Contractor shall obtaining approval from the City of Green Bay Department of Public Works, or the owner of the facility, and shall complete the flushing process as required by the facility owner.

501.8.5 Testing

A minimum of two sets of bacteriological safe samples shall be obtained before the water main may be placed into service. The contractor shall provide sample locations after final flushing for obtaining water samples. The Water Utility will obtain the required sets of water samples and provide testing to determine bacteriological safe samples. The Water Utility will choose either of the two following options for obtaining the two sets of bacteriological safe samples.

Option 1: The Water Utility will take a first set of samples immediately after final flushing and then resample at the same locations again after a minimum of 16 hours.

Option 2: The Water Utility will take the first set of samples a minimum of 16 hours after final flushing and then resample at the same locations again after a minimum of 15 minutes while the sampling taps are left running.

If the initial disinfection fails to produce two consecutive safe bacteriological samples, the Contractor shall reflush the pipeline. The Water Utility will resample and retest the pipeline. If the retest samples fail, the Contractor shall rechlorinate the pipeline using the continuous-feed or slug method of chlorination until safe water results are obtained.

501.9 Temporary Air Release Assemblies
501.9.1 General

Temporary air release assemblies may be required after an existing water main modification. Temporary air release assemblies include all labor, materials, and equipment necessary to furnish and install bedding, backfill, and blocking; to install and remove a temporary air release assembly including corporation stop, curb stop, service piping, couplings, and plug. Temporary air release assemblies shall be installed as shown and specified on the plans or as required by the Engineer.

501.9.2 Materials

The Water Utility will furnish all materials for the temporary air release assemblies.

501.9.3 Construction Methods

A temporary air release assembly shall consist of a 1-inch or 3/4-inch corporation stop and may require installation and removal service pipe and curb stop. The Contractor shall comply with all applicable AWWA and manufacturer recommendations and specifications for proper installation of materials.

501.9.3.1 Joining Pipe

The pipe shall be joined with compression type fittings in accordance with the manufacturer's instructions for the fittings provided. All ends shall be cut squarely and rough edges of burrs removed.

501.9.3.2 Bedding

Unless otherwise noted, temporary air release assemblies shall have Green Bay Water Utility pipeline bedding.

501.9.3.3 Connection to Water Main
501.9.3.3.1 Cast Iron and Ductile Iron Water Main

Corporation stops shall be tapped directly on the top of cast iron and ductile iron water main. Taps shall be made in accordance with the preferred method listed in AWWA C600 Section 4.6 (Figure 5). The tap shall be made by using the appropriate tapping machine, tools, and methods. The tap for the corporation stop shall be located a minimum of 2 feet from any pipe or fitting joint and shall have a minimum of 2 feet of clearance between taps.

501.9.3.3.2 Polyvinyl Chloride Water Main

Corporation stops shall be installed using service saddles on the top of the polyvinyl chloride water main in accordance with the method listed in AWWA C605 Section 6.4.2. The Contractor's drilling machine shall have a core-cutting tool of the shell design that retains the coupon cut while penetrating the pipe wall. Twist drill bits and auger bits shall be prohibited when tapping polyvinyl chloride pipe. The Contractor shall adhere to the recommended safety precautions in AWWA C605 Section 6.4.3 when tapping a polyvinyl chloride pipe. The tap for the corporation stop shall be located a minimum of two feet from any pipe or fitting joint and shall have a minimum of two feet of clearance between taps.

501.10 Bulkheading of Abandoned Pipelines

501.10.1 General

Bulkheading of abandoned pipelines includes all labor, materials, equipment, and services necessary to properly bulkhead any water pipelines that are to be abandoned as shown on the plans, any exposed conduit or pipe that is in the water main excavation, or any other exposed pipe as required by the Engineer.

501.10.2 Construction Methods

The Contractor shall cut off and bulkhead the exposed abandoned pipe at the limits of the excavation, unless the pipe is damaged further into the soil bank, in which case the Contractor shall excavate to such a point that is deemed necessary by the Engineer, to properly cut off and bulkhead the abandoned pipe. The pipe shall be plugged with a cap, plug, or two feet of concrete.

501.11 Bridging of Existing Pipes

501.11.1 General

Bridging of existing pipes includes all labor, materials, equipment, and services necessary to properly support the water main when installation requires excavation that is within 6 inches over the top of any pipe or when required by the Engineer.

501.11.2 Construction Methods

The contractor shall furnish and install 4x8x16 inch solid concrete blocks on undisturbed or +95% compacted soil, in sufficient number to adequately support the water main, to the satisfaction of the Engineer, over the top of any existing pipes when the water main installation requires excavation that is within 6 inches of the top of the pipe or when required by the Engineer.

501.12 Measurement and Payment

No separate payment will be made for work in this section. All costs involved with work in this section shall be included in the unit price of the associated work.

Page Intentionally Left Blank

SECTION 502

BORING AND JACKING

502.1 General

This section describes construction of water main pipe installed by boring and jacking. Boring and jacking includes all plant, labor, materials, and equipment as required or necessary to furnish and install steel casing pipe, grout, casing spacers, and end seals; and to furnish, install and test carrier pipes as shown and specified.

502.2 Materials
502.2.1 Submittals

The Contractor shall submit manufacturer's data for the casing pipe. Information shall include the name of the pipe manufacturer, the dimensions of the pipe, and details on the materials and method of pipe manufacture or fabrication.

The Contractor shall submit a jacking plan for each installation. The plan shall identify the method and equipment to be used, the location and size of the jacking pits, and the limits of the proposed jacking.

502.2.2 Casing Pipe

Casing shall be steel pipe conforming to ASTM A53 Grade B, ASTM A139 Grade B, or pipe fabricated in accordance with AWWA C200 using ASTM A36 steel. The minimum inside diameter of the casing shall not be less than 4 inches larger than the maximum outside diameter of the carrier pipe. The minimum wall thickness shall be as required by permit requirements or the Contractor's method of construction, whichever is greater, but in no case shall it be less than the following values.

MINIMUM CASING SIZE O.D. in INCHES	MINIMUM WALL THICKNESS - INCHES WATERWAY / HIGHWAY CROSSING	MINIMUM WALL THICKNESS - INCHES RAILWAY CROSSING
20	0.1875 (3/16)	0.344 (11/32)
24	0.250 (1/4)	0.375 (3/8)
30	0.3125 (5/16)	0.469 (15/32)
36	0.375 (3/8)	0.531 (17/32)
42	0.500 (1/2)	0.625 (5/8)

502.2.3 Carrier Pipe
502.2.3.1 Polyvinyl Chloride Pipe

Polyvinyl chloride (PVC) carrier pipe up to and including 12-inch pipe shall meet the requirements of AWWA C900 for bell end pipe with elastomeric-gasket joints. Polyvinyl

chloride carrier pipe for 16-inch pipe shall meet the requirements of AWWA C905 for bell end pipe with elastomeric-gasket joints. Pipe shall have the same outside diameter as ductile iron pipe. Pipe shall be pressure Class 235 (DR 18), unless otherwise noted. Pipe shall have restrained joints. Polyvinyl chloride carrier pipe shall be Eagle Loc 900™, Diamond Lok-21®, CertainTeed Certa-Lok C900 RJ or C905 RJ, or equal.

502.2.3.2 Ductile Iron Pipe

Ductile iron carrier pipe 20-inches and greater shall meet the requirements of AWWA C151 (ANSI A21.51). Pipe shall be thickness Class 52, unless otherwise noted. Pipe shall have restrained joints. Restrained joints shall meet the applicable requirements of AWWA C111 (ANSI A21.11). The joint shall provide for a minimum deflection of not less than three degrees. The joint shall be capable of providing full restraint for the thrust generated at the rated working pressure of the pipe. Pipe shall be cement-mortar lined in accordance with AWWA C104 (ANSI A21.4). Cement-mortar lining shall be standard thickness, unless otherwise specified. The exterior of the pipe shall have an asphaltic coating. Ductile iron carrier pipe shall be Griffin Snap-Lok or Bolt-Lok; Clow Super-Lok Joint; American Flex-Ring, Lok-Ring, or Lok-Fast Joint; U.S. Pipe TR FLEX; or equal.

502.2.4 Casing Spacers

Casing spacers shall consist of a two-piece shell a minimum of 8” long with a minimum of 4 risers. Casing spacers shell and risers shall be made from AISI Type 304 stainless steel. Each shell section shall be lined with a ribbed polyvinyl chloride extrusion with a retaining section that overlaps the edges of the shell and prevents slippage. Runners shall be glass reinforced nylon or ultra high molecular weight polyethylene. The runners shall be mechanically bolted to the riser with AISI Type 304 stainless steel fasteners. Casing spacers shall be designed to nominally center the carrier pipe in the casing pipe and to restrain the carrier pipe against floatation or surge pressure buckling. Casing spacers shall be Model CCS as manufactured by Cascade Waterworks Mfg. Co., Model 4810 as manufactured by PowerSeal Pipeline Products Corporation, or equal.

502.2.5 Casing End Seals

Casing end seals shall be a pull-over or wrap-around type construction and made from elastomeric rubber with T-304 stainless steel bands for securing the ends of the end seal to the casing pipe and carrier pipe. Casing end seals shall be Model CCES as manufactured by Cascade Waterworks Mfg. Co., End Seal as manufactured by PowerSeal Pipeline Products Corporation, or equal.

502.2.6 Cement Grout
502.2.6.1 General

Cement grout shall be composed of cement, sand, admixtures, and water proportioned and mixed as specified. Cement shall be Type II Portland cement conforming to ASTM C150. Sand shall conform to ASTM C33 and shall be graded so that 100 percent by weight will pass a 3/8”-inch U.S. Standard Sieve, and at least 45 percent by weight will pass a No. 40 U.S. Standard Sieve. Grout shall be used for pressure grouting and dry pack grouting as applicable.

502.2.6.2 Mix Design

Cement grout shall be a mixture of one part cement to two parts sand with a water/cement ratio of 0.55. Dry pack grout shall be a mixture of one part cement, two parts sand, and the minimum amount of water required for mixing and placing.

502.3 Construction Methods

502.3.1 General

The Contractor shall comply with all applicable AWWA and manufacturer recommendations and specifications for proper installation of materials.

The Contractor shall construct a jacking pit of sufficient size to accommodate the backstop, jacks, pushing frame and pipe to be jacked. The pit shall have guide rails or timbers to keep the pipe in alignment and on grade. A push frame shall be provided to evenly distribute the jacking pressure to protect the ends of the pipe being jacked. A minimum of two hydraulic jacks shall be used. The casing pipe shall be fitted with a hardened steel cutting edge. The casing shall be jacked upgrade, if possible, to facilitate drainage. All pipe shall be on site before jacking work is started.

502.3.2 Casing Installation

The casing shall be pushed into place as the soil is excavated from the inside of the pipe. The excavation shall not precede the leading edge of the casing unless it is necessary to remove a large obstruction. Excavation for small diameter casing shall be accomplished by a boring auger. Excavation for large diameter casings shall be accomplished by hand or mechanical means. Once the jacking operation is started it shall be continued without interruption until completion. Casing pipes shall be joined with a continuous weld for the full circumference. The welded joints shall be capable of resisting all jacking stresses.

The casing pipe in its final position shall be straight and true in alignment and grade. There shall be no space between the earth and the outside of the casing. If it is necessary to over excavate, the location shall be identified and pressure grouted after the casing is in place.

502.3.3 Carrier Pipe Installation

The carrier pipe shall be installed after the casing pipe has been installed and accepted by the Engineer. Polyvinyl chloride carrier pipe shall have not less than four casing spacers per pipe section with a maximum spacing of 6 feet. Ductile iron carrier pipe shall have not less than three casing spacers per pipe section with a maximum spacing of 9 feet. Casing spacers shall be located within 1 foot of both sides of the bell.

The casing spacers shall be securely installed on the carrier pipe. The casing spacers shall be sized so that the carrier pipe will meet the line and grade as indicated on the drawings and be centered as close as possible in the casing. The carrier pipe shall be pushed and pulled in place in such a manner that there is no opportunity for a joint to be opened. The carrier pipe length shall be adjusted so that the end extends past the end of the casing 12 to 18 inches.

502.3.4 Pressure Grouting

Pressure grouting, where required, shall be done by qualified mechanics under supervision of experienced foremen. The apparatus for mixing and placing cement grout shall be of a type acceptable to the Engineer and shall be capable of effectively mixing and stirring the grout and forcing it into the holes or grout connections in a continuous, uninterrupted flow at any specified pressure up to a maximum of 15 pounds per square inch. Gages shall be provided, with an accurate meter reading in cubic feet to tenths of a cubic foot, for controlling the amount of mixing water used in the grout. In addition to the grout mixer, holdover mechanical agitator tanks shall be provided. All grout shall be pumped with a duplex piston-type pump.

Prior to grouting, systems and holes to be grouted shall be thoroughly washed clean. No washing will be required for grouting soil voids outside the casing pipes. Grouting, once started, shall be completed without stoppage. In case of breakdown of equipment, the Contractor, at the Engineer's options, shall wash out the grouting system. Grout pressure shall be maintained until grout has set.

502.3.5 Casing End Seal Installation

A casing end seal shall be installed on each end of the casing pipe to seal the annular space between the carrier pipe and the casing pipe. The casing end seal shall be installed according to the manufacturer's instructions.

502.4 Testing

The carrier pipe shall have a hydrostatic test composed of a pressure test and a leakage test after the carrier pipe and casing end seals are installed. The carrier pipe may be tested separately or with the associated pipeline segment.

502.5 Measurement and Payment

502.5.1 Mobilization and Demobilization

The lump sum price in the proposal schedule for mobilization and demobilization of boring and jacking equipment shall include all plant, labor, materials, and equipment as necessary to install and remove the boring and jacking equipment, provide access to the site, maintain site drainage, provide dust abatement, provide construction utilities, construct and fill jacking and access pits, clean up the site, and all incidentals necessary to complete the work, as shown and specified. After the equipment is set up and ready for use 60 percent of the amount shall be paid. The remaining 40 percent of the amount shall be paid after the equipment is removed from the site and clean up is complete.

502.5.2 Casing and Carrier Pipe

The unit price in the proposal schedule for the construction of casing and carrier pipe shall be per horizontal lineal foot for the size and type specified. The unit price shall include all labor, materials, and equipment required to furnish and install casing pipe, casing spacers, casing end seals, and grout, if required; and to furnish, install, and test the carrier pipe as shown and specified.

The City will pay for measured quantities at the contract unit price under the following bid items:

ITEM #	DESCRIPTION	UNIT
502.01	Mobilization & Demobilization for Boring	EACH
502.02	8” PVC Carrier in 20” Standard Casing	LF
502.03	8” PVC Carrier in 20” Extra Thick Casing	LF
502.04	12” PVC Carrier in 20” Standard Casing	LF
502.05	12” PVC Carrier in 20” Extra Thick Casing	LF
502.06	16” PVC Carrier in 24” Standard Casing	LF
502.07	16” PVC Carrier in 24” Extra Thick Casing	LF
502.08	20” DI Carrier in 30” Standard Casing	LF
502.09	20” DI Carrier in 30” Extra Thick Casing	LF
502.10	24” DI Carrier in 36” Standard Casing	LF
502.11	24” DI Carrier in 36” Extra Thick Casing	LF

Page Intentionally Left Blank

SECTION 503

HORIZONTAL DIRECTIONAL DRILLING

503.1 General

This section describes construction of water main pipe installed by horizontal directional drilling. Horizontal directional drilling includes all plant, labor, materials, and equipment as required or necessary to drill holes and furnish, install, and test pipe for the construction of pipelines and appurtenances as shown and specified.

503.2 Materials

503.2.1 Submittals

The Contractor shall submit a drilling plan for each installation. The plan shall identify the method and equipment to be used, the location and size of the access pits, the limits of the proposed drilling, and the method of field verifying the location and elevation of the existing utilities and the pipeline being installed. The Contractor shall select the wall thickness for the pipe that will withstand the pulling forces exerted on the pipe. The Contractor shall submit the wall thickness required for the pipe to the Engineer.

503.2.2 Water Main Pipe

Water main pipe up to and including 12-inch shall be polyvinyl chloride (PVC) and meet the requirements of AWWA C900. Water main pipe for 16-inch pipe shall be polyvinyl chloride and meet the requirements of AWWA C905. Pipe shall be pressure Class 235 (DR 18), unless otherwise noted. The pipe shall have the same outside diameter as ductile iron pipe. The color of the outside of the pipe shall be blue.

503.2.2.1 Restrained Joint Water Main Pipe

Polyvinyl chloride restrained joint water main pipe up to and including 12-inch pipe shall meet the requirements of AWWA C900. Polyvinyl chloride restrained joint water main pipe for 16-inch pipe shall meet the requirements of AWWA C905. The color of the outside of the polyvinyl chloride pipe shall be blue. Pipe shall have the same outside diameter as ductile iron pipe. Pipe shall be pressure Class 235 (DR 18), unless otherwise noted. The restrained joint shall be capable of providing full restraint for the thrust generated at the rated working pressure of the pipe. The joint shall be sealed using an elastomeric gasket meeting the requirements of ASTM D 3139. The contractor may use Type 1 or Type 2 polyvinyl chloride restrained joint water main pipe.

Type 1 polyvinyl chloride restrained joint water main pipe shall have bell and spigot type joints with the bell being integrally formed with the pipe and having a sealing gasket, a restraining groove, and a nylon restraining spline. Polyvinyl chloride restrained joint water main pipe shall be CertainTeed Certa-Lok C900 RJIB or equal.

Type 2 polyvinyl chloride restrained joint water main pipe shall be plain end pipe with a restraining groove on each end and shall have couplings with beveled edges, two sealing gaskets, two restraining grooves, and nylon restraining splines for each groove. Polyvinyl chloride restrained joint water main pipe shall be CertainTeed Certa-Lok C900 RJ, CertainTeed Certa-Lok C905 RJ, or equal.

503.2.2.2 Fusible Joint Water Main Pipe

Fusible joint water main pipe shall consist of plain end pipe. The fusible joint shall be capable of providing full restraint for the thrust generated at the rated working pressure of the pipe. Fusible joint water main pipe shall be fusible AWWA C900 polyvinyl chloride pipe as manufactured for Underground Solution, Inc.

503.3 Construction Method
503.3.1 Guidance System

The Contractor shall use a manufactured guidance system that provides a continuous and accurate determination of the location of the drill head during the drilling operation. The guidance system shall be capable of tracking the drill head at all depths up to 50 feet and in any soil condition. The guidance system shall provide immediate information on the tool face, azimuth, and inclination. The guidance system shall be calibrated to the manufacturer's specifications. The guidance system shall be accurate at sensing the drill heads position within plus or minus one (1) foot horizontally and plus or minus 0.25 feet vertically. The contractor shall not proceed with directional drilling unless the guidance system is operating correctly.

503.3.2 Site Survey

The entire directional drill route shall be accurately surveyed. The entry and exit locations shall be marked as shown on the directional drill plan prepared by the Contractor. The Contractor shall field verify the location and elevation of all existing utilities that will be crossed during the directional drilling operation. The directional drill route shall be surveyed for any surface geo-magnetic variation or abnormalities if the Contractor is using a magnetic guidance system.

503.3.3 Trenchless Installation

A pilot hole shall be drilled at the alignment and grade shown on the drawings. Readings shall be taken with the guidance system after each successive drill pipe, but not more than 10 feet. At no time shall the deflection radius of the drill pipe exceed the maximum specified deflection of the pressure pipe to be installed. Upon approval of the pilot hole location, the pilot hole shall be reamed larger. The pilot hole shall be reamed to the diameter recommended by the pipe manufacturer or a maximum of 1.5 times larger than the largest outside diameter of pipe, whichever is smaller. The Contractor shall select the drilling fluid based on the existing soils. The drilling fluid shall be acceptable to the pipe manufacturer.

Pipe joints shall be assembled in strict accordance with the manufacturer's written instructions. Tracer wire shall be attached to the pulling eye and the top of the pressure pipe. The tracer wire shall be secured to the pressure pipe every 5 feet using a minimum of two wraps of tape around the pressure pipe. The pipe shall be pulled though the drilled hole using constant tension throughout the operation. The pulling device shall have a direct reading gauge to indicate the pulling tension. The actual tension shall never exceed the safe pulling tension of the pipe.

503.4 Documentation

The Contractor shall record the ground elevation at the point of measurement and the alignment and depth of the pipeline every 20 feet and at all changes in direction and changes in grade. All depth measurements shall be referenced to the centerline of the pulling head. The alignment and depth information shall be documented on a set of record drawings. Depth measurements shall be converted to elevations using the project vertical datum.

503.5 Testing

All pipelines shall have a hydrostatic pressure test composed of a pressure test and a leakage test after the pipe is installed. The pipe may be tested separately or with the associated pipeline segment.

503.6 Measurement and Payment

Horizontal directional drilling of water main pipe completed in accordance with this contract shall be paid by the lump sum for the size and type specified in the proposal schedule. Horizontal directional drilling of water main pipe shall include all plant, labor, material, and equipment as necessary for providing access pits and drilling fluid; for furnishing, installing, and testing pipe; for backfilling access pits, grading, and cleaning up; and for all incidentals necessary to complete the work, as shown and specified.

The City will pay for measured quantities at the contract unit price under the following bid items:

ITEM #	DESCRIPTION	UNIT
503.01	8” PVC Water Main Installed by Directional Drilling	EACH
503.02	12” PVC Water Main Installed by Directional Drilling	EACH
503.03	16” PVC Water Main Installed by Directional Drilling	EACH

Page Intentionally Left Blank

SECTION 504

WATER MAIN PIPE AND FITTINGS

504.1 General

This section describes construction of water main pipe installed by trenching. Water main pipe and fittings includes all labor, material, and equipment necessary to furnish and install all bedding, backfill, and blocking; and to furnish, install, and test 4-inch to 24-inch ductile iron pressure pipe, 4-inch to 16-inch polyvinyl chloride pressure pipe, and ductile iron fittings as shown and specified.

504.2 Materials

504.2.1 Submittals

The Contractor shall submit manufacturer's data for the pipe, fittings, gaskets, and appurtenances.

504.2.2 Water Main Pipe

504.2.2.1 Polyvinyl Chloride Water Main Pipe

Polyvinyl chloride (PVC) water main pipe up to and including 12-inch pipe shall meet the requirements of AWWA C900 for bell end pipe with elastomeric-gasket joints. Polyvinyl chloride water main pipe for 16-inch pipe shall meet the requirements of AWWA C900 for bell end pipe with elastomeric-gasket joints. The color of the outside of the polyvinyl chloride pipe shall be blue. Pipe shall have the same outside diameter as ductile iron pipe. Pipe shall be pressure Class 235 (DR 18), unless otherwise noted. Polyvinyl chloride pressure pipe shall have bell and spigot type push-on joints with the bell being integrally formed with the pipe, unless otherwise noted. The joint shall be sealed using an elastomeric gasket meeting the requirements of ASTM D 3139.

504.2.2.2 Polyvinyl Chloride Restrained Joint Water Main Pipe

Polyvinyl chloride restrained joint water main pipe up to and including 12-inch pipe shall meet the requirements of AWWA C900. Polyvinyl chloride restrained joint water main pipe for 16-inch pipe shall meet the requirements of AWWA C900. The color of the outside of the polyvinyl chloride pipe shall be blue. Pipe shall have the same outside diameter as ductile iron pipe. Pipe shall be pressure Class 235 (DR 18), unless otherwise noted. The restrained joint shall be capable of providing full restraint for the thrust generated at the rated working pressure of the pipe. The joint shall be sealed using an elastomeric gasket meeting the requirements of ASTM D 3139. The contractor may use Type 1, Type 2, or Type 3 polyvinyl chloride restrained joint water main pipe.

Type 1 polyvinyl chloride restrained joint water main pipe shall have bell and spigot type joints with the bell being integrally formed with the pipe and having a sealing gasket, a restraining groove, and a nylon restraining spline. Polyvinyl chloride restrained joint water main pipe shall be CertainTeed Certa-Lok C900 RJIB or equal.

Type 2 polyvinyl chloride restrained joint water main pipe shall be plain end pipe with a restraining groove on each end and shall have couplings with beveled edges, two sealing gaskets, two restraining grooves, and nylon restraining splines for each groove. Polyvinyl chloride restrained joint water main pipe shall be CertainTeed Certa-Lok C900 RJ, CertainTeed Certa-Lok C905 RJ, or equal.

Type 3 polyvinyl chloride restrained joint water main pipe shall have bell and spigot type joints with the bell being integrally formed with the pipe and having metallic restraining rings and metallic restraint casing factory installed in the bell. Type 1 polyvinyl chloride restrained joint water main pipe shall be Eagle Loc 900™, Diamond Lok-21®, or equal.

504.2.2.3 Ductile Iron Water Main Pipe

Ductile iron water main pipe shall meet the requirements of AWWA C151 (ANSI A21.51). Pipe shall be thickness Class 52, unless otherwise noted. Ductile iron pipe shall have bell and spigot type push-on joints with the bell being integrally formed with the pipe, unless otherwise noted. Push-on joints for ductile iron pipe shall conform to the requirements of AWWA C111 (ANSI A21.11).

Pipe shall be cement-mortar lined in accordance with AWWA C104 (ANSI A21.4). Cement-mortar lining shall be standard thickness, unless otherwise specified. The exterior of the pipe shall have an asphaltic coating, unless otherwise noted. Pipe shall have shop applied terminal strips for attachments of a jumper conductor to provide electrical continuity.

504.2.2.4 Ductile Iron Restrained Joint Water Main Pipe

Ductile iron restrained joint pipe shall meet the applicable requirements of AWWA C111 (ANSI A21.11). The joint shall provide for a minimum deflection of not less than three degrees. The joint shall be capable of providing full restraint for the thrust generated at the rated working pressure of the pipe. Restrained joint ductile iron pipe shall be Griffin Snap-Lok or Bolt-Lok; Clow Super-Lok Joint; American Flex-Ring, Lok-Ring, or Lok-Fast Joint; U.S. Pipe TR FLEX; or equal.

504.2.2.5 Pipe Materials in Contaminated Soil or Water

If contaminated soil or water is encountered and identified per Section 202 of the Standard Specification, the Contractor to use ductile iron water main pipe materials in accordance with 504.2.2.3 and 504.2.2.4, as directed by the Engineer.

504.2.3 Fittings
504.2.3.1 Ductile Iron Fittings

Fittings shall conform to the requirements of AWWA C153 (ANSI A21.53). Fittings shall be Pressure Class 350 ductile iron. Fittings shall have mechanical joints that conform to the requirements of AWWA C111 (ANSI A21.11). Fittings shall be cement-mortar lined in

accordance with AWWA C104 (ANSI A21.4). Cement-mortar lining shall be standard thickness, unless otherwise noted. The exterior of the fitting shall have an asphaltic coating, unless otherwise noted.

504.2.3.2 Five Degree PVC Bends

Five degree PVC bends shall be fabricated from pipe that meets all requirements of AWWA C900. Bends shall fully comply with all applicable requirements of AWWA C900 for fabricated fittings including fully thickened bells in accordance with ASTM D3139. Bends shall be bell by spigot, DR 18, and rated for a minimum 235 psi. Bends shall be manufactured by Multi Fittings Corporation or equal.

504.2.4 Gaskets

All gaskets shall be plain rubber made of styrene butadiene copolymer. Gaskets shall meet the requirements of ASTM F477.

If contaminated soil or water is encountered and identified per Section 202 of the Standard Specification, the Contractor shall use fluorocarbon gaskets in lieu of plain rubber (styrene butadiene copolymer) gaskets, as directed by the Engineer. The gaskets will be used with ductile iron pipe joints. In addition, clean clay dams shall be installed across the width of the trench, the depth of the contamination, at each end of the trench that is determined to contain contamination, as directed by the Engineer.

504.3 Construction
504.3.1 General

The Contractor shall comply with all AWWA C600 requirements for installation of ductile-iron pipe and their appurtenances. The Contractor shall comply with all AWWA C605 requirements of installation of polyvinyl chloride pipe and their appurtenances. The Contractor shall comply with all applicable AWWA and manufacturer recommendations and specifications for proper installation of materials.

504.3.2 Assembling Joints
504.3.2.1 Push-On Joints
504.3.2.1.1 Ductile Iron Pipe

Thoroughly clean the groove and bell socket and insert the gasket, making sure that it faces the proper direction and that it is correctly seated. After cleaning dirt or foreign material from the plain end, apply lubricant in accordance with the pipe manufacturer's recommendations. The lubricant is supplied in clean cans and every effort should be made to keep it clean. Be sure that the plain end of the pipe is beveled. Any square or sharp edges may damage or dislodge the gasket and cause a leak. Push the plain end into the bell of the pipe. Keep the joint straight while pushing. Gaskets to be installed in cold weather shall be warmed first. Make deflection after the joint is assembled. Pipe that is not furnished with a depth mark shall be marked before assembly to assure that the spigot end is inserted to the full depth of the joint. Whenever it is desirable to deflect a push-on ductile iron pipe joint, the amount of deflection shall not exceed the maximum limits shown in the following table.

Maximum Joint Deflection For Full Length Push-On Joint Ductile Iron Pipe

Nominal Pipe Size - Inches	Deflection Angle Degrees	Maximum Offset Inches 18 ft. L	20 ft. L	Radius by L	
4	5	19	21	205	230
6	5	19	21	205	230
8	5	19	21	205	230
10	5	19	21	205	230
12	5	19	21	205	230
16	3*	11	12	340	380
20	3*	11	12	340	380
24	3*	11	12	340	380

∗ The maximum deflection angle may be larger than shown for 16-inch and larger push-on joint pipe. Consult manufacturer for maximum deflection angle.

504.3.2.1.2 Polyvinyl Chloride Pipe

The sealing surface of the pipe spigot end, the pipe bell, the coupling or fitting, and the elastomeric gaskets shall be cleaned immediately before assembly. Factory-installed gaskets should not be removed for cleaning. The joint shall be free of dirt, sand, grit, grease, or any foreign material. An approved lubricant shall be applied in accordance with the recommendation of the pipe manufacturer. Damage to the gaskets may result from the use of improper lubricants. If joints are to be assembled in cold-weather conditions, factory-installed gaskets may be removed if permitted by the pipe manufacturer and taken to a heated vehicle or shelter to restore the gasket's flexibility prior to joint assembly.

Pipe spigot ends are premarked with a circumferential insertion line. This line references how far the spigot shall be inserted into the adjoining polyvinyl chloride pipe bell. Field-cut spigots ends shall be marked to match the manufacturer's insertion line and beveled to match the factory-supplied bevel. Pipe to pipe joints shall be assembled only to the insertion line. After assembly, the insertion line shall remain visible and be nearly flush with the lip of the adjoining polyvinyl chloride pipe bell. Joints assembled beyond the insertion line shall be considered over assembled and shall be reassembled. The bell shall be in straight alignment with the pipe spigot end before and during joint assembly.

Polyvinyl chloride pipe may accommodate longitudinal bending with the following limitations. The Contractor shall block or brace pipe joints to ensure that bending of the polyvinyl chloride pipe does not result in axial deflection in the push-on joints that exceed the manufacturer's limits. The longitudinal bending in the polyvinyl chloride pipe barrel shall not result in a bending radius less than the minimum limits established in the following table

Maximum Bending Radius For Full Length Push-On Joint Polyvinyl Chloride Pipe

Nominal Pipe Size - Inches	Maximum Offset Inches (20 ft. L)	Minimum Bending Radius of Curve (ft.) (20 ft. L)
4	24	100
6	17	144
8	12	189
10	*	*

* The bending of polyvinyl chloride pipe barrels 10 inches in diameter and larger is not recommended due to the required forces.

The curved alignment of pipelines larger than 10 inches in diameter shall be determined by the pipe manufacturer's published joint offset limits.

504.3.2.2 Mechanical Joints

When pipe is cut in the field, the cut shall provide a smooth end at a right angle to the longitudinal axis of the pipe. The pipe spigot end shall be deburred, slightly beveled, and remarked with the appropriate insertion line. Note that ductile iron fitting bells have a shorter insertion length than polyvinyl chloride pipe bells. The factory bevel on a polyvinyl chloride pipe shall be removed to form a deburred, square-cut end with only a slight outer bevel to ensure the proper engagement of a mechanical joint sealing gasket.

Wipe the socket and the plain end clean. Wash the plain end, socket, and gasket with a soap solution to improve gasket seating. Place the gland on the plain end with the lip extension toward the plain end, followed by the gasket with the narrow edge of the gasket toward the plain end. Insert the pipe into the socket and press the gasket firmly and evenly into the gasket recess. Keep the joint straight during assembly. Make deflection after joint assembly but before tightening bolts. Push the gland toward the socket and center it around the pipe with the gland lip against the gasket. Insert bolts and hand tighten nuts.

Tighten the bolts to the normal range of bolt torque while at all times maintaining approximately the same distance between the gland and the face of the flange at all points around the socket. This shall be accomplished by partially tightening the bottom bolt first, then the top bolt, next the bolts at either side, finally the remaining bolts. Repeat the process until all bolts are within the appropriate range of torque. All nuts shall be tightened with a suitable (preferably torque-limiting) wrench. The torque for various sizes of bolts shall be tested as required by the Engineer and shall be as follows:

SIZE (in.)	RANGE OF TORQUE (ft-lb)
5/8	40-60
¾	60-90
1	70-100
1¼	90-120

Whenever it is desirable to deflect mechanical-joints, the amount of deflection shall not exceed the maximum limits shown in the following table.

Maximum Joint Deflection For Mechanical Joints

Nominal Pipe Size - Inches	4	6	8	10	12	16	20	24
Deflection Angle Degrees	8.30	7.12	5.35	5.35	5.35	3.58	3.00	2.38

504.3.2.3 Restrained Joints

Restrained joint pipe shall be assembled in strict accordance with the manufacturer's written instructions. Pipe joints shall not be assembled underwater.

504.3.3 Electrical Continuity

An electrical bonding system shall be provided for ductile iron pipe to achieve electrical continuity. The electrical bonding system shall consist of a copper jumper conductor connected across the joints on all ductile iron pipe and fittings.

504.3.4 Field Closure

Field closures shall be made by cutting the pipe in a neat workmanlike manner perpendicular to the axis of the pipe without damage to the pipe or lining so as to leave a smooth end. All cuts shall be made with an acceptable mechanical cutter. When the field cut pipe is to be used with rubber gasket joints, it shall be tapered by grinding or filing about 1/8-inch back at an angle of about 30 degrees and all sharp edges shall be removed. Plain end pipe shall be joined with a solid sleeve unless otherwise noted.

504.3.5 Bedding

All pipelines shall have Green Bay Water Utility pipeline bedding unless otherwise noted.

504.3.6 Contaminated Soil or Water

Dewatering of water mains shall be performed in a manner to minimize the volume of water encountering contaminated soil/water and requiring additional handling of contaminated groundwater per Section 202 of the Standard Specification.

504.4 Testing

All pipelines and appurtenances shall have a hydrostatic test composed of a pressure test and a leakage test.

504.5 Measurement and Payment

504.5.1 Fittings

Fittings shall be measured separately as a unit and paid per unit installed of the various sizes and types completed and accepted in accordance with this contract.

The quantity of fittings, measured as specified herein, will be paid at the contract unit price for each of various sizes and types of fittings. This price shall be payment in full for furnishing and installing all insulation, thrust restraint systems, fittings, tracer wire, bedding, backfill, and blocking; for excavation, sheeting, and shoring; for forming foundation, making connections, anchoring fittings and testing fittings; for backfilling, grading, and cleaning up; and for all labor, tools, equipment, and incidentals necessary to complete and test the work in accordance with the contract.

504.5.2 Water Main Gaskets

The bid item Fluorocarbon Gaskets-Size shall be the increase in cost of furnishing and installing the fluorocarbon gasket in lieu of plain rubber, as well as the cost to furnish and install two clay dams at the two end limits of the contamination.

504.5.3 Water Main Pipelines

Water main pipelines shall be measured by the lineal foot in place, and the quantity measured for payment shall be the number of lineal feet of each of the various sizes and types completed and accepted in accordance with the contract, measured along the horizontal centerline of the water main pipeline including fittings and valves.

The quantity of water main pipeline, measured as specified herein, will be paid at the contract unit price per lineal foot of the various sizes and types of pipeline. This price shall be payment in full for furnishing and installing all insulation, joint restraint systems, pipe, tracer wire, bedding, backfill, and blocking; for excavation, sheeting, and shoring; for forming foundation, joining pipe, making connections, anchoring pipe, and testing pipe; for backfilling, grading, and cleaning up: and for all labor, tools, equipment, and incidentals necessary to complete and test the work in accordance with the contract.

The City will pay for measured quantities at the contract unit price under the following bid items unless otherwise listed in the proposal schedule.

ITEM #	DESCRIPTION	UNIT
504.01	4” PVC Water Main w/Natural Backfill	LF
504.02	4” PVC Water Main w/Gravel Backfill	LF
504.03	4” PVC Restrained Joint Water Main w/Natural Backfill	LF
504.04	4” PVC Restrained Joint Water Main w/Gravel Backfill	LF
504.05	6” PVC Water Main w/Natural Backfill	LF
504.06	6” PVC Water Main w/Gravel Backfill	LF

504.07	6” PVC Restrained Joint Water Main w/Natural Backfill	LF
504.08	6” PVC Restrained Joint Water Main w/Gravel Backfill	LF
504.09	8” PVC Water Main w/Natural Backfill	LF
504.10	8” PVC Water Main w/Gravel Backfill	LF
504.11	8” PVC Restrained Joint Water Main w/Natural Backfill	LF
504.12	8” PVC Restrained Joint Water Main w/Gravel Backfill	LF
504.13	10” PVC Water Main w/Natural Backfill	LF
504.14	10” PVC Water Main w/Gravel Backfill	LF
504.15	10” PVC Restrained Joint Water Main w/Natural Backfill	LF
504.16	10” PVC Restrained Joint Water Main w/Gravel Backfill	LF
504.17	12” PVC Water Main w/Natural Backfill	LF
504.18	12” PVC Water Main w/Gravel Backfill	LF
504.19	12” PVC Restrained Joint Water Main w/Natural Backfill	LF
504.20	12” PVC Restrained Joint Water Main w/Gravel Backfill	LF
504.21	16” PVC Water Main w/Natural Backfill	LF
504.22	16” PVC Water Main w/Gravel Backfill	LF
504.23	16” PVC Restrained Joint Water Main w/Natural Backfill	LF
504.24	16” PVC Restrained Joint Water Main w/Gravel Backfill	LF
504.25	4” DI Water Main w/Gravel Backfill	LF
504.26	4” DI Water Main w/Natural Backfill	LF
504.27	4” DI Restrained Joint Water Main w/Gravel Backfill	LF
504.28	4” DI Restrained Joint Water Main w/Natural Backfill	LF
504.29	6” DI Water Main w/Gravel Backfill	LF
504.30	6” DI Water Main w/Natural Backfill	LF
504.31	6” DI Restrained Joint Water Main w/Gravel Backfill	LF
504.32	6” DI Restrained Joint Water Main w/Natural Backfill	LF
504.33	8” DI Water Main w/Gravel Backfill	LF
504.34	8” DI Water Main w/Natural Backfill	LF
504.35	8” DI Restrained Joint Water Main w/Gravel Backfill	LF
504.36	8” DI Restrained Joint Water Main w/Natural Backfill	LF
504.37	10” DI Water Main w/Gravel Backfill	LF
504.38	10” DI Water Main w/Natural Backfill	LF
504.39	10” DI Restrained Joint Water Main w/Gravel Backfill	LF
504.40	10” DI Restrained Joint Water Main w/Natural Backfill	LF
504.41	12” DI Water Main w/Gravel Backfill	LF
504.42	12” DI Water Main w/Natural Backfill	LF
504.43	12” DI Restrained Joint Water Main w/Gravel Backfill	LF
504.44	12” DI Restrained Joint Water Main w/Natural Backfill	LF
504.45	16” DI Water Main w/Gravel Backfill	LF
504.46	16” DI Water Main w/Natural Backfill	LF
504.47	16” DI Restrained Joint Water Main w/Gravel Backfill	LF
504.48	16” DI Restrained Joint Water Main w/Natural Backfill	LF
504.49	20” DI w/Natural Backfill	LF
504.50	20” DI w/Gravel Backfill	LF
504.51	20” DI Restrained Joint Water Main w/Natural Backfill	LF
504.52	20” DI Restrained Joint Water Main w/Gravel Backfill	LF

504.53	24” DI w/Natural Backfill	LF
504.54	24” DI w/Gravel Backfill	LF
504.55	24” DI Restrained Joint Water Main w/Natural Backfill	LF
504.56	24” DI Restrained Joint Water Main w/Gravel Backfill	LF
504.57	4” 90º Bend	EACH
504.58	4” 45º Bend	EACH
504.59	4” 22º Bend	EACH
504.60	4” 11º Bend	EACH
504.61	4” x 4” Tee	EACH
504.62	4” x 4” Cross	EACH
504.63	4” x 3” Reducer	EACH
504.64	4” Solid Sleeve	EACH
504.65	4” Dual Sleeve	EACH
504.66	4” Plug	EACH
504.67	4” Cap	EACH
504.68	6” 90º Bend	EACH
504.69	6” 45º Bend	EACH
504.70	6” 22º Bend	EACH
504.71	6” 11º Bend	EACH
504.72	6” 5º Bend	EACH
504.73	6” x 6” Tee	EACH
504.74	6” x 4” Tee	EACH
504.75	6” x 6” Anchoring tee	EACH
504.76	6” x 6” Cross	EACH
504.77	6” x 4” Cross	EACH
504.78	6” x 4” Reducer	EACH
504.79	6” Solid Sleeve	EACH
504.80	6” Dual Sleeve	EACH
504.81	6” Plug	EACH
504.82	6” Cap	EACH
504.83	8” 90º Bend	EACH
504.84	8” 45º Bend	EACH
504.85	8” 22º Bend	EACH
504.86	8” 11º Bend	EACH
504.87	8” 5º Bend	EACH
504.88	8” x 8” Tee	EACH
504.89	8” x 6” Tee	EACH
504.90	8” x 4” Tee	EACH
504.91	8” x 6” Anchoring tee	EACH
504.92	8” x 8” Cross	EACH
504.93	8” x 6” Cross	EACH
504.94	8” x 4” Cross	EACH
504.95	8” x 6” Reducer	EACH
504.96	8” x 4” Reducer	EACH
504.97	8” Solid Sleeve	EACH
504.98	8” Dual Sleeve	EACH

504.99	8” Plug	EACH
504.100	8” Cap	EACH
504.101	10” 90º Bend	EACH
504.102	10” 45º Bend	EACH
504.103	10” 22º Bend	EACH
504.104	10” 11º Bend	EACH
504.105	10” 5º Bend	EACH
504.106	10” x 10” Tee	EACH
504.107	10” x 8” Tee	EACH
504.108	10” x 6” Tee	EACH
504.109	10” x 4” Tee	EACH
504.110	10” x 6” Anchoring tee	EACH
504.111	10” x 10” Cross	EACH
504.112	10” x 8” Cross	EACH
504.113	10” x 6” Cross	EACH
504.114	10” x 4” Cross	EACH
504.115	10” x 8” Reducer	EACH
504.116	10” x 6” Reducer	EACH
504.117	10” x 4” Reducer	EACH
504.118	10” Solid Sleeve	EACH
504.119	10” Dual Sleeve	EACH
504.120	10” Plug	EACH
504.121	10” Cap	EACH
504.122	12” 90º Bend	EACH
504.123	12” 45º Bend	EACH
504.124	12” 22º Bend	EACH
504.125	12” 11º Bend	EACH
504.126	12” 5º Bend	EACH
504.127	12” x 12” Tee	EACH
504.128	12” x 10” Tee	EACH
504.129	12” x 8” Tee	EACH
504.130	12” x 6” Tee	EACH
504.131	12” x 4” Tee	EACH
504.132	12” x 6” Anchoring tee	EACH
504.133	12” x 12” Cross	EACH
504.134	12” x 10” Cross	EACH
504.135	12” x 8” Cross	EACH
504.136	12” x 6” Cross	EACH
504.137	12” x 4” Cross	EACH
504.138	12” x 10” Reducer	EACH
504.139	12” x 8” Reducer	EACH
504.140	12” x 6” Reducer	EACH
504.141	12” x 4” Reducer	EACH
504.142	12” Solid Sleeve	EACH
504.143	12” Dual Sleeve	EACH
504.144	12” Plug	EACH

504.145	12” Cap	EACH
504.146	16” 90º Bend	EACH
504.147	16” 45º Bend	EACH
504.148	16” 22º Bend	EACH
504.149	16” 11º Bend	EACH
504.150	16” x 16” Tee	EACH
504.151	16” x 12” Tee	EACH
504.152	16” x 10” Tee	EACH
504.153	16” x 8” Tee	EACH
504.154	16” x 6” Tee	EACH
504.155	16” x 6” Anchoring tee	EACH
504.156	16” x 16” Cross	EACH
504.157	16” x 12” Cross	EACH
504.158	16” x 10” Cross	EACH
504.159	16” x 8” Cross	EACH
504.160	16” x 6” Cross	EACH
504.161	16” x 12” Reducer	EACH
504.162	16” x 10” Reducer	EACH
504.163	16” x 8” Reducer	EACH
504.164	16” Solid Sleeve	EACH
504.165	16” Dual Sleeve	EACH
504.166	16” Plug	EACH
504.167	16” Cap	EACH
504.168	20” 90º Bend	EACH
504.169	20” 45º Bend	EACH
504.170	20” 22º Bend	EACH
504.171	20” 11º Bend	EACH
504.172	20” x 20” Tee	EACH
504.173	20” x 16” Tee	EACH
504.174	20” x 12” Tee	EACH
504.175	20” x 10” Tee	EACH
504.176	20” x 8” Tee	EACH
504.177	20” x 6” Tee	EACH
504.178	20” x 6” Anchoring tee	EACH
504.179	20” x 20” Cross	EACH
504.180	20” x 16” Cross	EACH
504.181	20” x 12” Cross	EACH
504.182	20” x 10” Cross	EACH
504.183	20” x 8” Cross	EACH
504.184	20” x 6” Cross	EACH
504.185	20” x 16” Reducer	EACH
504.186	20” x 12” Reducer	EACH
504.187	20” x 10” Reducer	EACH
504.188	20” Solid Sleeve	EACH
504.189	20” Dual Sleeve	EACH
504.190	20” Plug	EACH

504.191	20” Cap	EACH
504.192	24” 90º Bend	EACH
504.193	24” 45º Bend	EACH
504.194	24” 22º Bend	EACH
504.195	24” 11º Bend	EACH
504.196	24” x 24” Tee	EACH
504.197	24” x 16” Tee	EACH
504.198	24” x 12” Tee	EACH
504.199	24” x 10” Tee	EACH
504.200	24” x 8” Tee	EACH
504.201	24” x 6” Tee	EACH
504.202	24” x 6” Anchoring tee	EACH
504.203	24” x 16” Cross	EACH
504.204	24” x 12” Cross	EACH
504.205	24” x 10” Cross	EACH
504.206	24” x 8” Cross	EACH
504.207	24” x 6” Cross	EACH
504.208	24” x 16” Reducer	EACH
504.209	24” x 12” Reducer	EACH
504.210	24” Solid Sleeve	EACH
504.211	24” Dual Sleeve	EACH
504.212	24” Plug	EACH
504.213	24” Cap	EACH
504.214	Fluorocarbon Gasket – 4”	EACH
504.215	Fluorocarbon Gasket – 6”	EACH
504.216	Fluorocarbon Gasket – 8”	EACH
504.217	Fluorocarbon Gasket – 10”	EACH
504.218	Fluorocarbon Gasket – 12”	EACH
504.219	Fluorocarbon Gasket – 16”	EACH
504.220	Fluorocarbon Gasket – 20”	EACH
504.221	Fluorocarbon Gasket – 24”	EACH

SECTION 505

WATER MAIN VALVES AND BOXES

505.1 General

This section describes installation of water main valves and boxes. Water main valves and boxes include all labor, materials, and equipment necessary to furnish and install all bedding, backfill, blocking, valve boxes; and to furnish, install, and test under actual operating conditions 4-inch to 24-inch water main valves as shown on plans or required by the Engineer.

505.2 Materials

505.2.1 Submittals

The Contractor shall submit manufacturer's data for valves, valve box mounting adapter, and valve boxes.

505.2.2 General Valve Requirements

Valves shall have mechanical joint ends and a 2-inch operating nut. The direction to turn the operating nut to open the valve shall be as shown on the drawings.

505.2.3 Resilient-Seated Gate Valves

Valves shall be designed for a 200 psig working pressure. Resilient-seated gate valves shall be full opening, non-rising stem, compression seated wedge type valves conforming to the requirements of AWWA C509 or AWWA C515. Valves shall have an epoxy coated cast iron or ductile iron body, bronze stem, and a double sealing permanently bonded fully encased gate. The thrust bearing recess and stem opening in the bonnet shall be bronze bushed. The waterway shall be smooth and shall have no depressions or cavities in seat area where foreign material can lodge and prevent closure or sealing. Valve stem shall have O-ring seals. The O-ring stem seal shall be so designed that the seal above the stem collar can be replaced with the valve under pressure in the full open position. Bolts, nuts, washers, and other attachment hardware for the bonnet, stuffing box, and operating nut shall be AISI Type 316 stainless steel. Valves shall have manufacturer’s name, pressure rating, and year manufactured casted on body. Resilient-seated gate valves shall be manufactured by American AVK, American Flow Control, Clow Valve Co., Kennedy Valve Co., M&H Valve Co, Mueller Co., or U.S. Pipe.

505.2.4 Butterfly Valves

Valves shall be designed for a 150 psig working pressure. Butterfly valves shall meet or exceed the requirements of AWWA C504 for Class 150B valves. Valve body shall be ASTM A 126 Class B cast iron. Valve disc shall be ASTM A 48 Class 40 or ASTM A 536 ductile iron with ASTM A 276 AISI Type 304 or 316 stainless steel shafts. Shaft sleeves shall be O-ring seals or V-type packing. Flanged valves shall have short body laying lengths with 125 pound flange ends. The valve operator shall be a totally enclosed worm gear or traveling nut, as required, for a

maximum pull of 80 pounds. Bolts, nuts, washers, and other attachment hardware for the thrust plate, shaft cap, and the actuator assembly shall be AISI Type 316 stainless steel. Butterfly valves and boxes shall be M & H/Clow Valve Company Style 4500 and 1450, Pratt "Groundhog", or equal.

505.2.5 Valve Boxes

Valve boxes shall be manufactured in the U.S.A. Valve boxes shall be a cast iron with a 5¼-inch diameter screw-type shaft. Valve box shall provide a minimum of 18 inches of vertical adjustment unless otherwise noted. Cover shall be marked "Water".

Valve boxes for gate valves shall be a three piece box with a number 6 base. Valve boxes for gate valves shall be Tyler/Union Series 6860 or East Jordan Series 8560. Valve boxes for butterfly valves shall be a two piece box. Valve boxes for butterfly valves shall be Tyler/Union Series 6850 or East Jordan Series 8550.

505.2.6 Valve Box Mounting Adapter

Valve box mounting adapter shall be made from a rubber compound. The valve box mounting adapter for gate valve boxes shall be Valve Box Adaptor II #6 Base as manufactured by Adaptor Inc. or equal. The valve box mounting adapter for butterfly valve boxes shall be Valve Box Adaptor II Multi-Fit as manufactured by Adaptor Inc. or equal.

505.3 Construction Methods
505.3.1 General

The Contractor shall comply with all applicable AWWA and manufacturer recommendations and specifications for proper installation of materials.

505.3.2 Buried Valves

The valve shall be opened and closed at least one time prior to installation in the presence of the water utility inspector. If the valve is found to be defective, the Contractor shall immediately notify the Engineer and request a different valve.

The valve shall be set on a 4x8x16 inch solid concrete block with the long side of the block set perpendicular to the water main. Pipe bedding material shall be tamped in place from a point above the main to a point 6 inches above the bottom of the valve box base to prevent the valve box or base from shifting.

A valve box shall be set over all valves unless vaults or special chambers are specified. The valve box shall be set on a valve box mounting adapter. The mounting adapter shall be set and leveled. Valve boxes and covers shall be centered over the valve operating nut and the entire box assembly secured in place before backfilling operations. The contractor shall furnish and install valve box extensions, if necessary, to adjust the top of the box to final grade. The area around the valve box shall be backfilled with sand or gravel. Valve boxes that become shifted or filled during backfilling shall be entirely uncovered and reset.

505.3.3 Butterfly Valves

The contractor shall verify that the wall thickness of a polyvinyl chloride pipe does not interfere with the operation of the valve disc during opening the valve by beveling the inside of the end of the polyvinyl chloride pipe. The valve shall be opened and closed immediately after assembling the joint.

505.4 Testing

The valve shall be opened and closed not less than two times after installation in the presence of the water utility inspector. The number of turns to open and close the valve shall be recorded each time. After testing for proper operation, the valve shall be closed and pressure tested at 125 p.s.i. in both directions.

505.5 Measurement and Payment

Water main valves and boxes completed in accordance with this contract shall be measured separately as a unit. The valve and valve box shall be paid per unit installed. Price shall be payment in full for furnishing all materials, for all excavation, sheeting, and shoring; for furnishing and installing bedding, backfill, blocking, valve, valve box, and valve box mounting adapter; for cleanup; and for all labor, tools, equipment, and incidentals necessary to complete the work in accordance with the contract.

The City will pay for measured quantities at the contract unit price under the following bid items:

ITEM #	DESCRIPTION	UNIT
505.01	4” Gate Valve (_OR, _OL)	EACH
505.02	6” Gate Valve (_OR, _OL)	EACH
505.03	8” Gate Valve (_OR, _OL)	EACH
505.04	10” Gate Valve (_OR, _OL)	EACH
505.05	12” Gate Valve (_OR, _OL)	EACH
505.06	16” Butterfly Valve (_OR, _OL)	EACH
505.07	20” Butterfly Valve (_OR, _OL)	EACH
505.08	24” Butterfly Valve (_OR, _OL)	EACH

Page Intentionally Left Blank

SECTION 506

TAPPING SLEEVES AND VALVES

506.1 General

This section describes installation of tapping sleeve and valves on existing water main. Tapping sleeves and valves includes all labor, materials, and equipment necessary to furnish and install backfill, bedding, blocking, tapping sleeves, tapping valves, and valve boxes; and to test tapping sleeves and valves under actual operating conditions as shown on plans or as required by the Engineer.

506.2 Materials

506.2.1 Submittals

The Contractor shall submit manufacturer's data for tapping sleeves, tapping valves, valve box mounting adapter, and valve boxes.

506.2.2 Tapping Sleeves

Tapping sleeves shall have an AISI Type 304 stainless steel or epoxy coated ASTM A36 carbon steel mechanical joint outlet. Tapping sleeves outside diameter range shall accommodate C.I.O.D. pipe. Tapping sleeve shall be rated for 150 psi working pressure. The shell and lugs shall be AISI Type 304 stainless steel. Bolts and nuts shall be 5/8-inch diameter AISI Type 304 stainless steel with plastic washers. Nuts shall be coated to prevent galling. Test plug shall be brass or AISI Type 304 stainless steel. Gaskets shall conform to ASTM D2000 AA41S Rubber for Water Service. Tapping sleeves shall be PowerSeal Model 3480MJ AS/CS, PowerSeal Model 3490MJ AS/CS, Ford Model FAST, Ford Model FTSS, or equal.

506.2.3 Tapping Valves

Tapping valves shall be resilient-seated gate valves with mechanical joint ends and a 2-inch operating nut. The direction to turn the operating nut to open the valve shall be as shown on the drawings. Valves shall be designed for a 200 psig working pressure. Valves shall be full opening, non-rising stem, compression seated wedge type valves conforming to the requirements of AWWA C509 or AWWA C515. Valves shall have an epoxy coated cast iron or ductile iron body, bronze stem, and a double sealing permanently bonded fully encased gate. The thrust bearing recess and stem opening in the bonnet shall be bronze bushed. The waterway shall be smooth and shall have no depressions or cavities in seat area where foreign material can lodge and prevent closure or sealing. Valve stem shall have O-ring seals. The O-ring stem seal shall be so designed that the seal above the stem collar can be replaced with the valve under pressure in the full open position. Bolts, nuts, washers, and other attachment hardware for the bonnet, stuffing box, and operating nut shall be AISI Type 316 stainless steel. Valves shall have manufacturer's name, pressure rating, and year manufactured casted on body. Tapping valves shall be manufactured by American AVK, American Flow Control, Clow Valve Co., Kennedy Valve Co., M&H Valve Co, Mueller Co., or U.S. Pipe.

506.2.4 Valve Boxes

Valve boxes shall be manufactured in the U.S.A. Valve boxes shall be a cast iron with a 5¼-inch diameter screw-type shaft. Valve box shall provide a minimum of 18 inches of vertical adjustment unless otherwise noted. Cover shall be marked "Water". Valve boxes shall be a three piece box with a number 6 base. Valve boxes shall be Tyler/Union Series 6860 or East Jordan Series 8560.

506.2.5 Valve Box Mounting Adapter

Valve box mounting adapter shall be made from a rubber compound. The valve box mounting adapter for gate valve boxes shall be Valve Box Adaptor II #6 Base as manufactured by Adaptor Inc. or equal.

506.3 Construction Methods

The Contractor shall comply with all applicable AWWA and manufacturer recommendations and specifications for proper installation of materials. The valve shall be opened and closed at least one time prior to installation in the presence of the water utility inspector.

The contractor shall excavate the area for the installation of the tapping sleeve, valve, and tapping machine. After installing the tapping sleeve, the valve shall be set on a 4x8x16 inch solid concrete block with the long side of the block set perpendicular to the water main. Pipe bedding material shall be tamped in place from a point above the main to a point 6 inches above the bottom of the valve box base to prevent the valve box or base from shifting.

A valve box shall be set over all valves. The valve box shall be set on a valve box mounting adapter. The mounting adapter shall be set and leveled. Valve boxes and covers shall be centered over the valve operating nut and the entire box assembly secured in place before backfilling operations. The contractor shall furnish and install valve box extensions, if necessary, to adjust the top of the box to final grade. The area around the valve box shall be backfilled with sand or gravel. Valve boxes that become shifted or filled during backfilling shall be entirely uncovered and reset.

506.4 Testing

The valve shall be opened and closed not less than two additional times before the tapping machine is removed in the presence of the water utility inspector. The number of turns to open and close the valve shall be recorded each time. After testing for proper operation, the valve shall be closed and the tapping machine shall be removed so the valve may be inspected for leakage.

506.5 Measurement and Payment

Tapping sleeves and valves completed in accordance with this contract shall be measured separately as a unit. The tapping sleeve and valve shall be paid per unit installed. Price shall be payment in full for all materials; for all excavation, sheeting, and shoring; for furnishing and installing bedding, backfill, and blocking; for furnishing and installing tapping sleeve, valve, valve box, and valve box mounting adapter; for making connections; for making a live tap; for backfilling, grading, and cleaning up; and for all labor, tools, equipment, and incidentals necessary to complete the work in accordance with the contract.

The City will pay for measured quantities at the contract unit price under the following bid items:

ITEM #	DESCRIPTION	UNIT
506.01	6” x 4” Tapping Sleeve and 4” Valve (_OR, _OL)	EACH
506.02	6” x 6” Tapping Sleeve and 6” Valve (_OR, _OL)	EACH
506.03	8” x 4” Tapping Sleeve and 4” Valve (_OR, _OL)	EACH
506.04	8” x 6” Tapping Sleeve and 6” Valve (_OR, _OL)	EACH
506.05	8” x 8” Tapping Sleeve and 8” Valve (_OR, _OL)	EACH
506.06	10” x 4” Tapping Sleeve and 4” Valve (_OR, _OL)	EACH
506.07	10” x 6” Tapping Sleeve and 6” Valve (_OR, _OL)	EACH
506.08	10” x 8” Tapping Sleeve and 8” Valve (_OR, _OL)	EACH
506.09	10” x 10” Tapping Sleeve and 10” Valve (_OR, _OL)	EACH
506.10	12” x 4” Tapping Sleeve and 4” Valve (_OR, _OL)	EACH
506.11	12” x 6” Tapping Sleeve and 6” Valve (_OR, _OL)	EACH
506.12	12” x 8” Tapping Sleeve and 8” Valve (_OR, _OL)	EACH
506.13	12” x 12” Tapping Sleeve and 12” Valve (_OR, _OL)	EACH
506.14	16” x 4” Tapping Sleeve and 4” Valve (_OR, _OL)	EACH
506.15	16” x 6” Tapping Sleeve and 6” Valve (_OR, _OL)	EACH
506.16	16” x 8” Tapping Sleeve and 8” Valve (_OR, _OL)	EACH
506.17	16” x 12” Tapping Sleeve and 12” Valve (_OR, _OL)	EACH

Page Intentionally Left Blank

SECTION 507

FIRE HYDRANTS

507.1 General

This section describes installation of fire hydrants. Fire hydrants include all labor, material, and equipment necessary to furnish and install bedding, backfill, and blocking; and to furnish, install, and test fire hydrants as shown and specified.

507.2 Materials
507.3 Submittals

The Contractor shall submit manufacturer's data and shop drawings for fire hydrants.

507.4 Fire Hydrants

Fire hydrants shall be traffic pattern, dry barrel fire hydrants meeting the requirements of AWWA C502. Fire hydrants shall be designed for a 250 psi working pressure. Fire hydrants shall have a 5¼-inch main valve opening, 6-inch mechanical joint with two 2½-inch hose connections, one 4½-inch engine connection, O-ring seals, and compression type shutoff. Connections shall have National Standard hose coupling threads and be factory lubricated. Fire hydrants shall have 1½-inch Pentagon shape operating and outlet nozzle cap nuts. Each nozzle cap shall have a chain loop and chain attached to the upper barrel or nozzle section. All bolts, nuts, washers, and other buried attachment hardware shall be AISI Type 316 stainless steel. External surfaces above grade shall be coated with an epoxy primer and a two-part polyurethane Safety Yellow top coating. Hydrants shall have a ductile iron shoe with an epoxy lining meeting the requirements of AWWA C550. The direction to open the hydrant shall be as shown on the drawings.

The entire main valve and drain assembly shall be ductile iron with fully encapsulated EPDM rubber or bronze, with the exception of the bottom plate, which shall be epoxy coated cast or ductile iron. Hydrants shall be equipped with no less than 1 drain valve and 2 drain outlets.

All hydrants shall be of the traffic model design consisting of a safety flange and a safety sleeve coupling. The design shall permit rotation of the upper barrel to position the nozzle in any direction. The nozzle placement shall not be restricted by bolt hole placement.

Hydrant length shall provide a minimum of 6'-6" cover over inlet pipe, unless otherwise noted. Fire hydrants shall be AVK 2780, Mueller Super Centurion® 250™, Waterous Pacer Model WB67-250 (16-inch upper standpipe).

507.5 Fire Hydrant Branches

Fire hydrant branches shall be AWWA C900 DR18 Polyvinyl chloride pressure pipe.

507.6 Construction Methods
507.6.1 General

The Contractor shall comply with all applicable AWWA and manufacturer recommendations and specifications for proper installation of materials. The hydrant and hydrant branch shall be installed as shown in the detail. The contractor shall field verify the depth of bury for each hydrant location prior to ordering hydrants.

Hydrants shall be set on a 4x8x16 inch solid concrete block. Immediately before installation, the Contractor shall make sure that the hydrant has been thoroughly inspected, cleaned on the interior, and opened and closed as many times as necessary to determine that all parts are in proper working order. All joints between hydrant and hydrant tee shall be restrained with a joint restraint system. Hydrants barrels shall be encased in polyethylene encasement.

507.6.2 Location and Position

Hydrants shall be located as shown or as required so as to provide complete accessibility and minimize the possibility of damage from vehicles or injury to pedestrians. When the hydrant is placed behind the curb, the hydrant shall be set so that no portion of the hydrant or hose nozzle cap will be less than 6 inches nor more than 12 inches from the gutter face of the curb. When the hydrant is set in the lawn space between the curb and the sidewalk or between the sidewalk and the property line, the hydrant shall be set so that no portion of the hydrant or nozzle cap will be within 6 inches of the sidewalk.

All hydrants shall stand plumb and shall have their nozzles parallel with, or at right angles to, the curb, with the pumper nozzle facing the curb. Hydrants shall be set to the established grade, with nozzles 24 inches above the ground unless otherwise shown or as required by the Engineer. A hydrant extension shall be provided if required by the Engineer.

507.6.3 Hydrant Drainage

Drainage shall be provided by placing drain rock around the hydrant to a minimum of 6 inches above the waste opening in the hydrant, and at least 1 foot around the hydrant. The top and sides of the drain rock shall then be covered with polyethylene encasement.

507.6.4 Hydrant Branches

Hydrant Branches shall be installed in accordance with Water Main Pipe and Fittings specification section.

507.7 Measurement and Payment
507.7.1 Fire Hydrant

Fire hydrants completed in accordance with this contract shall be measured separately as a unit. The fire hydrant shall be paid per unit installed. Price shall be payment in full for all materials; for excavation, sheeting, and shoring; for removing existing hydrants; for furnishing and

installing bedding, drainage rock, backfill, and blocking; for furnishing and installing hydrant and hydrant extension, if required; for backfilling, grading and cleaning-up; and for all labor, materials, equipment, tools, and incidentals necessary to complete and test the work in accordance with the contract.

507.7.2 Fire Hydrant Branch

Fire hydrant branches shall be measured by the lineal foot in place along the centerline of pipeline from the centerline of the tee to the centerline of the hydrant. Fire hydrant branches shall be paid at the contract unit price per lineal foot. This price shall be payment in full for all materials; for excavation, sheeting, and shoring; for removing existing hydrant branches; for bedding, backfill, and blocking; for forming foundation; for furnishing and installing pipe; for making connections; for grading, backfilling, and cleaning up; and for all labor, materials, tools, equipment, and incidentals necessary to complete and test the work in accordance with the contract.

The City will pay for measured quantities at the contract unit price under the following bid items:

ITEM #	DESCRIPTION	UNIT
507.01	Fire Hydrant (_OR, _OL)	EACH
507.02	6” Fire Hydrant Branch	LF

Page Intentionally Left Blank

SECTION 508

WATER SERVICES

508.1 General

This section describes construction of water services. Water services include all labor, material, and equipment necessary to furnish, install, and test, under actual operating conditions, 1-inch to 2-inch water service pipelines as shown and specified on the plans or as required by the Engineer.

508.2 Materials

508.2.1 General

All materials for the water services shall be new and meet the requirements of NSF/ANSI 372 for no lead compliant. All corporation stops, curb stops, and fittings shall meet the requirements of AWWA C800. Corporation stops, curb stops, and fittings shall be rated for a minimum work pressure of 150 psi.

508.2.2 Submittals

The Contractor shall submit manufacturer's data for corporation stops, couplings, curb stops, service tubing, and service saddles.

508.2.3 Service Tubing

508.2.3.1 Polyethylene Tubing

Polyethylene (PE) tubing shall be pressure class 200 polyethylene water tubing conforming to the requirements of AWWA C901, NSF/ANSI 61, and ASTM D2239. Polyethylene tubing shall have a SDR of 9 and shall have the outside diameter dimensions of copper tubing. Polyethylene tubing shall be manufactured from materials having a standard PE code designation of PE 3408, PE 3608, or PE4710.

508.2.3.2 Copper Tubing

Copper tubing for the property owner's side of the curb stop shall be Type K soft annealed seamless copper water tubing conforming to ASTM B88 if required.

508.2.4 Couplings and Fittings

Couplings and fittings shall be cast brass with a uniform wall thickness and strength, and shall be free of defects. Couplings and fittings shall be compression pack type joint for use with copper or polyethylene tubing. Couplings shall be Ford C44-44-NL, C44-66-NL, C44-77-NL, A.Y. McDonald 74758-22, or equal.

508.2.5 Insert Stiffeners

Insert stiffeners for polyethylene tubing shall be AISI Type 304 stainless steel. Insert stiffeners shall be dimpled and flanged to maintain placement within the service tubing.

508.2.6 Corporation Stops

Corporation stops for 1-inch services shall have inverted plug style valves and AWWA standard thread inlets and tube compression outlets. Corporation stops for 1-inch services shall be Ford F1000-4-NL, A.Y. McDonald 74701-22, or equal.

Corporation stops for 1½-inch and 2-inch services shall have ball style valves. Corporation stops shall have AWWA standard thread inlets and tube compression outlets. Corporation stops for 1½-inch and 2-inch services shall be Ford FB1000-6-NL, Ford FB1000-7-NL, A.Y. McDonald 74701B-22, or equal.

508.2.7 Service Saddles

Service saddles shall be of the double bolt saddle clamp type. Service saddles shall have NBR (nitrile butadiene), SBR (styrene butadiene), or neoprene gaskets and AISI Type 304 stainless steel bodies and hardware. Outlet threads shall be tapered meeting the requirements of AWWA C800. Service saddles for 4-inch to 12-inch diameter pipe shall be Romac 306 or equal. Service saddles for 14 inch to 24 inch diameter pipe shall be of the double bolt or triple bolt saddle clamp type. Service saddles for 14 inch to 24 inch diameter pipe shall be Romac 305 or equal.

508.2.8 Curb Stops

Curb stops for 1-inch services shall have inverted plug style valves and tube compression inlets and outlets. Curb stops for 1-inch services shall be Ford Z44-444-NL, A.Y. McDonald 74713-22, or equal.

Curb stops for 1½-inch and 2-inch services shall have ball style valves and tube compression inlets and outlets. Curb stops for 1½-inch and 2-inch services shall be Ford B44-666-NL, Ford B44-777-NL, A.Y. McDonald 76100-22 or equal.

508.2.9 Curb Stop Boxes

Curb boxes shall have an arch pattern base, 1¼-inch upper section, and Mueller 89375 lid with 1-inch pentagon plug. Curb box shall have an extended length of 7'-0" and shall have 12 inches of adjustment. Curb boxes shall be Mueller H-10306.

508.2.10 Valve Boxes

Valve boxes shall be manufactured in the U.S.A. Valve boxes shall be a cast iron with a 5¼-inch diameter screw-type shaft. Valve box shall provide a minimum of 18 inches of vertical adjustment unless otherwise noted. Cover shall be marked "Water". Valve boxes shall be a two piece box. Valve boxes shall be Tyler/Union Series 6850 or East Jordan Series 8550.

508.2.11 Valve Box Mounting Adapter

Valve box mounting adapter shall be made from a rubber compound. The valve box mounting adapter shall be Valve Box Adaptor II Multi-Fit as manufactured by Adaptor Inc. or equal.

508.3 Construction Methods

508.3.1 General

The Contractor shall locate and verify the existing water service material. The existing water service pipe/tubing may be lead, Tube-Loy, galvanized wrought iron, copper, or polyethylene. The Contractor shall provide all necessary couplings and fittings for reconnection of the existing water service. The Contractor shall install a bag anode at all connection points to existing metal water services. The Contractor shall comply with all applicable AWWA and manufacturer recommendations and specifications for proper installation of materials.

Water services shall only be connected to new or modified water mains after a safe bacteriological sample has been obtained and the water main has been placed in service. When existing water services are replaced or modified, they shall not be disconnected for more than 4 hours. The minimum size of new water services shall be 1 inch, unless otherwise noted. A new water service shall consist of a service saddle when required, corporation stop, polyethylene service tubing, curb stop, curb/valve box, stick anode, bag anode (if required), and coupling (if required). The corporation stop and curb stop shall be the same size as the service tubing. The new water service shall be installed with the least amount of joints as possible, as determined by the Engineer.

508.3.2 Water Service Tubing

Polyethylene tubing shall be provided from the corporation stop to the existing water service for all water service transfers regardless of the existing water service material. Polyethylene tubing shall be provided from the corporation stop to the curb stop regardless of the existing water service material.

508.3.3 Bedding

Water services shall have water main pipe bedding and the same backfill section as the water main unless otherwise noted.

508.3.4 Joining Tubing

The tubing shall be joined with compression pack type joint fittings in accordance with the manufacturer's instructions for the fittings provided. The tubing shall be cut square using a cutter designed for the type of pipe material being used. The outside ends of the polyethylene tubing shall be chamfered to remove sharp. A stiffener shall be inserted into the end of the polyethylene tubing prior to the tubing being inserted into the fitting.

508.3.5 Service Mainline Connections

Taps for water services shall only be made after a safe bacteriological safe sample has been obtained and the water main is placed in service. The tapping machine shall be designed to drill a hole in the water main slightly smaller than the inside diameter on the corporation stop. The tapping machine cutting tool shall be a shell-type cutter that will retain the pipe coupon and is designed to accommodate the wall thickness of AWWA C151 Class 53 ductile iron pipe, AWWA C900 DR 18 polyvinyl chloride pipe, or AWWA C905 DR 18 polyvinyl chloride pipe. The corporation stop shall be installed by placing two layers of 3-mil TFE tape on the male threads of the corporation stop and threading it into the water main or service saddle.

The corporation stop shall be wrapped in plastic to protect it from dirt and damage until the water service tube/pipe is connected. A plug shall be installed in the corporation stop if no water service pipe is to be provided.

508.3.5.1 Ductile Iron Main

The Contractor shall connect water services to ductile iron water mains in accordance with the preferred method listed in AWWA C600 Sec. 4.6 (Figure 5). Corporation stops for 1-inch water service sizes shall be direct-tapped when three full threads can be obtained. A service saddle shall be used when three full threads cannot be obtained. A service saddle shall be used for connecting 1½-inch and 2-inch water services to 6-inch to 12-inch diameter pipelines. The Contractor direct tap a 16-inch and larger pipeline when three full threads can be obtained or may use a service saddle. The tap for the corporation stop shall be located a minimum of one foot from any pipe or fitting joint and shall have a minimum of one foot of clearance between taps.

508.3.5.2 Polyvinyl Chloride Main

The Contractor shall connect water services to polyvinyl chloride water mains in accordance with the method listed in AWWA C605 Sec. 6.4.2. The Contractor shall adhere to the recommended safety precautions in AWWA C605 Sec.6.4.3 when tapping a pressurized polyvinyl chloride pipe. Service connections to polyvinyl chloride water mains shall be made with a corporation stop installed in a service saddle.

The tap for the corporation stop shall be located a minimum of two feet from any pipe or fitting joint and shall have a minimum of 2 feet of clearance between taps. Dry tapping a new polyvinyl chloride water main may be allowed with approval from the Engineer.

508.3.6 Alignment and Grade

Unless otherwise required by the Engineer, water services shall be constructed at a right angle to the roadway except in cul-de-sacs, where the water service shall be installed at the shortest route from the water main to the location of the sewer lateral at the edge of the road right-of-way. When installing new water services on existing streets, the water services shall be located in grass areas to avoid existing surface features such as driveways, trees, sidewalks, etc. as required

by the Engineer. When transferring an existing water service to a new water main, the corporation stop shall be installed within 2 feet of a right angle from the tap on the existing water main to the reconnection point on the new water main.

New water services shall be constructed with a minimum cover of 6½ feet. The Contractor shall furnish and install insulation where 6½ feet of cover cannot be maintained. Replacement water services shall be constructed with a minimum cover of 6½ feet except for the last three feet. The last three feet of water service shall be raised or lowered to connect to the existing service pipe. The Contractor shall furnish and install insulation on all exposed piping on the property owner's side of the curb stop that will have less than 6½ feet of cover from proposed grade.

508.3.7 Curb Stop

Curb stops shall be placed at a depth between 6½ and 7 feet below final grade. The Contractor shall install the curb stops as shown on the plan or as required by the Engineer. In new subdivisions, the Contractor shall be responsible to install the curb stops within 6 inches of the edge of the street right-of-way.

508.3.8 Existing Service Tubing Connection

Polyethylene tubing shall be used to connect the curb stop to the existing water service if the existing pipe material on the owner's side of the curb stop is polyethylene. Copper tubing shall be used to connect the curb stop to the existing water service pipe if the existing pipe material on the owner's side of the curb stop is metallic. A copper or plastic disc shall be inserted in the curb stop on the property owner side if no service tube is provided.

508.3.9 Curb Box Installation

A curb box shall be set over 1-inch curb stops only when the curb stop is connected to an existing water service. Curb boxes for 1-inch curb stops shall be centered over the curb stop and shall be brought to proper grade. The bottom of the curb box shall be set on a 2x6 by 8-inch hardwood block. Clearance shall be provided so that the curb box does not rest upon the water service pipe.

The curb box shall be plumbed and braced so it will remain vertical throughout the backfilling. Sufficient excavation shall be made for the curb box installation to insure proper setting and backfilling around the curb box. The area around the curb box shall be backfilled with sand or gravel. Curb boxes that become shifted or filled during backfilling shall be entirely uncovered and reset.

Before placing backfill around the curb box, the Contractor shall wrap polyethylene around the base and the pipeline bedding material shall be tamped in place from a point above the water service tube to a point 12 inches above the base.

508.3.10 Valve Box Installation

A two piece valve box with a valve box mounting adapter shall be set over 1½-inch and 2-inch curb stops only when the curb stop is connected to an existing water service. The valve box mounting adapter shall be set on a 2x6 by 18-inch hardwood block. Valve boxes and covers shall be centered over the curb stop operating nut and the entire box assembly secured in place before backfilling operations begin. The contractor shall adjust the top of the valve box to match final grade. The contractor shall furnish and install valve box extensions, if necessary, to adjust the top of the box to final grade. The area around the valve box shall be backfilled with sand or gravel. Valve boxes that become shifted or filled during backfilling shall be entirely uncovered and reset.

508.3.11 Testing

The water service installation shall be tested for leaks prior to the placement of backfill and before the curb box is installed. The corporation stop at the water main shall be turned on and the curb stop opened until a full flow of water is obtained. The curb stop shall then be turned off and all joints and couplings checked for leaks. Upon acceptance of the water service, the remainder of the installation work shall be completed.

508.4 Measurement and Payment

508.4.1 Water Service Transfers

Water service transfers will be paid by the lineal foot in place, and the quantity measured for payment shall be the number of lineal feet in place at the unit price listed in the proposal schedule for the various sizes completed and accepted in accordance with the contract, measured along the horizontal centerline of the water service from the corporation stop to the coupling connecting to the existing water service. A minimum of 5 lineal feet will be paid for each water service transfer to the new water main.

The quantity of water service, measured as specified herein, will be paid at the contract unit price per lineal foot of the various sizes of water service transfers. This price shall be payment in full for all materials, including service saddle, corporation stop, water service tubing, couplings, fittings, and blocking; for all site preparation and trenching; for bedding, backfill, and blocking; for making connections to the water main; for providing corporation stop and water service tubing; for furnishing and installing anodes; for locating and reconnecting to existing water service; for backfilling, grading, and cleaning-up; and for all labor, tools, equipment, and incidentals necessary to complete the work in accordance with the contract.

508.4.2 New or Replaced Water Services

New or replaced water services will be paid by the lineal foot in place, and the quantity measured for payment shall be the number of lineal feet in place at the unit price listed in the proposal schedule for the various sizes completed and accepted in accordance with the contract, measured along the horizontal centerline of the water service from the corporation stop to the end of the new water service. A minimum of 5 lineal feet will be paid for each new or replaced water service.

The quantity of water service, measured as specified herein, will be paid at the contract unit price per lineal foot of the various sizes of new or replaced water service. This price shall be payment in full for all materials, including service saddle, corporation stop, curb stop, water service tubing, couplings, fittings, blocking; for all site preparation and trenching; for bedding and backfill; for making connections to the water main; for providing corporation stop, water service tubing, and curb stop; for furnishing and installing anodes and curb box or valve box; for locating and reconnecting to existing water service; for backfilling, grading, and cleaning-up; and for all labor, tools, equipment, and incidentals necessary to complete the work in accordance with the contract.

The City will pay for measured quantities at the contract unit price under the following bid items:

ITEM #	DESCRIPTION	UNIT
508.01	¾” or 1” PE Water Service Transfer	LF
508.02	1½” PE Water Service Transfer	LF
508.03	2” PE Water Service Transfer	LF
508.04	1” New or Replaced PE Water Service	LF
508.05	1½” New or Replaced PE Water Service	LF
508.06	2” New or Replaced PE Water Service	LF

Page Intentionally Left Blank

SECTION 509

PERMANENT AIR RELEASE ASSEMBLIES

509.1 General

This section describes construction of permanent air release assemblies to remove the air from the water main. Permanent air release assemblies include all labor, material, and equipment necessary to furnish and install bedding, backfill, and blocking; to furnish, install, and test permanent air release assemblies including corporation stop, curb stop with drain, copper piping, couplings, plug, and valve box and cover as shown and specified on the plans or as required by the Engineer.

509.2 Materials

509.2.1 General

All materials for permanent air release assemblies shall be new and meet the requirements of NSF/ANSI 372 for no lead compliant. All corporation stops, curb stops, and fittings shall meet the requirements of AWWA C800. Corporation stops, curb stops, and fittings shall be rated for a minimum work pressure of 150 psi.

509.2.2 Submittals

The Contractor shall submit the manufacturer's data for all corporation stops, brass service couplings, curb stops, copper water service piping, and valve box and cover.

509.2.3 Service Tubing

The service tubing shall be Type K soft annealed seamless copper water tubing conforming to ASTM B88.

509.2.4 Couplings and Fittings

Couplings and fittings shall cast brass with a uniform wall thickness and strength, and shall be free of defects. Couplings and fittings shall be of the compression pack type joint for use with copper tubing. Couplings shall be Ford C44-44-NL, A.Y. McDonald 74758-22, or equal.

509.2.5 Corporation Stops

Corporation stops shall have inverted plug style valves with AWWA standard thread inlets and tube compression outlets. Corporation stops shall be Ford F1000-4-NL, A.Y. McDonald 74701-22, or equal.

509.2.6 Curb Stops With Drain

Curb stops shall have inverted plug style valves with tube compression inlets and outlets and a drain. Curb stops shall be Ford Z44-444SW-NL or equal.

509.2.7 Service Saddles

Service saddles shall be of the double bolt saddle clamp type. Service saddles shall have NBR (nitrile butadiene), SBR (styrene butadiene), or neoprene gaskets and AISI Type 304 stainless steel bodies and hardware. Outlet threads shall be tapered meeting the requirements of AWWA C800. Service saddles for 4-inch to 12-inch diameter pipe shall be Romac 306 or equal. Service saddles for 14 inch to 24 inch diameter pipe shall be of the double bolt or triple bolt saddle clamp type. Service saddles for 14 inch to 24 inch diameter pipe shall be Romac 305 or equal.

509.2.8 Valve Boxes

Valve boxes shall be manufactured in the U.S.A. Valve boxes shall be a cast iron with a 5¼-inch diameter screw-type shaft. Valve box shall provide a minimum of 18 inches of vertical adjustment unless otherwise noted. Cover shall be marked "Water". Valve boxes shall be a two piece box. Valve boxes shall be Tyler/Union Series 6850 or East Jordan Series 8550.

509.3 Construction Methods

A permanent air release assembly shall consist of a tapping saddle, 1-inch corporation stop, 1-inch copper service pipe, 1-inch curb stop with drain, 1-inch coupling adapter, 1-inch plug, and valve box with cover. The Contractor shall comply with all applicable AWWA and manufacturer recommendations and specifications for proper installation of materials.

509.3.1 Joining Pipe

The pipe shall be joined with compression type fittings in accordance with the manufacturer's instructions for the fittings provided. All ends shall be cut squarely and rough edges of burrs removed.

509.3.2 Bedding

Unless otherwise noted, air release assemblies shall have Green Bay Water Utility pipeline bedding.

509.3.3 Connection to Water Main
509.3.3.1 Ductile Iron Main

The Contractor shall install direct taps, on the top of the main, in accordance with the preferred method listed in AWWA C600 Sec. 4.6 (Figure 5). The tap for the corporation stop shall be located a minimum of two feet from any pipe or fitting joint and shall have a minimum of two feet of clearance between taps.

509.3.3.2 Polyvinyl Chloride Main

The Contractor shall install service saddles with corporation stop on the top of the main in accordance with the method listed in AWWA C605 Sec. 6.4.2. The Contractor's drilling machine shall have a core-cutting tool of the shell design that retains the coupon cut while penetrating the pipe wall. Twist drill bits and auger bits shall be prohibited when tapping polyvinyl chloride pipe. The Contractor shall adhere to the recommended safety precautions in AWWA C605 Sec.6.4.3 when tapping a polyvinyl chloride pipe. The tap for the corporation stop shall be located a minimum of two feet from any pipe or fitting joint and shall have a minimum of two feet of clearance between taps.

509.3.4 Valve Box Installation

The valve box shall be set on a 4x8x16 inch solid concrete block with the long side of the block set perpendicular to the water main. Pipe bedding material shall be tamped in place from above the main to a point 6" above the bottom of the valve box base to prevent the valve box or base from shifting. A sheet of polyethylene shall be placed over the blocking to prevent bedding material from entering around the curb stop.

The valve box and cover shall be centered over the curb stop and the entire box assembly secured in place before backfilling operations. The area around the valve box shall be backfilled with sand or, if specifications require, gravel. Valve boxes that become shifted or filled shall be entirely uncovered and reset.

509.4 Measurement and Payment

Permanent air release assemblies completed in accordance with this contract shall be paid per unit installed. Price shall be payment in full for all excavation, sheeting, and shoring; furnishing and installing tapping saddle, corporation stop, curb stop with drain, copper tubing, brass fittings, and valve box; furnishing and installation of bedding, backfill, and blocking; for grading, making connections, backfilling, and cleaning up; and all labor, tools, equipment, and incidentals necessary to complete the work in accordance with this contract.

The City will pay for measured quantities at the contract unit price under the following bid item:

ITEM #	DESCRIPTION	UNIT
509.01	1" Permanent Air Release Assembly	EACH

Page Intentionally Left Blank

SECTION 510

TEMPORARY FLUSH PIPES

510.1 General

This section describes installation of temporary flush pipes to remove the air from the water main during flushing and pressure testing procedure. Temporary flush pipes include all labor, materials, and equipment necessary to furnish and install all bedding, backfill, and blocking; and to furnish, install, test, and remove temporary flush pipes as shown on the plans or as required by the Engineer.

510.2 Materials

510.2.1 General

All permanent materials for the temporary flush pipes shall meet the requirements of NSF/ANSI 372 for no lead compliant. All corporation stops and fittings shall meet the requirements of AWWA C800. Corporation stops and fittings shall be rated for a minimum work pressure of 150 psi.

510.2.2 Submittals

The Contractor shall submit manufacturer's data for all corporation stops and fittings.

510.2.3 Water Service Pipe

The water service pipe shall be polyethylene or copper that meets AWWA potable water standards.

510.2.4 Corporation Stops

Corporation stops for 1-inch flush pipes shall have inverted plug style valves with AWWA standard thread inlets and tube compression outlets. Corporation stops for 1-inch flush pipes shall be Ford F1000-4-NL, A.Y. McDonald 74701-22, or equal.

Corporation stops for 2-inch flush pipes shall have ball style valves with AWWA standard thread inlets and tube compression outlets. Corporation stops for 2-inch services shall be Ford FB1000-7-NL, A.Y. McDonald 74701B-22, or equal.

510.2.5 Owner Furnish Material

The water utility will furnish a mechanical joint plug or cap with a gasket, mechanical joint restraining gland, and bolts. The plug or cap will have a 2" NPT pre-tapped hole.

510.3 Construction Methods
510.3.1 General

The Contractor shall comply with all applicable AWWA and manufacturer recommendations and specifications for proper installation of materials. Temporary flush pipes consist of a brass coupling, corporation stop, curb stop, and water service piping. The contractor shall remove the water service pipe and curb stop after flushing and pressure testing.

510.3.2 Connection to Water Main

Corporation stops for temporary flush pipes shall be installed into a 2" NPT pre-tapped owner furnished fitting. The contractor shall provide the appropriate fittings necessary to connect the corporation stop to the owner-furnished fitting.

510.4 Measurement and Payment

Temporary flush pipes completed in accordance with this contract shall be paid per unit installed. Price shall be payment in full for all material; for all excavation, sheeting, and shoring; for furnishing, installing, and testing of fittings and corporation stop; for furnishing, installing, testing, and removal of the curb stop and water service piping; for furnishing and installing bedding, backfill, and blocking; for making connections, backfilling, grading, and cleaning up; and all labor, tools equipment, and incidentals necessary to complete the work in accordance with this contract.

If the Contractor requests additional temporary flush pipes for his convenience, that are not shown on the plans or required by the Engineer; the Contractor may, with the approval of the Engineer, provide the additional flush pipes at no additional cost to the Owner.

The City will pay for measured quantities at the contract unit price under the following bid item:

ITEM #	DESCRIPTION	UNIT
510.01	1" Temporary Flush Pipe	EACH
510.02	2" Temporary Flush Pipe	EACH

SECTION 511

FLUSH HYDRANT ASSEMBLIES

511.1 General

This section describes installation of flush hydrant assemblies. Flush hydrant assemblies include all labor, materials, and equipment necessary to furnish and install bedding, backfill, and blocking; and to furnish, install, and test flush hydrants as shown and specified or as required by the engineer.

511.2 Materials

511.2.1 Flush Hydrant

Flush hydrant shall have a 2” horizontal female iron pipe thread inlet, a 2” NPT nozzle outlet, a top-mounted 9/16” square operating nut and be non-freezing, self-draining with a minimum of 6’-6” bury. Flush hydrant shall open by turning the operating nut to the left (counterclockwise). The drain outlet shall be sealed in all positions from 1/4 open to fully open. The inlet, outlet and all internal working parts shall meet the requirements of NSF/ANSI 372 for no lead compliant. Flush hydrant shall fit in a 5¼” valve box. All working parts shall be serviceable from above with no excavating required. Flush hydrant shall be Truflo Model TF500 as manufactured by The Kupferle Foundry Co. or equal.

511.2.2 Valve Box

Valve boxes shall be manufactured in the U.S.A. Valve boxes shall be a cast iron with a 5¼-inch diameter screw-type shaft. Valve box shall provide a minimum of 18 inches of vertical adjustment unless otherwise noted. Cover shall be marked "Water". Valve boxes shall be a two piece box. Valve boxes shall be Tyler/Union Series 6850 or East Jordan Series 8550.

511.2.3 Pipe and Fittings

Pipe and fittings shall be 2-inch Schedule 40 brass with National Pipe Thread connections.

511.3 Construction Method

Flush hydrant assemblies consist of a flush hydrant, valve box, pipe, and fittings as necessary to achieve the correct final grade. The Contractor shall comply with all applicable AWWA and manufacturer recommendations and specifications for proper installation of materials.

511.3.1 General

Flush hydrants shall be set on a 4x8x16 inch solid concrete block. Immediately before installation, the interior of the flush hydrant shall be thoroughly inspected and cleaned. The flush hydrant shall be opened and closed as many times as necessary to determine if all parts are in proper working order.

511.3.2 Location and Position

Flush hydrants shall be located as shown, or as required, so as to provide complete accessibility and minimize the possibility of damage from vehicles or injury to pedestrians. Flush hydrants shall be plumb and centered in a valve box. The flush hydrant assembly operating nut shall be located 6” below the top of the valve box. The top of the valve box shall be flush with finished grade unless otherwise shown or required by the Engineer.

511.3.3 Flush Hydrant Drainage

Drainage shall be provided by placing drain rock at least 1 foot around the base of the flush hydrant to a minimum of 6 inches above the waste opening in the flush hydrant. The top and sides of the drain rock shall then be covered with polyethylene encasement.

511.3.4 Joining Pipe

The pipe and threaded fittings shall be installed in accordance with the manufacturer's instructions.

511.3.5 Bedding

Flush hydrant assemblies shall have Green Bay Water Utility pipeline bedding, unless otherwise noted.

511.3.6 Connection to Water Main

Brass piping for flush hydrant assemblies shall be installed into a 2-inch tapped hole in a cap.

511.3.7 Valve Box Installation

The valve box shall be set on 4x8x16 inch solid concrete blocks. A valve box and cover shall be centered over the flush hydrant and the entire box assembly secured in place before backfilling. The area around the valve box shall be backfilled with sand or gravel. Valve boxes that become shifted or filled during backfilling shall be entirely uncovered and reset.

511.4 Measurement and Payment

Flush hydrant assemblies completed in accordance with this contract shall be paid per unit installed. Price shall be payment in full for all materials; for excavation, sheeting, and shoring; for furnishing, installing, and testing of the piping, fittings, flush hydrant, and valve box; furnishing and installing of all bedding, backfill, and blocking; for making connections; for backfilling, grading, and cleaning up; and all labor, tools, equipment, and incidentals necessary to complete the work in accordance with this contract.

The City will pay for measured quantities at the contract unit price under the following bid item:

ITEM #	DESCRIPTION	UNIT
511.01	2” Flush Hydrant Assembly	EACH

SECTION 512

REMOTE WATER MAIN PLUGS

512.1 General

This section describes the installation of remote water main plugs or caps for disconnecting water main that will be abandoned from the water main that remains in service for areas that are not adjacent to the water main construction. Remote water main plugs include all labor, material, equipment, and services necessary to properly plug or cap water mains or fittings as shown on construction plans or as required by the Engineer.

All costs involved in plugging or capping water mains or fittings that are adjacent to water main construction work, and are required in order to install the new water main in compliance with this contract, shall be included in the unit price of the associated work.

512.2 Materials

Plugs or caps shall conform to the requirements of AWWA C153 (ANSI A21.53). Fittings shall be Pressure Class 350 ductile iron. Fittings shall have mechanical joints that conform to the requirements of AWWA C111 (ANSI A21.11). Fittings shall be cement-mortar lined in accordance with AWWA C104 (ANSI A21.4). Cement-mortar lining shall be standard thickness, unless otherwise noted. The exterior of the fitting shall have an asphaltic coating, unless otherwise noted. All gaskets shall be plain rubber made of styrene butadiene copolymer.

512.3 Construction Method

The Contractor shall comply with all applicable AWWA and manufacturer recommendations and specifications for proper installation of materials. The contractor shall plug portions of existing water mains or fittings after the new water mains have been placed in service. The locations of these remote plugs are show on the plans or will be designated by the Engineer. The contractor shall remove and dispose of pavements, perform all excavations as necessary, install caps on the water main or plugs on fittings, and provide blocking necessary to complete the work in accordance with this contract.

512.4 Method and Payment

Remote water main plugs completed in accordance with this contract shall be paid per unit installed. The unit price shall be payment in full for all labor, materials, and equipment necessary for all excavation, including the removal and disposal of any pavements; for furnishing and installing all bedding, fittings, backfill, and blocking; for making connections; for backfilling, grading, and cleaning up; and any incidentals necessary to complete the work in accordance with this contract.

The City will pay for measured quantities at the contract unit price under the following bid item:

ITEM #	DESCRIPTION	UNIT
512.01	Remote Water Main Plug	EACH

Page Intentionally Left Blank

SECTION 513

WATER MAIN CONSTRUCTION STAKING

513.1 General

This section describes the survey layout work for installation of the proposed water facilities.

Water main construction staking includes furnishing and setting of construction stakes necessary to establish the location, grade, and alignment of water mains, water services, and other facilities, in accordance with the plans or as required by the Engineer. This work shall be completed under the supervision of a State of Wisconsin Registered Land Surveyor. **The Green Bay Water Utility will provide stationing for the required staking locations.**

513.2 Materials

The contractor shall provide all materials required to perform water main construction staking when staking is performed by the contractor.

513.3 Construction Method

Benchmark data, grades, and alignment shall be obtained or calculated from data in the plan and shall be verified with the Engineer prior to beginning the work. When necessary, this work shall include re-establishing the horizontal roadway alignment from alignment pull ties or control points furnished by the Engineer. It is unacceptable to establish the horizontal alignment from slope stakes.

Methods of survey and staking shall be approved by the Engineer prior to beginning the work. The degree of accuracy used in the survey work shall be consistent with Third Order, Class II.

The Contractor shall immediately notify the Engineer if, in the opinion of the Contractor, the plans are found to lack sufficient information for proper layout or a potential error is found.

513.3.1 General Requirements

The staking subcontractor shall obtain the final plans, special provisions, and specifications for the project from the Contractor. The Contractor is responsible to provide the staking subcontractor with any plan revisions that may occur after the contract is awarded. The staking subcontractor may also check directly with the Engineer to ensure that alignment, profiles, and grades have not changed from what is shown on the approved plan. The staking subcontractor shall compute grades and alignment from the most current set of approved plans. Immediately bring to the attention of the Engineer any discrepancies or errors.

The staking subcontractor shall field locate controlling plan survey data for the project. When necessary, establish horizontal and vertical control that is in compliance with Third Order Class II accuracy in relation to the existing project control. Do not stake out anything without first field verifying for accuracy. Verify grade of existing streets where new construction begins or ends.

Keep neat and accurate field notes of work being performed. Record all information in field books including a description of control and all related notes for this control. All survey notes and computations used in establishing the lines and grades shall be given to the Engineer within 10 days of completing the work.

Lath shall be painted blue and flagged after marking. Provide a complete cut-sheet indicating staking information for water main work to the Green Bay Water Utility within 24 hours of staking.

513.3.2 Staking Requirements

Set and maintain construction stakes as necessary to achieve the required accuracy and to support the method of operations. Locate all water main construction stakes to within 0.33 feet horizontally of the true position.

Place stakes for water main centerline every 100 feet along straight line runs; at every fitting, valve, hydrant, and change in grade; every 50 feet along curves with a radius of over 500 feet; every 25 feet along curves with a radius of 500 feet or less; or as required by the Engineer. Place offset stakes when required. The stakes may consist of painted marks when the point lands on concrete or asphalt. The stakes shall be wood lath for all other locations. The water main centerline stakes shall be marked with the station and of point. The water main offset stakes shall be marked with the station, description of point, offset distance, and cut.

513.4 Measurement and Payment

Water main construction staking shall be measured by the lineal foot that is acceptably completed in accordance with the contract. Water main construction staking shall be measured along the centerline of the water main.

The City will pay for measured quantities at the contract unit price under the following bid items:

ITEM #	DESCRIPTION	UNIT
513.01	Water Main Construction Staking	LF

DIVISION 6

ROAD CONSTRUCTION

SECTION 601

AGGREGATES & BASE

601.1 General

Perform work in accordance with the provisions of WisDOT Standard Specifications for Highway and Structure Construction Section 301, 305, 306, 310, 311, 312, 313, 315, 320, 325, 330, 335, 340, 350, and 390 except as hereinafter modified.

601.2 Materials

Quality Management

The Contractor must follow the Quality Management requirements as set herein. The City reserves the right to perform testing, and reduce payment as hereinafter described.

A. Source of Materials Report

The Contractor shall submit a source of materials report to the Engineer prior to or at the preconstruction meeting. This report shall include the following:

1. Source address
2. A name and phone number for the contact person for any needed information about the aggregate
3. Any testing information from the quarry or pit during the past four months
4. At least one sieve analysis and one fracture analysis of the aggregates prepared by an independent testing laboratory per WisDOT standards with the aggregate meeting the requirements of section 301 and 305 of the WisDOT Specifications

The City will accept base aggregate based on the Contractor data provided unless it is shown through City testing that the contractor's materials do not conform to the required specifications.

The City will consider the quality management testing incidental to the crushed aggregate base course bid item.

601.3 Construction Methods

Vacant

601.4 Measurement and Payment

The following unit weights will be used in converting weight to volume for the following materials:

Material	Unit Weight In-Truck	Unit Weight In-Place	Max Load In-Truck*	Max Load In-Place**
CABC ¾” or 1 ¼”	1.70 tons/cy	2.00 tons/cy	13.1 cy	11.1 cy
Breaker Run	1.50 tons/cy	1.75 tons/cy	14.8 cy	12.7 cy
Pit Run	1.50 tons/cy	1.75 tons/cy	14.8 cy	12.7 cy

*Based on an average tare for a quad-axel dump truck of 28,500-pounds with a 44,500-pound load.
**Uses the above tare & load weights with a 15% compaction factor.

A. Cubic Yard Measurement

If the bid item is measured by the cubic yard, then the quantity of aggregate for each item will be based on bid quantity and will be paid for at the contract unit price per cubic yard, which price shall be full compensation for furnishing, producing, crushing, screening, loading, hauling, placing, watering, drying and compacting; for maintaining; for preparing the foundation and for furnishing all labor, tools, equipment and incidentals necessary to complete the work.

There will be no adjustments to the bid quantity unless the scope of the project changes. Bid quantities are based on volume calculations determined from the typical plan section and cross section data.

B Ton Measurement

If the bid item is measured by the ton, then the quantities of aggregate for each item will be based on the weight reported on the tickets received by the Engineer for each load. Payment for the aggregate will not be made for any amount of material not substantiated by a ticket received by the Engineer. Tickets for aggregate delivered to the City of Green Bay project shall be accepted only from trucks whose volume is clearly marked on the box. The City reserves the right to measure the truck box to check the volume so marked.

Delivery tickets shall show the date, location where used, and weight of the truck (tare), total weight (truck & load), and the net weight (load only). They shall be numbered individually in a manner such that each ticket has a unique number. These delivery tickets shall be given to the Inspector daily, or if the Inspector is not available, the delivery tickets shall be given to the Engineering Division Office within two workdays after the material is delivered to the project area. Failure to provide these tickets in a timely manner may be cause to deny payment for the material.

Items measured by the ton shall be paid at the unit price per ton, which price shall be full compensation for furnishing, producing, crushing, screening, loading, hauling, placing, watering, drying and compacting; for maintaining; for preparing the foundation and for furnishing all labor, tools, equipment and incidentals necessary to complete the work.

C. Rubblized and Pulverized Pavement Measurement

The items Rubblized Pavement and Pulverized Pavement shall be measured and paid per square yard of pavement rubblized or pulverized as described above and in the WisDOT Specifications.

The City will pay for measured quantities at the contract unit price under the following bid item:

ITEM #	DESCRIPTION	UNIT
601.01	CABC, ¾”	TON
601.02	CABC, ¾”	CY
601.03	CABC, 1¼”	TON
601.04	CABC, 1¼”	CY
601.05	CABC, 3”	TON
601.06	CABC, 3”	CY
601.07	Shaping Shoulders	STA
601.08	Salvaged Asphaltic Pavement Base	TON
601.09	Salvaged Asphaltic Pavement Base	CY
601.10	Open Graded Base Course	TON
601.11	Open Graded Base Course	CY
601.12	Breaker Run	TON
601.13	Breaker Run	CY
601.14	Select Crushed Material	TON
601.15	Select Crushed Material	CY
601.16	Pit Run	TON
601.17	Pit Run	CY
601.18	Asphaltic Base	TON
601.19	6” Concrete Base	SY
601.20	7” Concrete Base	SY
601.21	8” Concrete Base	SY
601.22	6” Concrete Base HES	SY
601.23	7” Concrete Base HES	SY
601.24	8” Concrete Base HES	SY
601.25	6” Concrete Base SHES	SY
601.26	7” Concrete Base SHES	SY
601.27	8” Concrete Base SHES	SY
601.28	Pulverized Pavement	SY
601.29	Mill & Relay Pavement	SY
601.30	Rubblized Pavement	SY
601.31	Cracked & Seated Pavement	SY
601.32	Subbase	CY
601.33	Subbase	TON
601.34	Base Patching Asphaltic	TON
601.35	Base Patching Asphaltic	SY
601.36	Base Patching Concrete	TON
601.37	Base Patching Concrete	SY

D. Nonconforming Material

For material found to be a nonconforming material, the City will reduce pay by 10% of the contract price for the affected aggregate bid items, if the material is allowed to remain in place. The City will determine the quantity of nonconforming material.

SECTION 602

CONCRETE PAVEMENT

602.1 Description

Perform work in accordance with the provisions of WisDOT Standard Specifications for Highway and Structure Construction Section 405, 415, 416, 420 and 602 except as hereinafter modified.

602.2 Materials

Furnish linseed oil based liquid curing compound conforming to for White pigmented linseed = ASTM C309, type 2, class B or Clear linseed = ASTM C 309, Type 1, 10, class B.

Colored Concrete shall be in accordance with Section 501 of the WisDOT Specifications and as supplemented as follows:

Air content – 6%
Cement – 564 lbs; Type 1; no additives
Fine Aggregate – 1,475 lbs; SSD
Coarse Aggregate – 1,800 lbs; SSD
Color – #9 Red at 7% of the total cementitious materials from Dynamic Color Solutions or similar
Surface Sealer – Luster Coat, "gloss" appearance

The coloring agent shall be integrated throughout the mix to provide a consistent full-depth color in accordance with the manufacturer's recommendation.

The bonding agent shall be acrylic or styrene butadiene, subject to compliance with requirements provided by the color hardener manufacturer.

Imprinting tools shall be high quality resilient mats reproduced from castings of natural materials and providing uniform control of joint depth.

602.3 Construction Methods

All joints shall be filled and sealed with an approved joint sealer.

All inlets shall be placed concurrently with the paving operations. Box-outs will not be allowed.

Doweled expansion joints shall be placed at the end of radius or within 10' of the end of radius at all concrete side-road intersections, at bridge abutments, and where the new mainline pavement meets into the existing pavement (or at first joint into new pavement), or as specified in the plans.

The items of work described as “Reconstruct X” Concrete Pavement shall include the removal of old pavement, excavation, foundation preparation, any required saw cutting, dowel bars, and placement of the specified depth of concrete pavement as well as finishing and curing the new concrete.

All colored concrete and all colored and stamped concrete shall meet the color and texture as specified in the plans.

All finished concrete placed under this contract shall be stamped with the name of the Contractor and the year it is placed. All concrete base shall be marked with the date poured and the Engineer shall be notified of its location the following work day. Do not stamp concrete in any City owned Park.

A. General

Inlets shall be placed concurrently with the paving of the concrete pavement with #4 rebar located in the new pavement approximately 9” from the inside corners of the inlet, at a 45° angle to the corner of the inlet on the side of the inlet where a contraction joint is not placed.

Doweled expansion joints shall be a ¾” wide pre-formed doweled expansion joint with filler conforming to section 415.2.3 of the WisDOT Specifications.

All concrete shall have applied curing compounds of linseed-oil emulsions for curing and protection of concrete surfaces after surface water sheen has disappeared from the fresh concrete. The curing compounds shall be applied with approved equipment at the rate of 200 square feet per gallon of emulsion or at a rate designated by the Engineer. From April 15th to September 30th, inclusive, use white-pigmented linseed oil emulsions. At all other times, used non-pigmented (clear) linseed oil emulsions. For concrete placed after September 30th, apply linseed oil at a rate of 100 square feet per gallon. Linseed oil surface treatment will be considered incidental to the cost of the appropriate bid items.

Apply curing compound homogeneously to provide a uniform solid white opaque-coverage on all exposed concrete surfaces, equal to a white sheet of typing paper.

The Contractor may use 24” curb and gutter per City Standards in lieu of integral curb and gutter at intersections with the approval of the Engineer.

For concrete pavement greater than 6-inches in depth, all ‘tooled-in’ joints shall be sawed after the concrete has set.

The Contractor shall provide a minimum of one concrete finisher to remain on the project site after final finishing of all concrete surfaces and until such time as the concrete has hardened sufficiently to resists scarring caused by footprints, handprints, or any other type of imprint, malicious, or otherwise. The finisher shall actively and continuously patrol on foot the newly placed concrete and repair any damage to the surface that might be sustained as described above.

The cost for providing the finisher(s), the necessary equipment, and materials shall be incidental to the concrete pavement items.

B. Colored Concrete & Colored & Stamped Concrete

Prior to the installation of Color & Stamped Concrete, the Contractor shall provide a 4' x 4' mock-up at the job site or an alternate site within 5 miles of the job site. The Engineer shall approve the color, texture, and workmanship of the mock-up, then retain the mock-up as a standard for judging completed work.

Concrete Crack Repair

Section 415.3.17 of the WisDOT Specifications is deleted. The City will inspect the concrete pavement throughout the project, at final project inspection, and at the one-year guarantee date. The City will determine what cracks need repair and the type of repair needed. The Contractor shall repair the cracked concrete as the City directs.

602.4 Measurement and Payment

Joint Sealer will be considered incidental to the cost of the appropriate concrete pavement bid item.

Inlet setting and rebar insertion for inlets shall be incidental to the placement of concrete pavement.

Doweled expansion joints will be measured for work completed and in place by the linear foot transversely across the pavement from back of curb to back of curb.

Integral curb and gutter will be measured as part of the concrete pavement. The concrete pavement will be measured from back of curb to back of curb.

Linseed oil protection will be considered incidental to the cost of concrete pavement.

The items of work described as Reconstruct "X" Concrete Pavement will be measured by the square yard of the new concrete pavement completed and placed.

Section 415.5.3 of the WisDOT Specifications is deleted. The Contractor is fully responsible for any crack repairs that occur within the one-year guarantee.

The City will pay for measured quantities at the contract unit price under the following bid items:

ITEM #	DESCRIPTION	UNIT
602.01	8" Concrete Pavement	SY
602.02	9" Concrete Pavement	SY
602.03	10" Concrete Pavement	SY
602.04	8" Concrete Pavement HES	SY
602.05	9" Concrete Pavement HES	SY
602.06	10"Concrete Pavement HES	SY

602.07	8” Concrete Pavement SHES	SY
602.08	9” Concrete Pavement SHES	SY
602.09	10”Concrete Pavement SHES	SY
602.10	8” Integral Concrete Pavement	SY
602.11	9” Integral Concrete Pavement	SY
602.12	10” Integral Concrete Pavement	SY
602.13	8” Integral Concrete Pavement HES	SY
602.14	9” Integral Concrete Pavement HES	SY
602.15	10” Integral Concrete Pavement HES	SY
602.16	8" Integral Concrete Pavement SHES	SY
602.17	9" Integral Concrete Pavement SHES	SY
602.18	10" Integral Concrete Pavement SHES	SY
602.19	Concrete Pavement Approach Slab	SY
602.20	Concrete Pavement Approach Slab HES	SY
602.21	6" Concrete Driveway	SY
602.22	8" Concrete Driveway	SY
602.23	6" Concrete Driveway HES	SY
602.24	8" Concrete Driveway HES	SY
602.25	Pavement Ties	EACH
602.26	Pavement Dowel Bars	EACH
602.27	Drilled Tie Bars	EACH
602.28	Drilled Dowel Bars	EACH
602.29	Pavement Gaps	EACH
602.30	Continuous Diamond Grinding	SY
602.31	Doweled Expansion Joints	LF
602.32	Reconstruct 6" Concrete Pavement	SY
602.33	Reconstruct 8" Concrete Pavement	SY
602.34	Reconstruct 9" Concrete Pavement	SY
602.35	Reconstruct 6" Concrete Pavement HES	SY
602.36	Reconstruct 8" Concrete Pavement HES	SY
602.37	Reconstruct 9" Concrete Pavement HES	SY
602.38	Reconstruct 8" Concrete Pavement SHES	SY
602.39	Reconstruct 9" Concrete Pavement SHES	SY
602.40	Reconstruct 6" Integral Concrete Pavement	SY
602.41	Reconstruct 8" Integral Concrete Pavement	SY
602.42	Reconstruct 9" Integral Concrete Pavement	SY
602.43	Reconstruct 6" Integral Concrete Pavement HES	SY
602.44	Reconstruct 8" Integral Concrete Pavement HES	SY
602.45	Reconstruct 9" Integral Concrete Pavement HES	SY
602.46	Reconstruct 6" Integral Concrete Pavement SHES	SY
602.47	Reconstruct 8" Integral Concrete Pavement SHES	SY
602.48	Reconstruct 9" Integral Concrete Pavement SHES	SY
602.49	Concrete Corrugated Median	SF
602.50	Concrete Median Nose	SF
602.51	Traffic Island	SF
602.52	Colored Concrete 4"	SF
602.53	Colored Concrete 5"	SF
602.54	Colored Concrete 6"	SF

602.55	Colored Concrete 8"	SF
602.56	Colored Concrete 9"	SF
602.57	Colored Concrete 10"	SF
602.58	Colored & Stamped Concrete 4"	SF
602.59	Colored & Stamped Concrete 5"	SF
602.60	Colored & Stamped Concrete 6"	SF
602.61	Reconstruct Colored Concrete 4"	SF
602.62	Reconstruct Colored Concrete 5"	SF
602.63	Reconstruct Colored Concrete 6"	SF
602.64	Reconstruct Colored Concrete 8"	SF
602.65	Reconstruct Colored Concrete 9"	SF
602.66	Reconstruct Colored Concrete 10"	SF
602.67	Reconstruct Colored & Stamped Concrete 4"	SF
602.68	Reconstruct Colored & Stamped Concrete 5"	SF
602.69	Reconstruct Colored & Stamped Concrete 6"	SF
602.70	Cold Weather Concrete Protection	SY

Page Intentionally Left Blank

SECTION 603

CURB AND GUTTER

603.1 General

Perform work in accordance with the provisions of WisDOT Standard Specifications for Highway and Structure Construction Section 416 & 601 except as hereinafter modified.

603.2 Materials

Vacant

603.3 Description

The items of work described as Reconstruct Curb and/or Gutter shall include the removal of old curb and/or gutter, excavation, dowel bar insertion, any required saw cutting, and placement of the new curb and/or gutter as specified as well as finishing and curing the new concrete.

All concrete shall have applied curing compounds of linseed-oil emulsions for curing and protection of concrete surfaces after surface water sheen has disappeared from the fresh concrete. The curing compounds shall be applied with approved equipment at the rate of 200 square feet per gallon of emulsion or at a rate designated by the Engineer. From April 15th to September 30th, inclusive, use white-pigmented linseed oil emulsions. At all other times, used non-pigmented (clear) linseed oil emulsions. For concrete placed after September 30th, apply linseed oil at a rate of 100 square feet per gallon. Linseed oil surface treatment will be considered incidental to the cost of the appropriate bid items.

Apply curing compound homogeneously to provide a uniform solid white opaque-coverage on all exposed concrete surfaces, equal to a white sheet of typing paper.

All finished concrete placed under this contract shall be stamped with the name of the Contractor and the year it is placed. All concrete base shall be marked with the date poured and the Engineer shall be notified of its location the following work day. Do not stamp concrete in any City owned Park.

603.4 Measurement and Payment

The items of work described, as Reconstruct Curb and/or Gutter will be measured by the linear foot of the new curb and/or gutter completed and placed.

The City will pay for measured quantities at the contract unit price under the following bid items:

ITEM #	DESCRIPTION	UNIT
603.01	Curb & Gutter 18”	LF
603.02	Curb & Gutter 24”	LF
603.03	Curb & Gutter 30”	LF
603.04	Mountable Median Curb 18”	LF

603.05	Reconstruct Curb & Gutter 24”	LF
603.06	Reconstruct Curb & Gutter 30”	LF
603.07	Reconstruct Curb	LF
603.08	Concrete Surface Drain	EACH

SECTION 604

CONCRETE SIDEWALK AND DRIVEWAYS

604.1 General

Perform work in accordance with the provisions of WisDOT Standard Specifications for Highway and Structure Construction Section 602 except as hereinafter modified.

604.2 Materials

Vacant

604.3 Construction Methods

All "X" Concrete Sidewalk and Driveway" and "Reconstruct X" Concrete Sidewalk & Driveway" items, other than pedestrian curb ramps, shall have 6-inches of CABC ¾" or CABC 1 ¼" placed as leveling course beneath the sidewalk. All other concrete sidewalk items, including pedestrian curb ramps, shall have 4-inches of CABC ¾" or CABC 1 ¼" placed as leveling course beneath the sidewalk.

The items of work described as "Reconstruct X" Concrete Sidewalk shall include the removal of old sidewalk, excavation, foundation preparation, any required saw cutting, and placement of the specified depth of concrete sidewalk as well as finishing and curing the new concrete.

All concrete shall have applied curing compounds of linseed-oil emulsions for curing and protection of concrete surfaces after surface water sheen has disappeared from the fresh concrete. The curing compounds shall be applied with approved equipment at the rate of 200 square feet per gallon of emulsion or at a rate designated by the Engineer. From April 15th to September 30th, inclusive, use white-pigmented linseed oil emulsions. At all other times, used non-pigmented (clear) linseed oil emulsions. For concrete placed after September 30th, apply linseed oil at a rate of 100 square feet per gallon. Linseed oil surface treatment will be considered incidental to the cost of the appropriate bid items.

Apply curing compound homogeneously to provide a uniform solid white opaque-coverage on all exposed concrete surfaces, equal to a white sheet of typing paper.

Concrete sidewalk shall be jointed as shown on plans or as directed by the Engineer.

Curb ramps in residential areas shall be 6" in depth minimum. Curb ramps in commercial or industrial areas shall be 8" in depth minimum. Curb ramp areas will be paid under the appropriate Concrete Sidewalk and Driveway bid items unless otherwise specified in the contract.

Sidewalk through a commercial driveway shall be 8” in depth minimum. Sidewalk through a residential driveway shall be 6” in depth minimum. Sidewalk poured through a driveway shall be paid under the appropriate driveway bid items unless otherwise specified in the contract.

Sidewalk curb retaining wall >9” (also referred to as sidewalk retaining wall) and sidewalk curb retaining wall 6” (also referred to as sidewalk curb or sidewalk with integral curb) shall be installed as directed by the Engineer and in accordance with the detail and the plans. Sidewalk retaining wall and sidewalk curb shall include sawing and removing curb, drilling and placing rebar per the details, forming, placing, finishing, and curing concrete. Sidewalk retaining wall and sidewalk curb shall be installed integral with the sidewalk.

Welded wire mesh reinforcement (4” x 4”) to only be used during replacement of driveway aprons with existing reinforcement.

All finished concrete placed under this contract shall be stamped with the name of the Contractor and the year it is placed. All concrete base shall be marked with the date poured and the Engineer shall be notified of its location the following work day. Do not stamp concrete in any City owned Park.

604.4 Measurement and Payment

The items of work described as “Reconstruct X” Concrete Sidewalk will be measured by the square foot of the new concrete sidewalk completed and placed.

When sidewalk curb is poured integrally with the sidewalk, the sidewalk curb shall not be included in the measured quantity of sidewalk. All concrete sidewalk items will be paid separately under the appropriate bid items, measured from the face of the sidewalk curb or sidewalk retaining wall. The City will measure the item Sidewalk Curb in length by the linear foot acceptably completed. The City will measure the item Sidewalk Retaining Wall by the square foot measured on the front face of the sidewalk retaining wall.

The City will pay for measured quantities at the contract unit price under the following bid items:

ITEM #	DESCRIPTION	UNIT
604.01	4” Concrete Sidewalk	SF
604.02	5” Concrete Sidewalk	SF
604.03	6” Concrete Sidewalk and Driveway	SF
604.04	8” Concrete Sidewalk and Driveway	SF
604.05	6” Concrete Sidewalk and Driveway HES	SF
604.06	8” Concrete Sidewalk and Driveway HES	SF
604.07	Reconstruct 4” Concrete Sidewalk > 150 SF per block	SF
604.08	Reconstruct 4” Concrete Sidewalk < 150 SF per block	SF
604.09	Reconstruct 5” Concrete Sidewalk > 150 SF per block	SF
604.10	Reconstruct 5” Concrete Sidewalk < 150 SF per block	SF
604.11	Reconstruct 6” Concrete Sidewalk & Driveway	SF
604.12	Reconstruct 8” Concrete Sidewalk & Driveway	SF
604.13	Reconstruct 6” Concrete Sidewalk & Driveway HES	SF
604.14	Reconstruct 8” Concrete Sidewalk & Driveway HES	SF
604.15	Concrete Steps	SF

604.16	Sidewalk Curb Retaining Wall 6”	LF
604.17	Sidewalk Curb Retaining Wall > 9”	SF
604.18	4” X 4” Welded Wire Mesh Reinforcement	SF

Page Intentionally Left Blank

SECTION 605

MUDJACKING

605.1 Description

The work under this item shall consist of raising concrete curb and gutter, pavement, or sidewalk by injecting a Portland cement grout mix under the slab or curb and gutter at locations designated by the contract, or as directed by the Engineer.

605.2 Materials

Provide material consisting of: 1 part (by volume) Portland cement Type I or II and 3 parts (by volume) of sand and water to achieve required fluidity. Provide sand meeting the requirements of 501.2.5 of the WisDOT Specifications. A cellular concrete grout alternative as approved by the Engineer may be used. The materials shall meet the following requirements as a minimum:

Cement	ASTM C150	Type I,II
Density	ASTM C-495	50 pcf max
Compressive Strength	ASTM C-495	300 psi @ 28 day min 100 psi in 24 hours
Shrinkage	ASTM	1% by volume
Flow	ASTM C-939	35 sec max

605.3 Construction Methods

Holes for injecting grout mix shall be spaced not less than 12 inches, but not more than 18 inches from a transverse joint or crack.

605.4 Measurement and Payment

The City will pay for mudjacking at the contract unit price of successfully mudjacked curb and gutter, pavement, sidewalk, and driveway aprons under the following bid items:

ITEM #	DESCRIPTION	UNIT
605.01	Mudjacking Curb & Gutter	LF
605.02	Mudjacking Pavement	SY
605.03	Mudjacking Sidewalk	SF
605.04	Mudjacking Driveway Aprons	SY

Page Intentionally Left Blank

SECTION 606

VACANT

Page Intentionally Left Blank

SECTION 607

JOINT AND CRACK SEALING

607.1 Description

This work consists of sawing joints, routing cracks, cleaning joints and cracks in asphaltic pavement and concrete pavements, and then sealing these prepared joints and cracks with an approved sealing material.

607.2 Materials

The material shall be an elastic type, hot pour sealer. The joint sealer shall be a material meeting the requirements of ASTM D6690 Type IV, (Crafco Road Saver 231 or equal). Backer rod used in conjunction with this sealer must withstand, without damage, the high temperatures inherent to the sealer. The vendor shall supply a complete statement of the origin of the material to the Engineer along with recommendations of the manufacturer including pouring temperature and maximum safe heating temperature, before or at the preconstruction meeting.

607.3 Construction Methods

A. Equipment

Sawing and routing equipment shall be capable of cutting joints and cracks to the required dimension, following random cracks with accurate depth control. Excessive spalling of the surface will not be permitted. Air compressors shall be of sufficient size to maintain minimum air pressure of 120 psi and provide moisture and oil free compressed air. Sand blast equipment used shall be capable of removing existing sealant, saw slurry, or other foreign material from the vertical face of the joint or crack to the specified depth. Equipment for heating and placing hot pour sealant shall be oil-jacketed, double-boiler type heating kettle equipped with both agitation and recirculation systems capable of heating the material to 410° F and pumping the material into the prepared cracks or joints with a wand applicator.

B. Crack & Joint Preparation

Joints shall be sawn and cracks routed to provide a minimum sealant reservoir of ¾-inch by a nominal ¾-inch depth. All foreign material resulting from crack and joint preparation shall be removed from the roadway, approaches, sidewalks, and terrace areas by brooming, mechanical sweeping, or other methods to the satisfaction of the Engineer. On concrete pavement, just prior to sealing joints and cracks, the sealant reservoir shall be sand blasted to the proposed depth of the reservoir leaving a clean, dry, newly exposed concrete surface on the vertical edges, the angle of approach of the sand blast nozzle to the vertical faces of the reservoir shall be approximately 30 degrees. The reservoir shall then be blown out with oil free compressed air at a minimum pressure of 120 psi. A backer rod may be inserted into the sealant reservoir to form the proper depth for the sealant.

C. Application

On concrete pavement, the sealant shall be pumped into the dry, prepared reservoir to a depth flush to 1/8-inch below the surface of the pavement by "tip sealing" without using a squeegee.

On asphaltic pavement, all cleaned cracks and joints shall be treated with a high capacity heat lance. The entire crack reservoir shall be pressure filled with a wand, bander, or squeegee. The overband shall not exceed 1/8-inch above the adjacent pavement, nor exceed a width of 3-inches. Where sealant has settled into the reservoir more than 1/8-inch below adjacent pavement, additional filling will be necessary. Lanes may be opened to traffic only after the sealer has set sufficiently so it will not pick up under traffic. Biodegradable paper may be applied to the sealant, but only after the sealant surface has set as to avoid penetration of the liquid or paper into the sealant. In the event that excess sealing compound overflows onto surfaces adjoining cracks or joints, it shall be the Contractor's responsibility to remove the excess compound to the satisfaction of the Engineer.

The Contractor shall take all necessary precautions to prevent the tracking of joint sealing compound onto adjoining surfaces.

D. Guarantee of Work

The Contractor shall guarantee that the joints and cracks sealed shall remain sealed through the following three (3) winters. The Contractor shall return to the project site and repair sealed joints and cracks, which have lost their sealant bond at no additional cost to the City. Failed sealed joints and cracks will be identified by the City.

607.4 Measurement and Payment

The length of transverse joints and cracks will be computed from a count of these cracks and the nominal pavement width. Joints and cracks parallel to the centerline will be computed as a straight line from the beginning to the end of the joint.

Sawing, routing, and sealing will be paid at the unit price per linear foot. Payment shall be full compensation for all labor, equipment, materials, and incidentals required for sawing, routing, cleaning, and placing of the sealant. The City will pay for measured quantities at the contract unit price under the following bid items:

ITEM #	DESCRIPTION	UNIT
607.01	Joint & Crack Sealing	LF

SECTION 608

ASPHALTIC PAVEMENT

608.1 General

Perform work in accordance with the provisions of WisDOT Standard Specifications for Highway and Structure Construction Section 450, 455, 460, 465 and 475 except as hereinafter modified.

608.2 Materials

Vacant

608.3 Construction Methods

When the asphaltic material is to be placed on an existing asphalt or concrete pavement, not including concrete base, the existing pavement shall be swept and the contractor shall place tack coat material prior to paving operations commencing. The tack coat and street sweeping will be considered incidental to the project. In all other locations, placement of subsequent layers of asphalt shall be completed within 24 hours, unless approved by the Engineer; no tack coat is required, unless ordered by the Engineer. The Contractor shall be responsible to control means and methods to eliminate the need for tack coat between asphalt layers.

Section 460.2.8.3 of the WisDOT Specifications is hereby deleted. The City reserves the right to perform testing as deemed necessary by the Engineer.

Sections 460.3.3.2 of the WisDOT Specifications is hereby modified as follows:

The City reserves the right to perform pavement density testing as deemed necessary by the Engineer. The Engineer will determine the target maximum density. The Contractor will be notified of the results if the minimum required densities are not met, or if the Contractor requests the results.

Do not re-roll compacted mixtures with deficient density test results. Do not operate continuously below the specified minimum density. Stop production, identify the source of the problem, and make corrections to produce work meeting the specification requirements.

Sections 460.3.3.3 of the WisDOT Specifications is hereby modified as follows:

The City reserves the right to waive pavement density testing

608.4 Measurement and Payment

Quality management shall be considered incidental to the Hot Mix Asphalt (HMA) Pavement bid items and will not be measured separately.

The City will pay for the HMA Pavement bid items at the contract unit price subject to one or more of the following adjustments:

A. Disincentive for density of HMA pavement as specified in Section 460.5.2.2 of the WisDOT Specifications.
B. Reduced payment for nonconforming smoothness as specified in Section 450.3.2.9 of the WisDOT Specifications.
C. Reduced payment for nonconforming QMP HMA mixtures as specified in Section 460.2.8.2.1.7 of the WisDOT Specifications.

Section 460.5.2.3 of the WisDOT Specifications is hereby deleted.

Salvaged Asphaltic Pavement Milling shall be full compensation for milling the pavement at the specified depth or as directed by the Engineer, sweeping and cleanup of all loose material, and hauling and stockpiling of the asphaltic material to a designated location.

Asphaltic milling shall be full compensation for milling the pavement at the specified depth or as directed by the Engineer, sweeping and cleanup of all loose material, and disposing of the asphaltic material.

The City will pay for measured quantities at the contract unit price under the following bid items:

ITEM #	DESCRIPTION	UNIT
608.01	HMA Pavement Type 3LT 58-28S	TON
608.02	HMA Pavement Type 4LT 58-28S	TON
608.03	HMA Pavement Type 4LT 58-28 S	SY
608.04	HMA Pavement Type 5LT 58-28 S	TON
608.05	HMA Pavement 4LT 58-28 S, Patching	TON
608.06	HMA Pavement 4LT 58-28 S, Patching (Areas < 20 Tons per block & RR Crossings)	TON
608.07	HMA Pavement 4LT 58-28 S, Patching (Areas = or > 20 Tons per block)	TON
608.08	Tack Coat	GAL
608.09	Asphaltic Surface Patching	TON
608.10	Asphaltic Surface Patching Milling	SY
608.11	Asphaltic Surface Temporary	TON
608.12	Asphaltic Curb	LF
608.13	Asphaltic Flumes	SY
608.14	Seal Coat	TON
608.15	Salvaged Asphaltic Pavement	SY
608.16	Salvaged Asphaltic Pavement Milling	SY
608.17	Asphaltic Milling	SY
608.18	HMA Cold Weather Paving	TON

SECTION 609

VACANT

Page Intentionally Left Blank

SECTION 610

ROADSIDE BARRIERS

610.1 General

Perform work in accordance with the provisions of WisDOT Standard Specifications for Highway and Structure Construction Section 603 and 614 except as hereinafter modified.

610.2 Materials

Vacant

610.3 Construction Methods

Vacant

610.4 Measurement and Payment

Payment for Temporary Concrete Barrier is full compensation for providing barrier, initial delivery, trucking between worksites, and removing after contract completion.

The City will pay for measured quantities at the contract unit price under the following bid items:

ITEM #	DESCRIPTION	UNIT
610.01	Temporary Concrete Barrier	LF
610.02	Steel Plate Beam Guard Class A	LF
610.03	Steel Plate Beam Guard Class B	LF
610.04	Type 2 End Treatment	EACH
610.05	Energy Absorbing Terminal	EACH
610.06	Steel Thrie Beam Structure Approach	LF
610.07	Salvaging Beam Guard	LF

Page Intentionally Left Blank

SECTION 611

DETECTABLE WARNING FIELDS

611.1 Description

Perform work in accordance with the provisions of WisDOT Standard Specifications for Highway and Structure Construction Section 602 except as hereinafter modified.

611.2 Materials

Furnish curb ramp detectable warning field from Neenah Foundry Company (Neenah Detectable Warning Plate – Cast Iron) in a natural patina finish or an approved equal.

611.3 Construction Methods

Vacant

611.4 Measurement and Payment

The City will measure Detectable Warning Field in place by the square feet of surface area acceptably completed and according to 602.4 of the WisDOT Specifications.

Payment for Detectable Warning Field is full compensation for requirements specified in 602.5 of the WisDOT Specifications. Payment for any concrete sidewalk bid items directly below detectable warning field is not included in payment for Detectable Warning Field in curb ramp.

The City will pay for measured quantities at the contract unit price under the following bid items:

ITEM #	DESCRIPTION	UNIT
611.03	Curb Ramp Detectable Warning Field	SF

Page Intentionally Left Blank

SECTION 612

GEOTEXTILE FABRICS & GEOGRID

612.1 General

Perform work in accordance with the provisions of WisDOT Standard Specifications for Highway and Structure Construction Section 645 except as hereinafter modified.

612.2 Materials

Vacant

612.3 Construction

Vacant

612.4 Measurement and Payment

The City will pay for the square yard of surface area placed and accepted at the contract unit price under the following bid items:

ITEM #	DESCRIPTION	UNIT
612.01	Geotextile Fabric Type SAS	SY
612.02	Geotextile Fabric Type MS	SY
612.03	Geotextile Fabric Type DF	SY
612.04	Geotextile Fabric Type SR	SY
612.05	Geotextile Fabric Type R	SY
612.06	Geotextile Fabric Type HR	SY
612.07	Geotextile Fabric Type C	SY
612.08	Geotextile Fabric Type ES	SY
612.09	Geogrid Type SR	SY
612.10	Geogrid Type MR	SY
612.11	Geogrid Type SSR	SY

Page Intentionally Left Blank

SECTION 613

SAWING PAVEMENT

613.1 General

Perform work in accordance with the provisions of WisDOT Standard Specifications for Highway and Structure Construction Section 690 except as hereinafter modified.

613.2 Materials

Vacant

613.3 Construction Methods

Vacant

613.4 Measurement and Payment

The item Sawing Pavement Full Depth includes sawing both asphalt and concrete pavement full depth.

The City will pay for measured quantities at the contract unit price under the following bid items:

ITEM #	DESCRIPTION	UNIT
613.01	Sawing Asphaltic Pavement	LF
613.02	Sawing Concrete Pavement Full Depth	LF
613.03	Sawing Pavement Full Depth	LF

Page Intentionally Left Blank

DIVISION 7

STREET LIGHTING & TRAFFIC SIGNALS

SECTION 701

ELECTRICAL CONDUIT

701.1 General

Perform work in accordance with the provisions of WisDOT Standard Specifications for Highway and Structure Construction Section 651 and 652 except as hereinafter modified.

701.2 Materials

All rigid nonmetallic conduits shall be Schedule 40 PVC conforming to UL 651. Schedule 40 HDPE conforming to UL 651A may be used in lieu of Schedule 40 PVC for conduits to be installed by directional drilling.

701.3 Construction Methods

Natural backfill may be used in trenches and excavations which are not within 5' of or under pavement, driveways and sidewalks.

Trenches under pavement, driveways and sidewalks shall have approved sand backfill placed in 6" layers over the conduit. The remainder of the trench shall be filled with ¾" Crushed Aggregate Base Course in 6" layers. Backfill material shall be mechanically compacted to a minimum of 95% of modified proctor. Trench backfill is considered incidental to the item of conduit.

All conduits shall be directionally bored where practicable, to minimize disturbances to existing pavement, curb and gutter, and sidewalk.

701.4 Measurement and Payment

Schedule 40 HDPE installed in lieu of Schedule 40 PVC shall be paid for under the same respective bid item as the Schedule 40 PVC conduit, "Conduit Non-Metallic Schedule 40 'x' inch"."

The City will pay for measured quantities at the contract unit price under the following bid item:

ITEM #	DESCRIPTION	UNIT
701.01	Conduit Non Metallic Schedule 40 ¾-Inch	LF
701.02	Conduit Non Metallic Schedule 40 1-Inch	LF
701.03	Conduit Non Metallic Schedule 40 1¼-Inch	LF
701.04	Conduit Non Metallic Schedule 40 1½-Inch	LF
701.05	Conduit Non Metallic Schedule 40 2-Inch	LF
701.06	Conduit Non Metallic Schedule 40 2½-Inch	LF
701.07	Conduit Non Metallic Schedule 40 3-Inch	LF
701.08	Conduit Non Metallic Schedule 40 3-Inch Dual	LF
701.09	Conduit Non Metallic Schedule 40 4-Inch	LF
701.10	Loop Detector Conduit	LF
701.11	Loop Detector Slots	LF

Page Intentionally Left Blank

SECTION 702

PULL BOXES AND JUNCTION BOXES

702.1 General

Perform work in accordance with the provisions of WisDOT Standard Specifications for Highway and Structure Construction Section 651 and 653 except as hereinafter modified.

702.2 Materials

MODEL #	SIZE (INCH)	MATERIAL	SIDEWALLS	NAME PLATE
Newbasis PCA111818-00006	11x18x18	Polymer Concrete	Straight	TRAFFIC
Newbasis FCA132418T-00006	13x24x18	Fiberglass	Tapered	TRAFFIC
Newbasis FCA173034T-00006	17x30x34	Fiberglass	Tapered	FIBER OPTIC
Newbasis FCA173034T-00006	17x30x34	Fiberglass	Tapered	LIGHTING
Newbasis FCA173034T-00006	17x30x34	Fiberglass	Tapered	TRAFFIC
Newbasis FCA243636T-00006	24x36x36	Fiberglass	Tapered	TRAFFIC
Newbasis PCA173024-00006	17x30x24	Polymer Concrete	Straight	TRAFFIC

Aggregate placed under pull box shall conform to WisDOT No. 2 Course Aggregate in Section 501.

702.3 Construction Methods

Vacant

702.4 Measurement and Payment

The City will pay for measured quantities at the contract unit price under the following bid items:

ITEM #	DESCRIPTION	UNIT
702.01	Pull Box 11x18x18-Inch Polymer Concrete Top & Sidewalls Furnish & Install	EACH
702.02	Pull Box 11x18x18-Inch Polymer Concrete Top & Sidewalls Install Only	EACH
702.03	Pull Box 13x24x18-Inch Polymer Concrete Top Fiberglass Sidewalls Furnish & Install	EACH
702.04	Pull Box 13x24-Inch x 18-Inch Polymer Concrete Top Fiberglass Sidewalls Install Only	EACH
702.05	Pull Box 17x30-Inch x 34-Inch Polymer Concrete Top Fiberglass Sidewalls Furnish & Install	EACH
702.06	Pull Box 17x30-Inch x 34-Inch Polymer Concrete Top Fiberglass Sidewalls Install Only	EACH
702.07	Pull Box 17x30-Inch x 24-Inch Polymer Concrete Top & Sidewalls Furnish & Install	EACH
702.08	Pull Box 17x30-Inch x 24-Inch Polymer Concrete Top & Sidewalls Install Only	EACH
702.09	Pull Box 24x36-Inch x 36-Inch Polymer Concrete Top Fiberglass Sidewalls Furnish & Install	EACH
702.10	Pull Box 24x36-Inch x 36-Inch Polymer Concrete Top Fiberglass Sidewalls Inch Only	EACH
702.11	Removing Pull Boxes	EACH

SECTION 703

CONCRETE BASES

703.1 General

Perform work in accordance with the provisions of WisDOT Standard Specifications for Highway and Structure Construction Section 651 and 654 except as hereinafter modified.

703.2 Materials

The City will furnish anchor bolts for Concrete Bases, Type 2, Type 3, Type 4, and Type 5 bases only when the City procures Type 2, Type 3, Type 4, and Type 5 poles for the project. All other anchor bolts shall be furnished by the Contractor.

Concrete bases shall be Type A concrete.

Provide Nordic Fiberglass, Inc Model GST-44-26-24-GR-20x12 or approved equal for Traffic Control Ground Sleeve.

703.3 Construction Methods

Concrete bases shall be constructed in conformance the detail drawings contained in the plan.

Bases shall be excavated by use of a circular auger.

Form depth shall be no more than six (6) inches below grade on the lower side of the base. Forming shall be removed after concrete has set. If a base requires a deep form because of loose dirt or fill, the form shall be removed before backfilling around the base. Backfill shall be tamped tight against the bare concrete base in layers of one (1) foot or less.

Conduit exiting the base shall be terminated 18 inches from the outside edge of the base unless specified otherwise. The final or terminating concrete base in a conduit run shall have an 18 inch exit stub installed for future cabling use. The exit stub shall be sized as used throughout the conduit run as shown at the entrance of the base. Ends of conduit installed below grade for future use shall be capped if metallic or plugged if nonmetallic.

Minimum bending radius of the conduit is equal to six (6) times the diameter.

All conduit ends at the top of the concrete bases shall be plugged immediately after placement, and before concrete is poured.

The minimum depth of conduit exiting the concrete base and installed below the traveled way shall be 24 inches. The minimum depth of conduit exiting the concrete base that is not installed below the traveled way shall be 18 inches. The maximum depth of all conduit shall be 36 inches except with written approval by the Engineer.

Anchor rods shall be installed with misalignments of less than 1:40 from vertical.

Top surfaces of concrete bases shall be trowel finished smooth and level.

Bell ends shall be installed on all PVC conduit exposed at the top of concrete bases before installation of cable or wire.

A NO. 4 AWG, stranded copper equipment grounding conductor shall be exothermically welded to the Grounding Rod for Type 2, Type 3, Type 4, and Type 5 bases. The equipment grounding conductor shall be furnished and installed to enter the base, through a 3/4 inch conduit installed for grounding purposes, leaving a four (4) foot coil of wire above the concrete base. The equipment grounding conductor shall be neatly coiled and the coils tied together.

Provide a surface finish as specified in 502.3.7.2 of the WisDOT Standard Specifications and the plan details.

All forming and reinforcement shall be inspected prior to the contractor pouring the concrete.

Cure exposed portions of the concrete base as specified in concrete pavement section.

703.4 Measurement and Payment

The City will pay for measured quantities at the contract unit price under the following bid items:

ITEM #	DESCRIPTION	UNIT
703.01	T-1 Base	EACH
703.02	T-2 Base	EACH
703.03	T-3 Base	EACH
703.04	T-4 Base	EACH
703.05	T-5 Base	EACH
703.06	Deco Base	EACH
703.07	Removing T-1 Base	EACH
703.08	Removing T-2 Base	EACH
703.09	Removing T-3 Base	EACH
703.10	Removing T-4 Base	EACH
703.11	Removing T-5 Base	EACH
703.12	Removing Deco Base	EACH
703.13	Traffic Signal Ground Sleeve	EACH

SECTION 704

ELECTRICAL WIRING

704.1 General

Perform work in accordance with the provisions of WisDOT Standard Specifications for Highway and Structure Construction Section 651 and 655 except as hereinafter modified.

This work shall consist of furnishing and installing conductors for traffic signals and lighting equipment in accordance with the requirements of the plans, specifications and contract.

704.2 Materials

Power distribution lines required to energize street lighting equipment or traffic signals pertaining to this work shall each consist of 2, 3 or 4 copper conductors (depending on the electrical service requirements). Aluminum conductors shall not be used except where specified in the plans, specifications and contract. All conductors shall be rated for 600 volts.

THWN wire shall be used in all circumstances as a minimum. XHHW/XLPE conductors shall be used if required by the plans, specifications and contract. Conductor insulation shall be color coded throughout the system. All neutral conductor insulation shall be white in color and primary conductor insulation shall be black or red in color.

704.3 Construction Methods

Splices and taps into new or existing circuits shall be considered incidental to the contract. All materials used to properly complete splices and taps shall also be considered incidental to the contract.

All splices and taps shall be accomplished with #2-#14 waterproof connectors as manufactured RAYCHEM/TYCO or equal. Waterproof connectors shall have one port for each wire to be spliced. Two or more wires in a single port is not acceptable.

Neutral taps and connections shall not be taped.

Splices and taps shall only be made in pull boxes, junction boxes or in bases of light or signal standards. Splices and taps made in pull boxes shall be fully waterproof connections.

Each circuit shall be marked in every pull box and junction box with an approved plastic tag identifying the circuit name or number. The circuit name or number shall coincide with that used at the circuit breaker panel or demark point.

704.4 Measurement and Payment.

The quantities of electrical wiring for the electrical wiring bid items will be measured from structure to structure, base to base, pull box to base, etc.; and will be paid for at the contract unit price per lineal foot.

The City will pay for measured quantities at the contract unit price under the following bid items:

ITEM #	DESCRIPTION	UNIT
704.01	Cable Traffic Signal 3-14 AWG	LF
704.02	Cable Traffic Signal 4-14 AWG	LF
704.03	Cable Traffic Signal 5-14 AWG	LF
704.04	Cable Traffic Signal 7-14 AWG	LF
704.05	Cable Traffic Signal 9-14 AWG	LF
704.06	Cable Traffic Signal 12-14 AWG	LF
704.07	Cable Traffic Signal 15-14 AWG	LF
704.08	Cable Traffic Signal 19-14 AWG	LF
704.09	Cable Traffic Signal 21-14 AWG	LF
704.10	Cable Type UF 2-12 AWG Grounded	LF
704.11	Cable Type UF 2-10 AWG Grounded	LF
704.12	Cable Type UF 2-8 AWG Grounded	LF
704.13	Electrical Wiring 14 AWG	LF
704.14	Electrical Wiring 12 AWG	LF
704.15	Electrical Wiring 10 AWG	LF
704.16	Electrical Wiring 8 AWG	LF
704.17	Electrical Wiring 6 AWG	LF
704.18	Electrical Wiring 4 AWG	LF
704.19	Loop Detector Lead in Cable	LF
704.20	Loop Detector Wire	LF
704.21	Traffic Signal EVP Detector Cable	LF

SECTION 705

ELECTRICAL SERVICE

705.1 General

Perform work in accordance with the provisions of WisDOT Standard Specifications for Highway and Structure Construction Section 651 and 656 except as hereinafter modified.

705.2 Materials

Electrical Service Meter Breaker Pedestal

Provide Meter pedestal, electric utility, 200a, 120/240v, 1-phase, with service disconnect provisions, Milbank NU8980-0-KK or approved equal

Street Light Underground Service

Provide Nordic Fiberglass, Inc Utility Roto-Cab Cabinet Model No. ND-362-442-MG-110-X-X in Mist Gray color. Trinetics MR-YCL, Part 33050200; 2-pole 120/240 V, Norm Open; Form A air contact, 100A; Load Protection: Circuit Breaker; Coil Voltage: 20C; Control Circuit Source: Line; HOA switch: Internal; Control Circuit arrestor: Spark Gap; weather proof case.

705.3 Construction Methods

Installation of the underground street light service shall be in accordance to the manufacturer's instructions and Wisconsin Public Service Corporation regulations.

705.4 Measurement and Payment

The City will pay for measured quantities at the contract unit price under the following bid items:

ITEM #	DESCRIPTION	UNIT
705.01	Electrical Service Meter Socket	EACH
705.02	Street Light Underground Service	EACH

Page Intentionally Left Blank

SECTION 706

POLES, ARMS, STANDARDS, AND BASES

706.1 General

Perform work in accordance with the provisions of WisDOT Standard Specifications for Highway and Structure Construction Section 651 and 657 except as hereinafter modified and The work shall include furnishing and installing monotube signal pole assembly equipment, and installation only of monotube traffic signal pole assembly equipment in accordance with the requirements of the plans, specifications, and contract.

706.2 Materials

All bases and poles are to be semi-gloss black finish (dipped).

The item materials and specifications are identical with the 10, 13, and 15 ft poles with the exception of its length of 4 ft for Traffic Signal Standards Aluminum 4 Feet.

Streetlight pole, 30-foot, shall be black semi-gloss finish, round tapered galvanized 7-gauge steel or fiberglass composite construction, with a 10-ft streetlight arm, see detail for single streetlight arm with traffic signals pole , include hardware except anchor bolt covers.

Pole, signal, 20-ft, shall be galvanized with semi-gloss black finish, round tapered steel, min 7-gauge wall thickness, with a 25-ft monotube traffic signal arm with a 3-ft rise mounted at 17-ft above base (see detail), removable metal top cap, 16-inch bolt circle, include hardware except anchor bolt covers.

Pole, signal, 30-ft, shall be galvanized with semi-gloss black finish, round tapered steel, min 7-gauge wall thickness, with a 25-ft monotube traffic signal arm with a 3-ft rise mounted at 17-ft above base (see detail), removable metal top cap, 15-ft luminaire/camera arm with a 2-ft rise mounted to butt-plate near top of pole, 16-inch bolt circle, include hardware except anchor bolt covers

Pole, signal, 30-ft, shall be galvanized with semi-gloss black finish, round tapered steel, min 7-gauge wall thickness, with a 40-ft monotube curved traffic signal arm mounted at 18-ft above base, (the monotube arm shall be suitable for mounting one 5-section and two 3-section signals (see detail)), removable metal top cap, 15-ft luminaire/camera arm with a 2-ft rise mounted to butt-plate near top of pole, 16.5-in bolt circle, include hardware except anchor bolt covers.

Pole, signal, 30-ft, shall be galvanized with semi-gloss black finish, round tapered steel, min 7-gauge wall thickness, with 50-ft monotube curved traffic signal arm mounted at 18-ft above base, (monotube arm suitable for mounting one 5-section and two 3-section signals (see detail)), removable metal top cap, 15-ft luminaire/camera arm with a 2-ft rise mounted to butt-plate near top of pole, 16.5-in bolt circle, include hardware except anchor bolt covers.

706.3 Construction Methods

Removing Traffic Signals

Unless otherwise indicated on the plans or directed by the Engineer, the Contractor shall completely remove traffic signal equipment, bases, and pull boxes marked for removal. The removal of all equipment, concrete bases, and pull boxes shall be paid for at the Contract unit price per each which price shall be full compensation for removing concrete, pull boxes, traffic signal equipment removing and salvaging and disposal or salvaging of surplus materials; and for all labor, tools, equipment and incidentals necessary to complete the work.

All abandoned/buried items encountered while excavating shall be removed and considered incidental to the removal bid item.

All above grade traffic signal equipment and materials noted on the plans to be removed shall be salvaged by the Contractor and delivered to the East Side Municipal Garage, Electric Shop, located at 1820 Mills Street. The Contractor shall be responsible for protecting all equipment and materials from damage during removal, salvaging, and delivery. This shall be considered incidental to the removal bid items.

High Strength Steel Anchor Rod Installation Tensioning Record is required for High-strength bolts and direction tension indicating (DTI) washers shall be used on the installation of all Poles Type 2, 3, 4, and 5 per procedures stipulated in WisDOT Standard Specifications for Highways and Structure Construction Section 657. Use form High Strength Steel Anchor Rod Installation Tension Record available on City website.

706.4 Measurement and Payment

The City will pay for measured quantities at the contract unit price under the following bid items:

ITEM #	DESCRIPTION	UNIT
706.01	Pedestal Bases	EACH
706.02	Transformer Bases	EACH
706.03	Traffic Signal Standards Aluminum 13 Feet	EACH
706.04	Traffic Signal Standards Aluminum 10 Feet	EACH
706.05	Traffic Signal Standards Aluminum 15 Feet	EACH
706.03	Traffic Signal Standards Aluminum 4 Feet	EACH
706.04	Traffic Signal Standards Aluminum 10 Feet	EACH
706.05	Traffic Signal Standards Aluminum 13 Feet	EACH
706.06	Traffic Signal Standards Aluminum 15 Feet	EACH
706.07	Pole Type 2 30 ft Black Single Side Mount 10 ft Streetlight Arm with Traffic Signals Furnish and Install	EACH
706.08	Pole Type 2 30 ft Black Single Side Mount 10 ft Streetlight Arm with Traffic Signals Install Only	EACH
706.09	Pole Type 3 30 ft Black Curved 25 ft Signal Arm 15 ft Camera Arm Furnish and Install	EACH
706.10	Pole Type 3 30 ft Black Curved 25 ft Signal Arm 15 ft Camera Arm Install Only	EACH

706.11	Pole Type 3 30 ft Black Curved 30 ft Signal Arm 15 ft Camera Arm Furnish and Install	EACH
706.12	Pole Type 3 30 ft Black Curved 30 ft Signal Arm 15 ft Camera Arm Install Only	EACH
706.13	Pole Type 3 20 ft Black Curved 25 ft Signal Arm Furnish and Install	EACH
706.14	Pole Type 3 20 ft Black Curved 25 ft Signal Arm Install Only	EACH
706.15	Pole Type 3 20 ft Black Curved 30 ft Signal Arm Furnish and Install	EACH
706.16	Pole Type 3 20 ft Black Curved 30 ft Signal Arm Install Only	EACH
706.17	Pole Type 3 20 ft Black Curved 35 ft Signal Arm Furnish and Install	EACH
706.18	Pole Type 3 20 ft Black Curved 35 ft Signal Arm Install Only	EACH
706.19	Pole Type 4 30 ft Black Curved 40 ft Signal Arm 15 ft Camera Arm Furnish and Install	EACH
706.20	Pole Type 4 30 ft Black Curved 40 ft Signal Arm 15 ft Camera Arm Install Only	EACH
706.21	Pole Type 4 30 ft Black Curved 45 ft Signal Arm 15 ft Camera Arm Furnish and Install	EACH
706.22	Pole Type 4 30 ft Black Curved 45 ft Signal Arm 15 ft Camera Arm Install Only	EACH
706.23	Pole Type 5 30 ft Black Curved 50 ft Signal Arm 15 ft Camera Arm Furnish and Install	EACH
706.24	Pole Type 5 30 ft Black Curved 50 ft Signal Arm 15 ft Camera Arm Install Only	EACH
706.25	Pole Type 5 30 ft Black Curved 55 ft Signal Arm 15 ft Camera Arm Furnish and Install	EACH
706.26	Pole Type 5 30 ft Black Curved 55 ft Signal Arm 15 ft Camera Arm Install Only	EACH
706.27	Removing Traffic Signals (Location)	EACH

Page Intentionally Left Blank

SECTION 707

TRAFFIC SIGNALS

707.1 General

Perform work in accordance with the provisions of WisDOT Standard Specifications for Highway and Structure Construction Section 651, 655, 658, 675, and 677 except as hereinafter modified.

707.2 Materials

Pedestrian Push Buttons shall be Polara Bulldog BDSP-011-Y, and Polara Bulldog Aluminum Push Button Cup (APBC-Y, yellow), or approved equal.

Traffic signal pre-emption system
Traffic signal pre-emption system, GTT OPTICOM GPS SYSTEM for TS2 traffic signal control cabinet, to include MODEL 760 card rack, MODEL 764 discriminator module, MODEL 3100 GPS receiver, 711 or 721 infrared (IR) detectors, 250-ft cable, and all other control components necessary for a complete and operable system, no substitutes.

Vehicle Detection System TS-2 4-Camera Digital System
Provide Iteris brand or approved equal.

The vendor must have been an authorized distributor of this brand of video vehicle detection systems for at least 3 years. The vendor must have sufficient personnel and facilities to perform any necessary service within 24 hours.

Vision processor and BIU interface module

The size and mounting requirements must be suitable for TS2 vehicle detector rack mounting, All camera input vision processor modules combined shall occupy not more than 2 vehicle detector rack slots, BIU Interface module shall replace standard BIU module in standard vehicle detection rack, and If all video detection modules combined occupy more than 2 vehicle detector rack slots, a separate mounting rack and BIU module shall be provided.

The functions must be NEMA TS-2 compliant, 16 Detector zones per camera (minimum), 4 Camera inputs (minimum), Detector zones can be AND'd or OR'd to provide phase inputs, Detector zones shall hold presence call while a vehicle remains in the zone, Stored detector zones per camera, Controller phase condition monitoring through the controller communications interface, BIU Interface module shall function properly with a combination of vision processor(s) and magnetic loop detection modules within the same rack, and Failsafe modes for video loss, low contrast, and equipment failure.

The I/O connections and indications must be 4 NTSC camera inputs with status LEDs on processor, 4 LEDs indicating detection state on processor, 1 NTSC video output suitable for a

monitor or VCR or DVR recording on processor, 1 mouse connector and mouse, trackball or integral pointing device on processor, 1 RS232 or USB communication port for connection to personal computer on processor, 4 open-collector outputs on card rack connector of processor module, 4 inputs on card rack connector of processor module, 1 BIU interface module data port on processor, 16 LED call status indicators on BIU interface module, 1 DB15 SDLC connector on BIU interface module, 1 Standard TS-2 backplane connector on BIU interface module, and 4 Processor module data ports on BIU interface module.

The environment must be Operating temperature range –34C to +74C minimum, Operating humidity 0% to 95% non-condensing, ability to withstand vibration to 0.5G, 3 axes, 5-30Hz, ability to withstand shock to 10G in all 3 axes, 24V DC @ 300mA max for processor, and 24V DC @ 200mA max for BIU interface module.

The ethernet communications module size and mounting requirements must be Suitable for TS2 vehicle detector rack mounting and Communication module shall occupy not more than 2 vehicle detector rack slots.

The functions shall be NEMA TS-2 compliant, capable of supporting up to 4 processor modules, accommodates up to 4 video source inputs, scalable 32 kbps to 7Mbps MPEG4/H.264 compression format, ability to stream 4 Camera views simultaneously through 1 IP connection, scalable 32 kbps to 7Mbps data transfer rate, and variable 5 to 30 fps video frame rates.

The I/O connections and indications shall be 4 Video-In LED status indicators, online status LED, 1 NTSC video output suitable for a monitor or VCR or DVR recording on processor, 1 RS232 local access port, USB mouse port, 4 processor/extension module input connectors, and 1 RJ45 10/100 Base-T Ethernet connector.

The environment shall be operating temperature range –34C to +74C minimum, operating humidity 0% to 95% non-condensing, ability to withstand vibration to 0.5G, 3 axes, 5-30Hz, ability to withstand shock to 10G in all 3 axes, and 24V DC @ 300mA max.

The camera resolution shall be 470 TVL minimum and 768 x 494 pixels.

The SENSITIVITY shall be minimum 80% video produced at 0.1 Lux scene luminance and 50dB minimum signal to noise ratio.

The lens shall be Focal length and focus adjustable through connector at rear of housing, field of view adjustable between 5.4 deg to 50.7 degrees, Adjustable or Auto focus, electronic shutter and auto-iris, 10X zoom minimum, and full motion 30 frame per second NTSC minimum.

The housing shall be fully enclosed, sealed to NEMA-4 and IP67 specification, 120V AC power supply, mounting bracket suitable for 2” to 4” diameter arm or pole, mounting bracket adjustable on both horizontal and vertical axis, integrated adjustable sunshield with drip guard, internal lens cover heater with proportional power control, maximum dimensions with sunshield 25”L x 5”H, and maximum weight of 10 lbs. (includes camera, lens, housing, sun shield, and base plate).

Video monitor specifications shall be a minimum 12” diagonal LCD or CRT viewing screen, 120VAC powered, 470 TVL minimum and 768 x 494 pixels minimum.

Environmental specifications shall be -34C to +60C, up to 100% Humidity, and vibration-0.5G, 3 axes, 5-30 Hz

Download/upload and configuration storage software components operating system compatibility shall be MS Windows XP SP3 compatible.

The configuration storage per camera, per intersection, Configuration upload and download to vision processor, Upload/Download interface RS232C or USB, Online or offline configuration editing and review, and configuration storage of camera image with detector zones

Cables, connectors, and protection compatibility must be factory tested and approved for compatibility with system components, suitable for installation in underground conduits with 120VAC signal conductors, connectors and cables provided for all video, power, and data connections, minimum 1,000 ft camera signal and power cables suitable for installation in underground conduits with unshielded traffic signal cables, grounded surge/lightning protectors for all camera signal cables, and video signal splitters for processor and communication modules.

Actuated Controller

Actuated Controller shall be Siemens M-60 brand or approved equal.

The vendor must have been an authorized distributor of this brand of video vehicle detection systems for at least 3 years. The vendor must have sufficient personnel and facilities to perform any necessary service within 24 hours.

Maximum enclosure dimensions 11”H x 17”W x 9”D, Shelf-mount aluminum, steel or high-impact polycarbonate enclosure with an operating temperature range -30F to +165F.

The I/O Connections shall be one TS2 type SDLC connector, two 25-pin RS-232 “D” connectors and one 10/100base TX RJ-45 Ethernet port.

Power Requirements are an operating voltage range 89 to 135 VAC., operating frequency range 57 to 63 Hz., and maximum power consumption 35 watts.

The User Interface shall be a minimum LCD display size 8 line x 40 character, LCD display contrast control, Backlit LCD display, weatherproof tactile keypad, Numeric, function, and cursor control keys and Complete programming, editing, and status capability.

The standards and control features shall meets or exceeds NEMA TS2-2003 Actuated controller standards, upgradable to NTCIP functions and able to communicate with existing City of Green Bay traffic signal controllers, permanent program and data retention in EEPROM memory with no battery, Coordination modes: Permissive, Yield, Permissive Yield, Permissive Omit, Sequential Omit, and Full Actuated, 16 Vehicle and pedestrian phases, 4 Timing rings, 16 programmable overlaps, 64 vehicle detector capability, adaptive maximum routines, adaptive

protected/permissive routines, coordination virtual split routine, six pre-emption routines, six priority routines, local alarm log, 120 events, communication fault log, 60 events, detector fault log, 60 events, system detector Log, 96 events, MMU Fault log, 10 events, automatic permissive periods, fixed or floating force-offs, crossing arterial coordination, and configuration upload and download to PC with included factory software.

The time-based control and coordination shall be 250 Total events, 99 Day programs, 10 Week programs, pattern selection event capability, coordination free event capability, intersection flash event capability, intersection dimming event capability, detector diagnostic parameter event capability, system detector logging event capability, three auxiliary function event capabilities, eight special function event capabilities, and sixteen traffic function event capability.

707.3 Construction Methods

Emergency vehicle preemption intersection equipment shall be mounted on the monotube arms as shown on the plans.

The traffic signal arms and poles shall be drilled, and tapped to accommodate the mounting of the EVP equipment as shown in the Plans.

In the event, at installation, a noticeable obstruction is present in line with the EVP equipment, advise the engineer before installation.

Unless otherwise directed by the engineer, the detector shield tube shall be installed with the drain hole at the bottom.

There shall be NO splices in the GPS installation cable from the equipment assembly to the controller terminations.

The EVP GPS installation cables shall be routed to the controller. Each lead shall be appropriately marked as to which street or avenue it is associated.

The EVP as specified and shown in the Plans shall be complete in place, tested, and in full operation.

707.4 Measurement and Payment

The City will pay for measured quantities at the contract unit price under the following bid items:

ITEM #	DESCRIPTION	UNIT
707.01	Traffic Signal Face 3S 12 Inch	EACH
707.02	Traffic Signal Face 4S 12 Inch	EACH
707.03	Traffic Signal Face 5S 12 Inch	EACH
707.04	Pedestrian Signal Face 12 Inch	EACH
707.05	Pedestrian Signal Face 16 Inch	EACH
707.06	Pedestrian Push Buttons	EACH

707.07	Programmable Traffic Signal Face 3S 12 Inch	EACH
707.08	Programmable Traffic Signal Face 4S 12 Inch	EACH
707.09	Programmable Traffic Signal Face 5S 12 Inch	EACH
707.10	Signal Mounting Hardware	LS
707.11	Emergency Vehicle Preemption (EVP) System	EACH
707.12	Vehicle Detection System TS-2 4-Camera Digital System	EACH
707.13	Actuated Traffic Controller	EACH

Page Intentionally Left Blank

SECTION 708

LIGHTING

708.1 General

Perform work in accordance with the provisions of WisDOT Standard Specifications for Highway and Structure Construction Section 651 and 659 except as hereinafter modified.

708.2 Materials

Provide lighting materials as described below or approved equal:

Street Light Fixture Roadway LED 12K Lumens Type 3
Luminaire, streetlight, LED light source, min. 12,000 lumen output, 4k cct, max. 700ma driver, IES Type 3 optics, black color, ANSI 7-wire photocontrol receptacle, NEMA label, shorting cap. American Electric ATB2-60BLEDE70-MVOLT-R3-BK-N1-P7-SH, or Leotek GC1 60F MV NW 3 BLK, 700 PCR7 SC W1, or equal: optional stringent surge protection spec ANSI C136.2-2015 disqualifies Leotek fixtures

Street Light Fixture Roadway LED 9K Lumens Type 3
Luminaire, streetlight, LED light source, min. 9,000 lumen output, 4k cct, max. 700ma driver, IES type 3 optics, black color, ANSI 7-wire photocontrol receptacle, NEMA label, shorting cap. american electric ATB0-40BLEDE70-MVOLT-R3-BK-NL-P7-SH, or Leotek GC1 40F MV NW 3 BLK, 700 PCR7 SC WL, or equal : optional stringent surge protection spec ANSI C136.2-2015 disqualifies Leotek fixtures

Street Light Fixture Roadway LED 9K Lumens Type 3 480V
Luminaire, streetlight, LED light source, min. 9,000 lumen output, 4k cct, max. 700ma driver, IES type 3 optics, 480v, black color, ANSI 7-wire photocontrol receptacle, NEMA label, shorting cap. american electric ATB0-40BLEDE70-480-R3-BK-NL-P7-SH, or Leotek GC1 40F HV NW 3 BK, 700 PCR7 SC WL, or equal: optional stringent surge protection spec ANSI C136.2-2015 disqualifies Leotek fixtures

Streetlight Photo Control 120V
Photo control, streetlight, NEMA plug-in type, 120-volt, 1000-watt, lightning arrestor, Intermatic LC4521C or equal

Streetlight Photo Control 480V
Photo control, streetlight, NEMA plug-in type, 480-volt, 1000-watt, lightning arrestor, Intermatic LC4535 or equal

Street Light Fixture Ornamental Monroe Post Top LED 70W Black
Luminaire, ornamental, utility post-top, black, cast aluminum, 70 watt LED, 350ma 120-277vac driver, asymmetric full-cutoff flat glass optics, spike finial, no photocell socket, 20-ft leads, Holophane PUl0704KASBl3SHl20

Street Light Fixture Ornamental Dousman LED 52W Black
Luminaire, ornamental, post-top, black, cast aluminum, 52 watt 3500k LED, dimmable 120-277vac driver, Type 3 optics, clear-seeded acrylic lens, round finial, no photocell, 3-inch id fitter, Sternberg lighting 1843PT/3ARC35T3/MDL/CSA/BKT

708.3 Construction Methods

Vacant

708.4 Measurement and Payment

The City will pay for measured quantities at the contract unit price under the following bid items:

ITEM #	DESCRIPTION	UNIT
708.01	Street Light Fixture Roadway 12K Lumens Type 3	EACH
708.02	Street Light Fixture Roadway 9K Lumens Type 3	EACH
708.03	Street Light Fixture Roadway 9K Lumens Type 3 480 V	EACH
708.04	Street Light Photo Control 120 V	EACH
708.05	Street Light Photo Control 480 V	EACH
708.06	Street Light Fixture Ornamental Monroe 70 W Black	EACH
708.07	Street Light Fixture Ornamental Dousman 52 W Black	EACH

SECTION 709

TEMPORARY TRAFFIC SIGNALS

709.1 General

Perform work in accordance with the provisions of WisDOT Standard Specifications for Highway and Structure Construction Section 651 and 661 except as hereinafter modified.

709.2 Materials

Vacant

709.3 Construction Methods

Contractor shall contact the Construction Manager to obtain and install the existing traffic signal phasing and timings at each intersection.

709.4 Measurement and Payment

The City will pay for measured quantities at the contract unit price under the following bid items:

ITEM #	DESCRIPTION	UNIT
709.01	Temporary Traffic Signals (Location)	EACH

Page Intentionally Left Blank

DIVISION 8

LANDSCAPING

SECTION 801

TOPSOIL

801.1 General

Perform work in accordance with the provisions of WisDOT Standard Specifications for Highway and Structure Construction Section 625, 627, 629, 630 except as hereinafter modified.

801.2 Materials

Screened topsoil shall be used at all City Parks, at or adjacent to existing private lawns, as specified in the plans, or as directed by the Engineer. Screened topsoil shall consist of 100% of the material passing through a ¾-inch sieve.

801.3 Construction Methods

Areas to be finished with topsoil, salvaged topsoil, or screened topsoil shall be graded to the line and grade established in the plans or by the Engineer. All clods and lumps in material placed on the project shall be broken down by means of harrows, discs or other appropriate equipment to provide a uniformly textured soil. Rocks, twigs, clods that will not break down and other foreign material shall be removed. The top 4 inches of the terrace area and the top 6 inches in all City owned Parks shall meet WisDOT Specifications 625 for Salvaged Topsoil unless otherwise approved of by the Engineer. All planting beds in City owned Parks shall have a minimum of 12 inches of topsoil.

A. Terrace Restoration

Terrace Restoration shall consist of placing Screened Topsoil, Seed Mix No. 5, and Fertilizer Type C on all areas disturbed by work within 48 hours of the completion of the work. A “door hanger” shall be placed at each property that will describe suggested care by the owner/occupant.

B. Hauling Topsoil Offsite

This work shall consist of hauling excess topsoil excavated and stockpiled on site from a contract to a location as directed by the Engineer. The amount of Hauling Topsoil may vary significantly from contract amounts. In the event City sites are unavailable, all material shall be disposed of by the Contractor at his/her own site(s). All sites shall be approved by the Engineer prior to construction. The material to be hauled may not be pure topsoil. There may be a mix of sand, clay, rocks, and/or tree roots in the topsoil to be hauled. No additional compensation will be made for the lack of topsoil quality.

Any surplus excavated material or unsuitable construction material shall remain the property of the City of Green Bay and shall be hauled to, dumped, and placed at a point of disposal designated by the Engineer or as designated in the contract documents. The cost of disposal shall be incidental to the contract. The Engineer may elect to direct this excavated material to an

alternative site at the expense of the Contractor as long as the distance between the project site and the alternative site is not greater than the longest distance between the project site and the specified site in the contract or five miles, whichever is greater. Where the length of haul to a point of disposal designated by the Engineer is farther than the distance from the project site and the specified site or five miles, whichever is greater, the Contractor shall receive compensation at a negotiated price based on labor and vehicle operations costs. If the City of Green Bay does not have use of the surplus material or unsuitable material, it shall be disposed of by the Contractor at a location of their choosing, upon approval of the Engineer, at no additional cost to the City. No surplus or unsuitable excavated material shall be deposited in waters of the state, floodplains, or wetlands.

Property Owner's within the City of Green Bay who receive excess topsoil from the project, are required to have a fill permit from the City of Green Bay. The Contractor shall verify that any property owner receiving fill has taken out a fill permit. Fill permits can be obtained at the City of Green Bay, Department of Public Works/Inspection Division, 100 N. Jefferson Street, Room 604, Green Bay, Wisconsin.

801.4 Measurement & Payment

Terrace Restoration will be measured by the square yard in place completed and approved. The contract unit price of Terrace Restoration, per square yard, shall be full compensation for loading, hauling, backfilling, placing, leveling and compacting excavated materials; and for furnishing all labor, equipment, tools and incidentals necessary to complete the work.

Hauling Topsoil shall be measured by the cubic yard in the vehicle per Section 303.4 (14.8 CY per full load). The volume will be paid for at the contract unit price for Hauling Topsoil which price shall be full compensation for loading, hauling, handling and unloading stockpiled topsoil; and for all labor equipment, tools and incidentals necessary to complete the work.

Imported Topsoil shall be measured by the cubic yard in the vehicle per Section 303.4 (14.8 CY per full load). The volume will be paid for at the contract unit price for Imported Topsoil which price shall be full compensation for materials, equipment, tools, labor, and incidentals necessary to complete the work of furnishing, transporting, placing, compacting, and any other work required as specified.

The City will pay for measured quantities at the contract unit price under the following bid item:

ITEM #	DESCRIPTION	UNIT
801.01	Salvaged Topsoil	SY
801.02	Topsoil	SY
801.03	Topsoil	CY
801.04	Screened Topsoil	SY
801.05	Screened Topsoil	CY
801.06	Terrace Restoration	SY
801.07	Hauling Topsoil	CY
801.08	Imported Topsoil	CY

SECTION 802

MULCHING

802.1 Description

Perform work in accordance with the provisions of WisDOT Standard Specifications for Highway and Structure Construction Section 627 except as hereinafter modified.

802.2 Materials

Shredded Cedar Bark Mulch

The mulch shall consist of shredded cedar bark and shall be substantially free of noxious weed seeds and objectionable foreign material. The mulch used shall meet the approval of the Engineer.

802.3 Construction Methods

Shredded Cedar Bark Mulch

The mulch shall be placed over a tree pit area to a depth of approximately four inches after any necessary backfilling, adjustment, and watering has been performed, unless otherwise specified by the Engineer.

802.4 Measurement and Payment

Shredded Cedar Bark Mulch will be paid at the contract unit price per cubic yard (Truck Measure), which price shall be full compensation for furnishing, placing, hauling and leveling shredded cedar bark mulch; and for all labor, tools, equipment and incidentals necessary to complete the work in accordance with the contract.

The City will pay for measured quantities at the contract unit price under the following bid items:

ITEM #	DESCRIPTION	UNIT
802.01	Mulching	SY
802.02	Mulching	TON
802.03	Shredded Cedar Bark Mulch	CY

Page Intentionally Left Blank

SECTION 803

FERTILIZER

803.1 General

Perform work in accordance with the provisions of WisDOT Standard Specifications for Highway and Structure Construction Section 629 except as hereinafter modified.

803.2 Materials

Fertilizer Type C shall conform to the following minimum requirements:

Nitrogen, not less than 10%
Phosphoric Acid, not less than 10%
Potash, not less than 10%

803.3 Construction Methods

Apply Fertilizer Type C at a rate of 10 lb. per 1,000 square feet.

803.4 Measurement and Payment

The City will measure Fertilizer Type C by the pounds (LB) acceptably completed. All fertilizer items will be measured based on the specified application rate. The contractor shall provide tickets or tags from the used fertilizer bags to the Engineer to verify the type of fertilizer and quantity used.

The City will pay for measured quantities at the contract unit price under the following bid items:

ITEM #	DESCRIPTION	UNIT
803.01	Fertilizer, Type A	CWT
803.02	Fertilizer, Type B	CWT
803.03	Fertilizer, Type C	LB

Page Intentionally Left Blank

SECTION 804

SEEDING

804.1 General

Perform work in accordance with the provisions of WisDOT Standard Specifications for Highway and Structure Construction Section 630 except as hereinafter modified.

804.2 Materials

Seeding Mixture No. 5 shall conform to the following requirements:

60% Improved Kentucky Blue Grass
30% Creeping Red Fescue
10% Annual Rye

804.3 Construction Methods

Apply Seeding Mixture No. 5 at a rate of 5 lb. per 1,000 square feet.
Apply Seeding Mixture No. 40 at a rate of 5 lb. per 1,000 square feet.
Apply Seeding Temporary at a rate of 4 lb. Per 1,000 square feet.

Keep area moist during germination until turf forms a continuous cover with no void spaces greater than 3 square feet. Water is to be applied when natural rainfall occurs at a rate of less than 1" per week. Watering is considered incidental to the seed bid item.

Non-Lawn Areas:

Where shown on the plans or directed by the Engineer, the Contractor shall restore non-lawn disturbed areas with Fertilizer, Type B; Seeding Mixture No. 40; Seeding Temporary; and Mulching.

Existing Lawn Areas:

Where shown on the plans or directed by the Engineer, the Contractor shall restore existing lawn area and area adjacent to existing lawn with either Topsoil and Sod, or Screened Topsoil; Fertilizer Type C; Seeding Mixture No. 5; and Mulching.

804.4 Measurement and Payment

The City will measure the Seeding bid items by the pounds (LB) acceptably completed, measured based on the specified application rate. The Contractor shall provide tickets or tags from the used seed bags to the Engineer to verify the type of seed and quantity used.

The City will pay for measured quantities at the contract unit price under the following bid items:

ITEM #	DESCRIPTION	UNIT
804.01	Seeding Mixture No. 5	LB
804.02	Seeding Mixture No. 10	LB
804.03	Seeding Mixture No. 20	LB
804.04	Seeding Mixture No. 30	LB
804.05	Seeding Mixture No. 40	LB
804.06	Seeding Mixture No. 60	LB
804.07	Seeding Mixture No. 70	LB
804.08	Seeding Mixture No. 70A	LB
804.09	Seeding Temporary	LB
804.10	Seeding Nurse Crop	LB

SECTION 805

SODDING

805.1 General

Perform work in accordance with the provisions of WisDOT Standard Specifications for Highway and Structure Construction Section 624 and 631 except as hereinafter modified.

805.2 Materials

Vacant

805.3 Construction Methods

The Contractor shall prepare the earth bed according to 631.3.1 of the WisDOT Specifications. The Contractor shall place a minimum of 4" of topsoil in the proposed sod area to bring the earth bed to the required grade. When working in a terrace area the contractor shall check the grade for smoothness between the curb and the sidewalk using a string line or other method to verify the topsoil is graded properly (even, level, etc.) prior to placing the sod.

Sod shall be placed in full rolls parallel to major features on site (sidewalk, curb line, etc.). Sod strips less than the full roll width shall be kept to a minimum, and they shall not be placed on the edge of the sod. Where the sod meets existing grass areas the earth bed shall have a butt joint edge to match the existing grass elevation.

At trees, the Contractor shall carefully, by hand as necessary, remove only enough material to lay the sod. The 4" of topsoil is not required in tree root areas. The Contractor may place the sod immediately surrounding the tree higher than the rest of the sod area, creating a tree root hump to minimize potential damage to the tree roots. The Contractor shall perform the work in a way that the area around the trees is attractively landscaped, as directed by the Engineer.

Watering shall take place per 631.3.5 of the WisDOT Specifications.

805.4 Measurement and Payment

Watering for sod shall be incidental to the Sod bid item.

The City will pay for measured quantities at the contract unit price under the following bid items:

ITEM #	DESCRIPTION	UNIT
805.01	Sod	SY

Page Intentionally Left Blank

SECTION 806

VACANT

Page Intentionally Left Blank

SECTION 807

FURNISHING & PLANTING PLANT MATERIALS

807.1 General

Perform work in accordance with the provisions of WisDOT Standard Specifications for Highway and Structure Construction Section 632 except as hereinafter modified.

807.2 Materials

Vacant

807.3 Construction Methods

This work shall be in accordance with Section 632 of the WisDOT Specifications and as follows:

A. Tree Pits

This work shall consist of excavating tree pits including the sump area to the minimum dimensions shown on the plans, and backfilling with screened washed stone (if shown in the plan details) and the approved planting mix as described below. If the contract documents do not include the bid item Tree Pits then the Contractor may excavate a standard hole for the plant or tree and the excavation will be considered incidental to the respective plant item.

The planting mix to be used as backfill in all tree pits shall consist of 75% sandy loam topsoil, 5% sphagnum moss, 10% perlite and 10% calcined clay. The planting mix shall be turned to a uniform consistency and shall be approved by the Engineer prior to use as backfill for plantings.

Topsoil shall be sandy loam, clean of all rocks and debris.

Peat Moss shall consist of at least 75% of partially decomposed stems and leaves of sphagnum, hyponym, polytrichum and other mosses in which the fibrous and cellular structure is still recognizable. It shall be nearly free of decomposed colloidal residue, wood, and other foreign matter, and shall be brown to black in color. Humus peat will not be acceptable. Peat moss shall have the following characteristics:

1. Moisture content shall not exceed 60% by weight.
2. Ash content shall not exceed 20%, based on the oven dry weight of the material.
3. The pH value shall be not less than 3.2 nor greater than 7.0 at 25°C.
4. Water holding capacity shall be not less than 400% by weight, on an oven dry basis.
5. Upon request, the Contractor shall furnish the Engineer with a representative sample of the peat moss for testing in accordance with the Federal Specification for Peat Moss, Peat Humus, and Peat Reed-Sedge numbered Q-P-166c.

6. The Contractor shall furnish the Engineer with a certificate before or at the preconstruction meeting stating the type of peat moss, the brand name, and the country or place of origin. If packed in bales and if bale size is used in determining quantities for mixing, the certificate shall also contain the cubic feet of compressed bale size, the compression ratio, and the approximate weight of the bales. A certificate will not be required if this information is marked on the bales, and a bale tag is provided to the Engineer.

Tree pits may have utility lines within the proposed dimensions of the tree pit. Great care shall be used when excavating around such utilities. No extra compensation will be given for working around utilities.

B. Fertilizing

Fertilizing shall be done after planting and before mulching. Trees shall be fertilized with a formula of 14-3-3 Woodlace fertilizer (or equal) at a rate of 10 briquettes per 1-inch of tree caliper. Shrubs shall be fertilized with a formula of 18-5 Woodlace fertilizer (or equal) at a rate of 16 pounds per 1,000 square feet of shrubs.

C. Mulching

All trees and shrubs shall be mulched with Shredded Cedar Bark to a depth of 4-inches. For trees, the diameter of the mulch shall not be less than the diameter of the plant hole.

D. Pruning

All trees and shrubs shall be pruned in accordance with standard of ANSI Z60.1-1980 to preserve the natural character of the plant. All dead wood, suckers and all broken or badly bruised branches shall be removed. Pruning shall be done with clean, sharp tools. In the case of particularly sensitive or disease prone species, the Contractor shall be required to rinse shears in alcohol or other approved sterilizing agent.

E. Rodent Protection

All trees shall be protected with a T & G Products Woven HI-Density polyethylene tree guard 26” high tree shields with 3 locking ties or equivalent. Bottom of tree guard shall be at least two (2) inches below the finished grade.

F. Cleaning Up

The Contractor shall at all times keep the premises free from the accumulation of waste materials and rubbish caused by their work. When planting in an area, which has been otherwise completed, the area shall be thoroughly cleaned up. All debris, rubbish, excess soil and waste shall be removed from the property. Existing turf areas, which have been injured by the work, shall be re-graded and restored per Section 801 – Terrace Restoration, and the entire area, when completed, shall be neat and clean to the satisfaction of the Engineer.

G. Watering

The Contractor shall water all spring planted material at planting time as well as three more times during the summer/fall of the construction season depending on amount of rainfall received after planting. The Contractor shall supply the water.

H. Replacement

Final inspection shall take place two years after plantings. Any plants which in the opinion of the Engineer are dead or not in good growing condition shall be agreed to in writing and replaced during the following spring planting season.

807.4 Measurement and Payment

Tree Pits will be paid at the contract unit price per each, which price shall be full compensation for all excavation, for disposal of all excess excavation and waste materials, for backfilling, for furnishing washed stone and planting mix, for furnishing and placing root barrier and filter fabric; and for all labor, tools, equipment and incidentals necessary to complete the work in accordance with the contract.

Trees, Shrubs, and Vines shall be paid at the contract unit price per each which is full compensation for planting, fertilizing, mulching, pruning, installing rodent protection, clean-up, and watering; and for all labor, tools, equipment and incidentals necessary to complete the work in accordance with the contract.

The City will pay for measured quantities at the contract unit price under the following bid items:

ITEM #	DESCRIPTION	UNIT
807.01A - Z	Trees (species & size)	EACH
807.02A - Z	Shrubs (species & size)	EACH
807.03A - Z	Vines (species & size)	EACH
807.04	Tree Pits	EACH

Page Intentionally Left Blank

SECTION 808

FENCE

808.1 General

Perform work in accordance with the provisions of WisDOT Standard Specifications for Highway and Structure Construction Section 616 except as hereinafter modified.

808.2 Materials

Vacant

808.3 Construction Methods

Vacant

808.4 Measurement and Payment

The City will pay for measured quantities at the contract unit price under the following bid items:

ITEM #	DESCRIPTION	UNIT
808.01	Woven Wire Fence (height)	LF
808.02	4’ Chain Link Fence	LF
808.03	5’ Chain Link Fence	LF
808.04	6’ Chain Link Fence	LF
808.05	7’ Chain Link Fence	LF
808.06	8’ Chain Link Fence	LF
808.07	10’ Chain Link Fence	LF
808.08	Gates Chain Link (width)	EACH
808.09	Salvaged 4’ Chain Link Fence	LF
808.10	Salvaged 5’ Chain Link Fence	LF
808.11	Salvaged 6’ Chain Link Fence	LF
808.12	Salvaged 7’ Chain Link Fence	LF
808.13	Salvaged 8’ Chain Link Fence	LF
808.14	Salvaged 10’ Chain Link Fence	LF
808.15	Split Rail Wood Fence	LF
808.16	Flat Panel Wood Fence	LF
808.17	Ornamental PVC Fence	LF

Page Intentionally Left Blank

SECTION 809

BRICK PAVERS

809.1 Description

Work shall include furnishing all labor, materials, and equipment necessary to install dry set pavers on a sand-laying course in the location and patterns shown on the plans. Finished paver areas shall be free from bumps or depressions and evenly graded to the lines required.

809.2 Materials

A. Paver

Paver shall be a Holland style 4” x 8” x 2-3 3/8” deep as manufactured by Bend Industries, 2929 Paradise Drive, West Bend, WI, 53905 or approved equal. Paver color shall be Cedar Creek Brown or equal unless otherwise specified by the Engineer. The Contractor shall supply a sample of the paver prior to ordering for approval by the City.

B. Cementitious materials

Materials shall conform to the following applicable ASTM Specifications:

1. Portland Cement – Specification C150
2. Blended Cements – Specification C595
3. Hydrated Lime, Type S – Specification C207
4. Pozzolans – Specification C618

C. Aggregate

Aggregate shall conform to the following ASTM Specifications, except that grading requirement shall not necessarily apply.

1. Normal weight-Specification C33 for Concrete Aggregate
2. Light weight-Specification C33.1, for lightweight aggregates for concrete masonry units.

D. Other Constituents

Air-Entraining agents, coloring pigments, integral water repellents, finely ground silica, etc., shall be previously established as suitable for use in concrete and either shall conform to ASTM Standards where applicable, or shall be shown by test or experience not to be detrimental to the concrete.

E. Physical Requirements

1. Compressive Strength. At the time of delivery to the work site, the average compressive strength shall be not less than 8,500 PSI with no individual unit less than 7,500 PSI.

2. Absorption. The average absorption shall be greater than 5%, with no individual unit greater than 7%.

3. Durability. The manufacturer shall satisfy the purchaser by either proven field performance or the laboratory freeze-thaw test that the paving units have adequate durability if they are to be subjected to a freeze-thaw environment.

   a. Proven Field Performance. Satisfactory field performance is indicated when units similar in composition, and made with the same manufacturing process as those to be supplied to the purchaser, do not exhibit objectionable deterioration after at least three years. The units used as the basis for proven field performance shall have been exposed to the same general type environment, temperature range, and traffic volume as is contemplated for the units supplied to the purchaser.

   b. Freeze-Thaw Test. When tested in accordance with Section 8 of ASTM C 67-73, Specimens shall have no breakage and not greater than 1.0% loss in dry weight of any individual unit when subjected to 50 cycles of freezing or thawing. This test shall be conducted not more than 12 months prior to delivery of units.

   c. Abrasion Resistance. When tested in accordance with ASTM C 418-76, “Abrasion Resistance of Concrete by Sandblasting”, Specifications shall not have great volume loss than 15 cubic centimeters per 50 square centimeters. The average thickness loss shall not exceed 3 millimeters.

F. Permissible Variations in Dimensions

Length or width of units shall not differ by more than 1/16-inch from approved samples. Heights of units shall not differ by more than 1/8-inch from the specified standard dimension.

G. Visual Inspection

All units shall be sound and free of defects that would interfere with the proper placing of unit or impair the strength or permanence of the construction. Minor cracks incidental to the usual methods of manufacture, or minor chipping resulting from customary methods of handling in shipping and delivery, shall not be deemed grounds for rejection.

H. Sampling and Testing

1. The Engineer shall be accorded proper facilities to inspect and sample the units at the place of manufacture from the lots ready for delivery.

2. Sample and test units in accordance with ASTM Methods C140, Sampling and Testing concrete masonry units, except as required in Section 3.3.

3. Tests shall be made on every shipment to verify that pavers meet or exceed the physical requirements outlined above.

I. Rejection

In case the shipment fails to conform to the specified requirements, the manufacturer may sort it, and new specimens shall be selected by the purchaser from the retained lot and tested at the expense of the manufacturer. In case the second set of specimens fail to conform to the test requirements, the entire lot shall be rejected.

J. Sand Laying Course

The sand-laying course shall consist of clean course concrete sand, not mason sand, with the following gradation limits:

Sieve Size	% Passing
3/8”	100
4	90-100
8	80-95
16	55-85
50	10-35
200	0-5

K. Steel Edging

Steel edging shall consist of steel with interlocking system and stake punch outs fabricated in each strip.

809.3 Construction Methods

A. General

1. The Contractor shall submit before construction to the Engineer for approval, samples of the pavers and color range requested. The sample shall be securely banded or mounted in a pattern emulating a pattern appearing in the project. The paver shall be approved before the construction of a field sample panel.

2. Upon approval of the field sample panel, the Contractor shall construct for approval a 200 square foot panel in one of the project paving areas. If the sample is approved, it may be left as part of the final paving. If not approved, the panel will be reconstructed until acceptable. This work will be considered incidental to the brick pavers.

B. Construction of the Sand Laying Course

1. The finished base course shall be approved by the Engineer before placement of the sand-laying course. Permission to commence with the sand course shall mean acceptance of the crushed aggregate base course.

2. The sand-laying course shall be spread evenly over the area to be paved and screeded to a level that will produce the required 1-1/4-inch thickness when the paving stones have been placed and vibrated.

3. Once screeded and leveled, this sand-laying course shall not be disturbed in any way.

C. Laying of Pavers

1. The brick paver stones shall be laid in the patterns shown on the plans and in the details.

2. Utility covers in the areas to be paved shall be adjusted to finished grades.

3. The brick paver stones shall be laid in such a manner that the desired pattern is maintained and the joints between the stones do not exceed 1/8-inch.

4. The gaps at the edges of the paved surface shall be filled with brick pavers cut to fit tightly. The stones shall be cut to a straight, even surface without cracks or chips. Brick pavers shall be cut to fit closely around existing surface features.

5. The brick pavers shall be vibrated to their final level by 2 or 3 passes of a vibrating plate compactor.

6. After first vibration, sand containing at least 30% of 1/8-inch particles shall be brushed over the surface and vibrated into the joints with additional passes of the plate vibrator so as to completely fill joints.

7. Surplus material shall then be swept from the surface and the entire site left clean.

8. After final vibrating, the surface shall be true to grade and shall not vary by more than ¼-inch when tested with a 10-foot board at any location on the surface.

9. Install steel edging with stakes at a minimum of 5 stakes per 16 foot section. Top of edging not to exceed ½" above finished grade. Backfill and compact along both sides of edging.

809.4 Measurement and Payment

The contract unit price of Brick Pavers shall be full compensation for furnishing all materials, including sand; for preparation of the laying bed, paver installation; for job site clean-up and for all tools, equipment and incidentals to complete the work.

The contract unit price of Remove & Relay Brick Pavers shall be full compensation for furnishing all materials, include the removal and disposal of the steel edging, and the removal, salvage, and stockpiling of the existing pavers to be reinstalled, including sand; for preparation of the laying bed, paver installation; for job site clean-up and for all tools, equipment and incidentals to complete the work.

Remove and Salvage Brick Pavers will include the removal and disposal of the steel edging, and the removal, salvage, and stockpiling of the existing pavers.

Steel edging will be incidental to installation of brick pavers as required.

The City will pay for measured quantities at the contract unit price under the following bid items:

ITEM #	DESCRIPTION	UNIT
809.01	Brick Pavers	SF
809.02	Remove & Relay Brick Pavers	SF
809.03	Remove & Salvage Brick Pavers	SF

Page Intentionally Left Blank

SECTION 810

RETAINING WALL

810.1 Description

This special provision describes designing, furnishing materials and erecting a permanent earth retention system in accordance with the lines, dimension, elevations and details as shown on the plans and provided in the contract. The design life of the wall and all wall components shall be 75 years.

810.2 Materials

A. Proprietary Split Block Retaining Wall Systems

Proprietary wall systems may be used for this work, but must conform to the requirements of this specification and be pre-approved for use by the City. The name of the companies supplying pre-approved material shall be furnished within 25 days after the award of contract. The City maintains a list of pre-approved systems of retaining walls. To be eligible for use on this project, a system must have been pre-approved and added to that list prior to the bid opening date.

Applications for pre-approval may be submitted at any time. Applications must be prepared in accordance with the requirements of chapter 14 of the WisDOT's Bridge Manual. Information and assistance with the pre-approval process can be obtained by contacting the City Department of Public Works or by calling (920) 448-3100.

The modular block gravity wall shall be one of the following pre-approved proprietary wall systems hereinafter specified:

1. Keystone Retaining Wall Systems
   Supplied By: Best Block Company
   W140 N5870 Lilly Road
   Menomonee Falls, WI 53051
   (414) 781-7200

2. Rockwood Retaining Wall Systems
   Supplied By: Rockwood Retaining Walls
   W6558 Hwy. 33
   Juneau, WI 53039
   (800) 248-7456

3. Rockwood Retaining Wall Systems
   Supplied By: Rockwood Retaining Walls
   7200 N. Hwy. 63
   Rochester, MN 55906
   (800) 535-2375

4. Allan Block Retaining Wall Systems
   Supplied By: Quality Concrete Products
   P.O. Box 130
   Sussex, WI 53089
   (800) 776-7221

5. Mesa Retaining Wall Systems
   Supplied By: Van Der Vaart Concrete Inc.
   1440 S. 16th St.
   Sheboygan, WI 53081
   (920) 459-2417

6. Anchor Wall Systems
   Supplied By: Anchor Block Company
   8201 Brooklyn Boulevard
   Brooklyn Park, MN 55445
   (763) 425-9779

B. Design Requirements

It is the responsibility of the Contractor to supply a design and supporting documentation as required by this special provision for review by the Engineer to show that the proposed wall design is in compliance with the design specifications. Four copies (4) of the following shall be submitted to the Engineer for review and acceptance no later than 21 days before wall construction is scheduled to begin.

The design/shop plans shall be prepared on reproducible sheets 11-inch x 17-inch, including borders. Each sheet shall have a title block in the lower right corner. The title block shall include the project identification number and structure number. Design calculations and notes shall be on 8-1/2-inch x 11-inch sheets, and shall contain the project identification number, name or designation of the wall, date of preparation, initials of designer and checker, and page number at the top of the page. All plans and calculations shall be signed, sealed and dated by a professional engineer licensed in the State of Wisconsin.

The design of the Split Block Retaining Wall shall be in conformance with the latest edition of the AASHTO Standard Specifications for Highway Bridges including interim specifications, the standard specifications, and standard engineering design procedures as determined by the Engineer. The design must include analyses that clearly show the factors of safety for overturning, sliding and soil bearing stress. The width of the modular block from front face to back face of the wall shall be given in the design computations and shown on the wall shop drawings.

The minimum embedment to the bottom of the modular block shall be 1-1/2-feet, or as specified in the plan.

C. Wall System Components

Materials furnished under this contract shall conform to the requirements hereinafter provided.

1. Backfill

Wall Backfill, Type A, shall comply with the requirements for coarse aggregate No. 1 as given in 501.2.5.4 of the WisDOT Specifications. All backfill placed within a zone from the base of the leveling pad to the top of the final layer of wall facing units and within 1 foot behind the back face of the wall shall be Wall Backfill, Type A. This includes all material used to fill openings in the wall facing units.

A layer of Geotextile Fabric Type "DF" (Schedule B) shall be placed vertically between the retained soil and the Type A backfill. The geotextile fabric shall extend from the top of the leveling pad to 6 inches below the surface of the retained soil. The geotextile shall then wrap across the top of the Type A backfill to the back of block wall facing.

2. Wall Facing

Provide wall-facing units that consist of precast modular concrete blocks. All units shall incorporate a mechanism or device that will develop a mechanical connection between vertical block layers. A single block type and style shall be used throughout each wall. The color of the block shall be as given on the plan, or chosen by the Engineer. The Engineer will reject wall-facing units that are chipped, cracked or unsightly.

The top course of facing units shall be a solid precast concrete unit designed to be compatible with the remainder of the wall. The finishing course shall be bonded to the underlying facing units with a durable, high strength, flexible adhesive compound compatible with the block material. A formed cast-in-place concrete cap may also be used to finish the wall. A cap of this type shall be designed to have texture, color, and appearance that complement the remainder of the wall. The vertical dimension of the cap shall not be less than 3-1/2-inches. Expansion joints shall be placed in the cap to correspond with each 24-inch change in vertical wall height or at a maximum spacing of 10 feet. Concrete for all cast-in-place caps shall be Grade A and shall conform to the requirements of 501.3 of the WisDOT Specifications.

Block dimensions may vary no more than ±1/8-inch from the standard values published by the manufacturer. Blocks must have a minimum depth (front face to back face) of 8-inches. The minimum front face thickness of blocks shall be 4-inches measured perpendicular from the front face to inside voids greater than 4 square inches. Also the minimum allowed thickness of any other portion of the block is 2-inches.

The front face of the blocks shall conform to plan requirements for color, texture, or patterns.

Cementitious materials and aggregates for modular blocks shall conform to the requirements of ASTM C1372 Section 4.1 and 4.2. Modular blocks shall meet the following requirements.

Test	**Method**	**Requirement**
Compressive Strength (psi)	ASTM C140	5000 min.
Water Absorption (%)	ASTM C140	6 max.
Freeze-Thaw Loss (%)	ASTM C1262 (1)	
40 cycles, 5 of 5 samples		1.0 max. (2)
50 cycles, 4 of 5 samples		1.5 max. (2)

(1) Test shall be run using a 3% saline solution.

(2) Test results that meet either of the listed requirements for Freeze-Thaw Loss are acceptable.

At the time of delivery, furnish the Engineer a certified test report from a WisDOT-approved independent testing laboratory for each lot of modular blocks. The certified test report shall clearly identify the firm conducting the sampling and testing, the type of block, the date sampled, name of the person who conducted the sampling, the represented lot, the number of blocks in the lot, and the specific test results for each of the stated requirements of this specification. A lot shall not exceed 5000 blocks. The certified test results will represent all blocks within the lot. Each pallet of blocks delivered shall bear lot identification information. Block lots that do not meet the requirements of this specification or blocks without supporting certified test reports will be rejected and shall be removed from the project at the Contractor's expense.

A WisDOT-approved independent testing laboratory shall control and conduct all modular block sampling and testing for this specification. Prior to sampling, the manufacturer’s representative shall identify all pallets of modular blocks contained in each lot. All pallets of blocks within the lot shall be numbered and marked to facilitate random sample selection. The representative of the independent testing laboratory shall identify five pallets of blocks by random numbers and shall then select one block from each of these pallets. Solid blocks used as a finishing or top course shall not be selected. The selected blocks shall remain under the control of the person who conducted the sampling until shipped or delivered to the testing laboratory. All pallets of blocks within a lot shall be strapped, tagged, wrapped, or marked to secure the contents. The Engineer will reject any pallet of blocks delivered to the project without intact security measures. The Contractor shall remove all rejected blocks from the project at no expense to the City.

The City may conduct testing of modular blocks lots with certified test results delivered to the project. If a random sample of 5 blocks of any lot tested by the City fails to meet any of the requirements of this specification, the engineer will apply the provisions of 105.3.2 of the WisDOT Specifications - Nonconforming Work to that portion of the work containing blocks from the failed lot. However, the Engineer will reduce the contract bid price for this item by a minimum of 10%. The Contractor shall remove all blocks from the failed lot not installed in the finished work from the project at the direction of the Engineer and at no cost to the City. In addition, the City will remove the modular block supplier from the pre-approved list of suppliers for the City of Green Bay.

3. Leveling Pad

For all walls over 5 feet tall measured from the top of the leveling pad to the top of the wall, the wall leveling pad shall consist of a 6 inch deep by 12 inch (minimum) wide poured concrete masonry pad made from Grade A concrete as specified in section 501 of the WisDOT Standard Specifications for Highway and Structure Construction, 2003 Edition. The leveling pad shall be as wide as the proposed blocks or a minimum of 12 inches whichever is greater. The bottom of the blocks shall be flat and 100% of the block surface shall bear on the leveling pad. A concrete leveling pad shall be used for the entire length of the wall. All walls with a Structure Number assigned (such as R-XX-XXX) shall be built using the concrete leveling pad given above. The leveling pad shall step to follow the general slope of the ground line. The leveling pads steps shall keep the bottom of the wall within one block's thickness of the minimum embedment (minimum embedment plus up to the thickness of one block). Additional embedment may be detailed but will not be measured for payment.

On walls less than or equal to 5-feet in height, a compacted 1-foot deep by 2-foot wide leveling pad made from base aggregate dense 1-1/4-inch as given in section 305 of the WisDOT Specifications may be used.

810.3 Construction Methods

Construct the split block retaining wall in accordance with the manufacturer's instructions, at the locations and to the dimensions shown on the plan, and as directed by the Engineer. At the end of each working day, provide good temporary drainage such that the backfill shall not become contaminated with run-off soil or water if it should rain. Do not stockpile or store materials or large equipment on top of the wall, or within 10-feet of the front face of the wall.

Place materials in the areas as indicated on the plans and as detailed in this specification. Backfill lifts shall be no more than 8-inches in depth. Backfilling shall closely follow erection of each course of wall facing units.

Compact each layer of wall backfill Type A with at least three passes of lightweight manually operated compaction equipment acceptable to the Engineer.

Conduct backfilling operations in such a manner as to prevent damage or misalignment of the wall facing units. At no expense to the City, correct any such damage or misalignment as directed by the Engineer.

Do not operate tracked or wheeled equipment within 3-feet of the back face of the blocks. The Engineer may order the removal of any large or heavy equipment that may cause damage or misalignment of the wall facing units.

After construction of the wall, restore the surrounding area located above and below all precast block retaining wall sites to its original condition and to the finished details on the plans.

Geotechnical data to be used in the design of the wall is given on the wall plan. The allowable soil bearing capacity (safety factor = 2.0) is given on the plan. After completion of excavation, the City will inspect the site and will determine if the foundation is adequate for the intended loads. Allow the City two working days to perform the inspection.

810.4 Measurement and Payment

The City will measure Split Block Retaining Wall in area by the square foot of face on a vertical plane between the top of the leveling pad and a line indicating the top of wall including wall cap or copings as required and shown on the plans. Unless directed by the Engineer, wall area constructed above these limits will not be measured for payment.

Payment is full compensation for supplying a design and shop drawings; preparing the site, including all necessary excavation and disposal of surplus materials; supplying all necessary wall components to produce a functional system including cap and copings; constructing the retaining system; providing backfill, backfilling, and compacting the backfill; furnishing and installing geotextile fabric; and for furnishing all tools, labor, equipment, and incidentals necessary to complete the contract work. Parapets, railings, and other items above the wall cap or coping will be paid for separately.

Any required topsoil, fertilizer, seeding or sodding and mulch will be paid for at the contract unit price of topsoil, fertilizer, seeding or sodding and mulch, respectively.

The City will pay for measured quantities at the contract unit price under the following bid items:

ITEM #	DESCRIPTION	UNIT
810.01	Split Block Retaining Wall	SF

CITY OF GREEN BAY

DETAIL DRAWINGS

For Public Works Construction

City of Green Bay, Wisconsin
Department of Public Works
100 North Jefferson Street, Room 300
(920) 448-3100
greenbaywi.gov

2020 Edition

Division 1 Detail Drawings

Project ID Sign

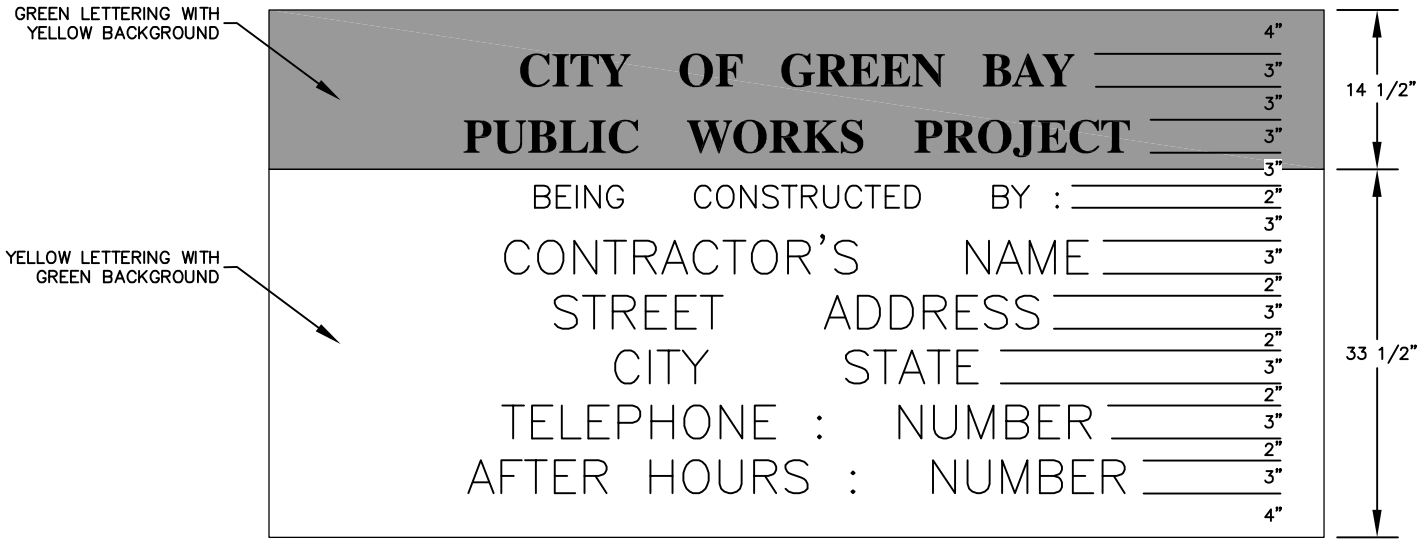

GENERAL NOTES

1. SIGN SIZE TO BE 4' x 8' x 3/4" PLYWOOD OR APPROVED ALTERNATE MATERIAL
2. SIGNS TO BE MOUNTED AND SECURED AS APPROVED BY ENGINEER
3. ALL LINES TO BE CENTERED ON SIGN
4. LETTERING TO BE PROFESSIONALLY PAINTED ON SIGN

CITY OF GREEN BAY DEPARTMENT OF PUBLIC WORKS ENGINEERING DIVISION	PROJECT ID SIGN	CITY OF GREEN BAY STANDARD SPECIFICATION 2020 EDITION

Division 3 Detail Drawings

Silt Fence

Turbidity Barrier Placement Details

Inlet Protection Type A, B, C, and D

Stone Tracking Pad

Rock Filled Erosion Control Bags

Erosion Mat Installation

Riprap at Apron Endwalls

Staking Layout for Inlets

Staking Detail for Inlets

NOTES:

① TRENCH SHALL BE A MINIMUM OF 4" WIDE AND 6" DEEP TO BURY AND ANCHOR THE GEOTEXTILE FABRIC. FOLD MATERIAL TO FIT TRENCH, BACKFILL, AND COMPACT TRENCH WITH EXCAVATED SOIL.

② WOOD POSTS SHALL BE A MINIMUM SIZE OF 1"x1" MADE OF OAK OR HICKORY.

③ ADDITIONAL POST DEPTH OR TIE BACKS MAY BE REQUIRED IN UNSTABLE SOILS.

④ CONSTRUCT SILT FENCE FROM A CONTINUOUS ROLL IF POSSIBLE BY CUTTING LENGTHS TO AVOID JOINTS. IF A JOINT IS NECESSARY, USE EITHER THE TWIST METHOD OR HOOK METHOD TO JOIN SEGMENTS.

⑤ CONSTRUCTION, OPERATION AND MAINTENANCE SHALL BE IN ACCORDANCE WITH WDNR CONSERVATION PRACTICE STANDARD 1056.

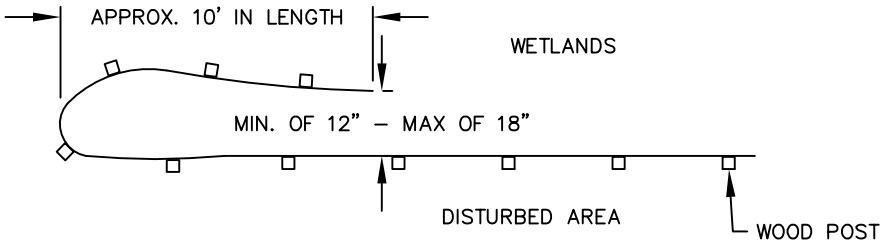

SILT FENCE END TURN–AROUND

FOR USE IN AREAS NEAR WETLANDS ONLY

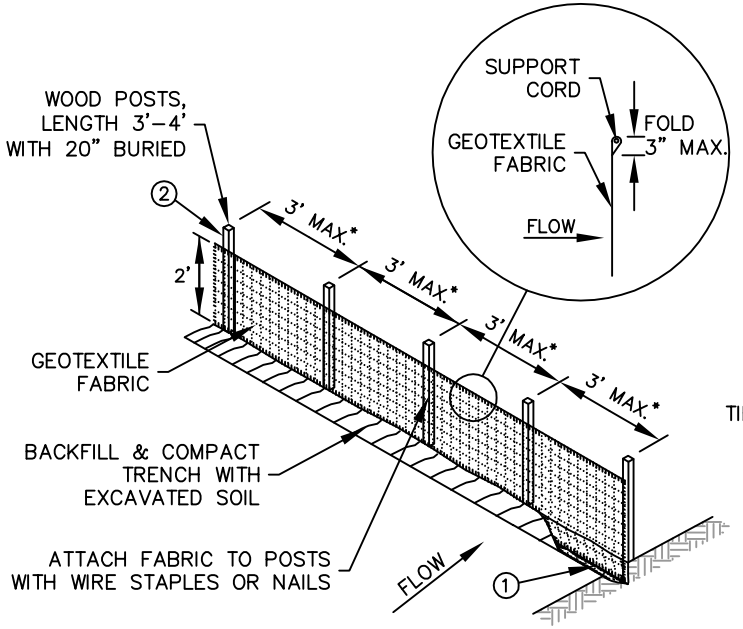

*NOTE:
8' POST SPACING ALLOWED IF A WOVEN GEOTEXTILE FABRIC IS USED

SILT FENCE

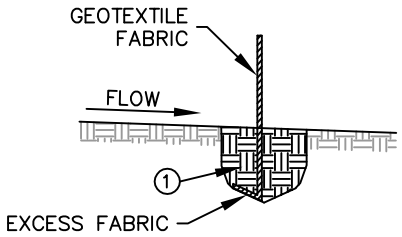

TRENCH DETAIL

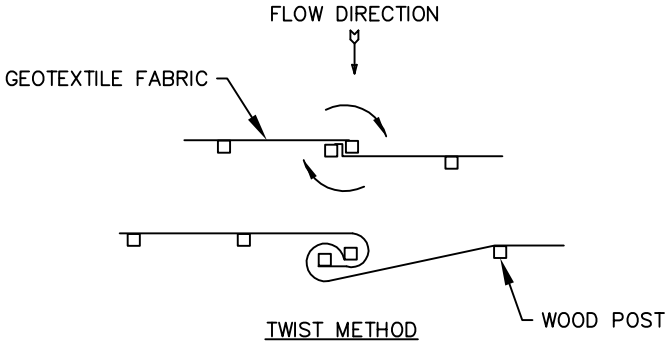

TWIST METHOD

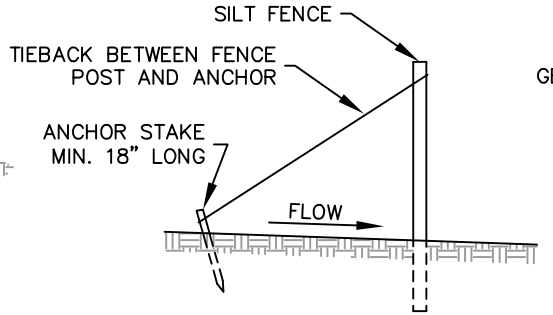

SILT FENCE TIE BACK
(WHEN ADDITIONAL SUPPORT REQUIRED)

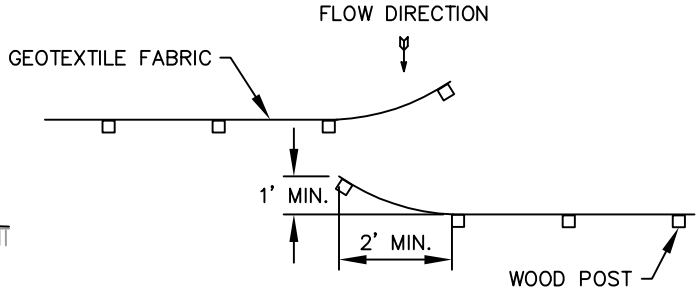

HOOK METHOD

JOINING TWO LENGTHS OF SILT FENCE

This drawing based on Wisconsin Department of Transportation Standard Detail Drawing

CITY OF GREEN BAY
DEPARTMENT OF PUBLIC WORKS
ENGINEERING DIVISION

SILT FENCE

CITY OF GREEN BAY
STANDARD SPECIFICATION
2020 EDITION

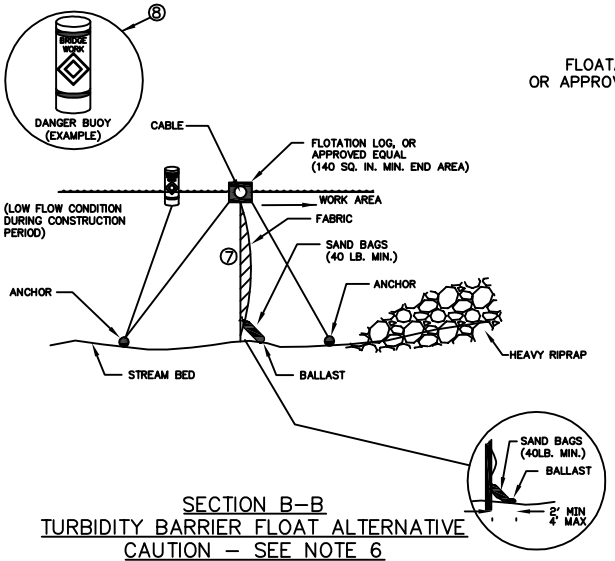

SECTION B–B
TURBIDITY BARRIER FLOAT ALTERNATIVE
CAUTION – SEE NOTE 6

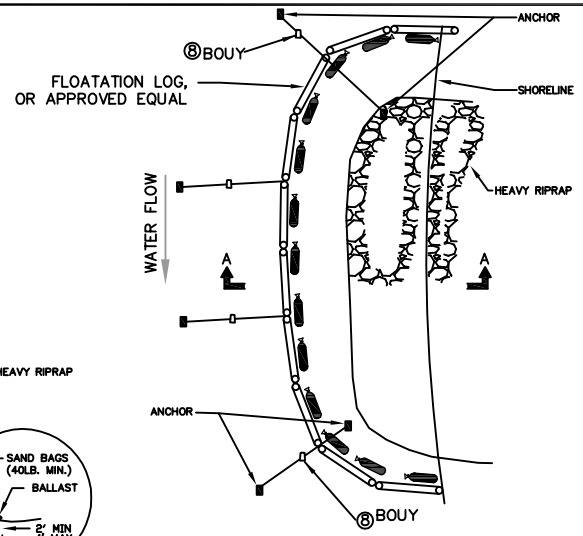

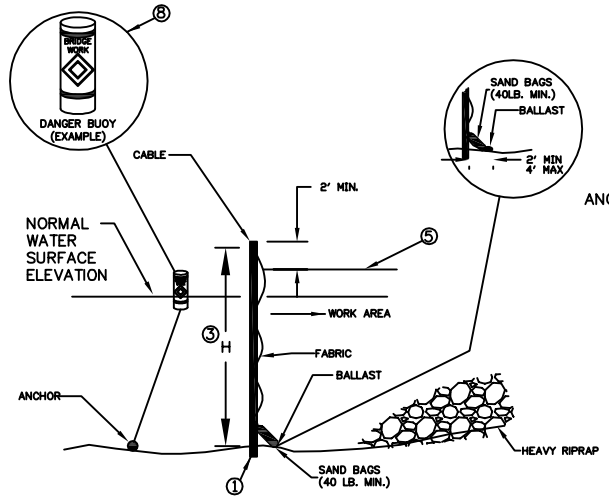

SECTION A–A
TURBIDITY BARRIER STANDARD POST INSTALLATION

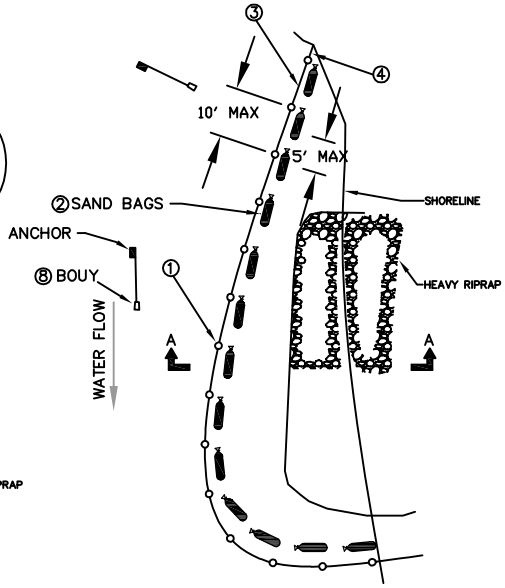

PLAN VIEW

GENERAL NOTES

DETAILS OF CONSTRUCTION, MATERIALS AND WORKMANSHIP NOT SHOWN ON THIS DRAWING SHALL CONFORM TO THE PERTINENT REQUIREMENTS OF THE STANDARD SPECIFICATIONS AND THE APPLICABLE SPECIAL PROVISIONS.

TURBIDITY BARRIER MAY BE REMOVED AT THE ENGINEERS DISCRETION, WHEN PERMANENT EROSION CONTROL MEASURES HAVE BEEN ESTABLISHED.

① DRIVEN STEEL POSTS, PIPES, OR CHANNELS. LENGTH SHALL BE SUFFICIENT TO SECURELY SUPPORT BARRIER AT HIGH WATER ELEVATIONS.

② SANDBAGS TO BE USED AS ADDITIONAL BALLAST WHEN ORDERED BY THE ENGINEER TO MEET ADVERSE FIELD CONDITIONS. SPACE AS APPROPRIATE FOR SITE CONDITIONS.

③ WHEN BARRIER HEIGHT, H, EXCEEDS 8 FT. POST SPACING MAY NEED TO BE DECREASED.

④ IN WATERWAYS SUBJECT TO FLUCTUATING WATER ELEVATIONS, PROVISIONS, SHOULD BE MADE TO ALLOW THE WATER TO EQUALIZE ON EACH SIDE OF THE BARRIER. THIS MAY BE ACCOMPLISHED BY LEAVING A PORTION OF THE BARRIER OPEN ON THE UPSTREAM END.

⑤ ESTIMATED HIGH WATER ELEVATION DURING CONSTRUCTION PERIOD. MINIMUM BARRIER HEIGHT SHALL BE 2' GREATER THAN EITHER THE O2 ELEVATION OR THE ESTIMATED HIGH WATER ELEVATION DURING CONSTRUCTION, WHICHEVER IS GREATER.

⑥ FLOAT ALTERNATIVE WILL ONLY BE ALLOWED WITH WRITTEN APPROVAL OF THE ENGINEER. AND IS MEANT FOR LOCATIONS WHERE BED ROCK PREVENTS THE INSTALLATION OF POSTS.

⑦ ALLOW SUFFICIENT SLACK VERTICALLY AND HORIZONTALLY SO THAT SEDIMENT BUILD UP WILL NOT SEPEREATE OR LOWER THE TURBIDITY BARRIER.

⑧ USE AS DIRECTED BY COAST GUARD OR DNR PERMIT WHEN WORKING IN NAVIGABLE WATERWAYS.

*THIS DRAWING BASED ON WISCONSIN DEPARTMENT OF TRANSPORTATION STANDARD DETAIL DRAWING 8e11–2

CITY OF GREEN BAY
DEPARTMENT OF PUBLIC WORKS
ENGINEERING DIVISION

TURBIDITY BARRIER PLACEMENT DETAILS

CITY OF GREEN BAY
STANDARD SPECIFICATION
2020 EDITION

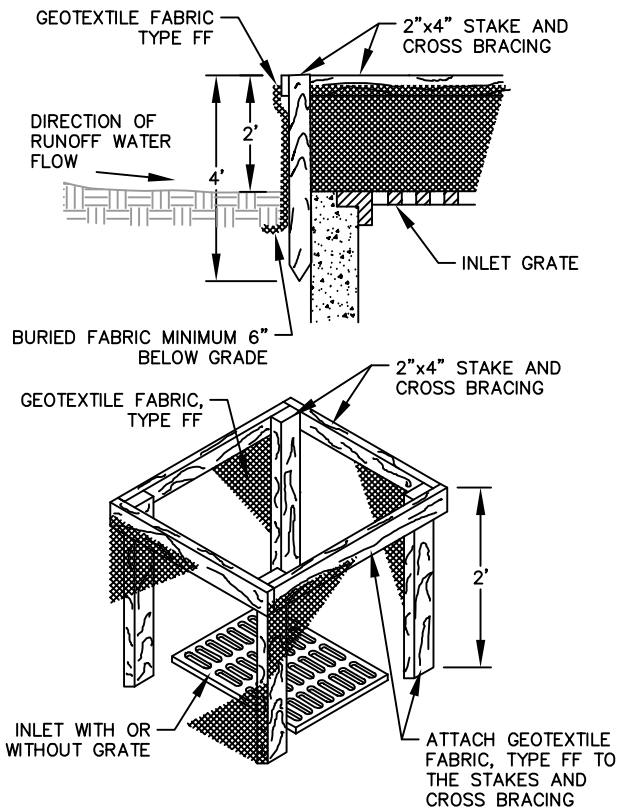

INLET PROTECTION, TYPE A

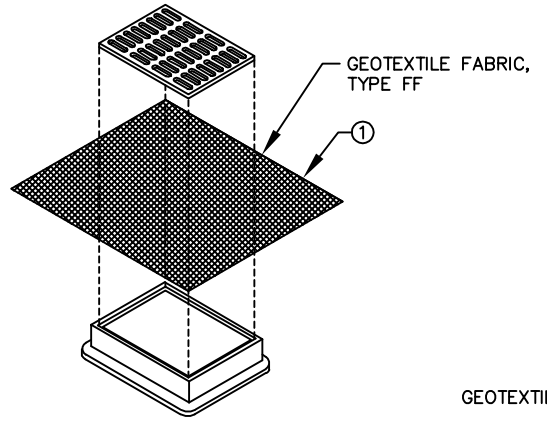

INLET PROTECTION, TYPE B
(WITHOUT CURB BOX)

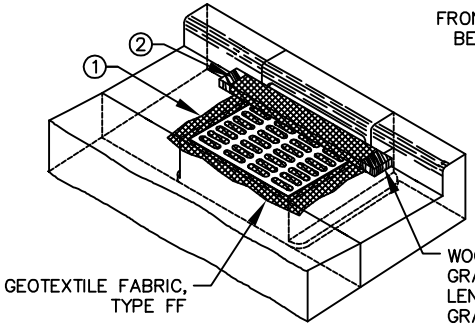

INLET PROTECTION, TYPE C
(WITH CURB BOX)

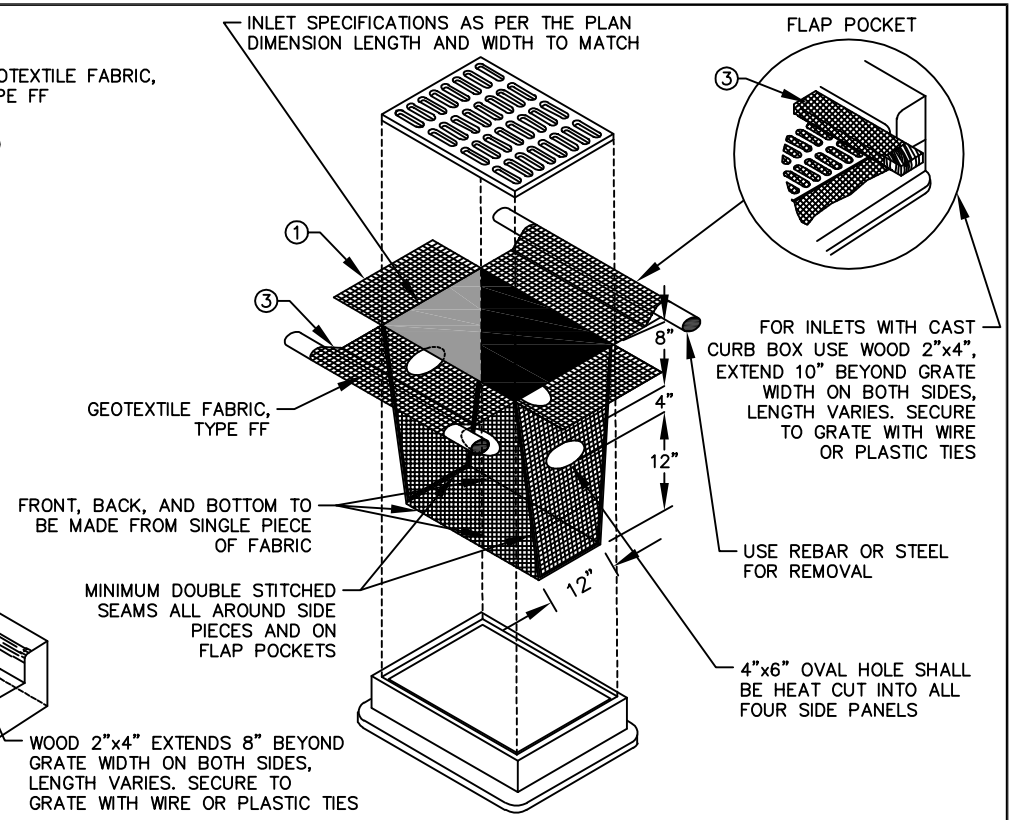

INLET PROTECTION, TYPE D
(CAN BE INSTALLED IN ANY INLET WITH OR WITHOUT A CURB BOX PER NOTE 3)

GENERAL NOTES:

1. FINISHED SIZE, INCLUDING FLAP POCKETS WHERE REQUIRED, SHALL EXTEND A MINIMUM OF 10" AROUND THE INLET PERIMETER TO FACILITATE MAINTENANCE AND REMOVAL.

2. FOR INLET PROTECTION, TYPE C (WITH CURB BOX), AN ADDITIONAL 18" OF FABRIC IS WRAPPED AROUND THE WOOD AND SECURED WITH STAPLES. THE WOOD SHALL NOT BLOCK THE ENTIRE HEIGHT OF THE CURB BOX OPENING.

3. FLAP POCKETS SHALL BE LARGE ENOUGH TO ACCEPT WOOD 2"x4".

MANUFACTURED ALTERNATIVES APPROVED AND LISTED ON THE WIS DOT'S EROSION CONTROL PRODUCT ACCEPTABILITY LIST MAY BE SUBSTITUTED. WHEN REMOVING OR MAINTAINING INLET PROTECTION, CARE SHALL BE TAKEN SO THAT THE SEDIMENT TRAPPED ON THE GEOTEXTILE FABRIC DOES NOT FALL INTO THE INLET. ANY MATERIAL THAT FALLS INTO THE INLET SHALL BE REMOVED IMMEDIATELY.

CONSTRUCTION, OPERATION, AND MAINTENANCE SHALL BE IN ACCORDANCE WITH WDNR CONSERVATION PRACTICE STANDARD 1060.

INSTALLATION NOTES:

TYPE B & C

TRIM EXCESS FABRIC IN THE FLOW LINE TO WITHIN 3" OF THE GRATE. THE CONTRACTOR SHALL DEMONSTRATE A METHOD OF MAINTENANCE, USING A SEWN FLAP, HAND HOLDS, OR OTHER METHOD TO PREVENT ACCUMULATED SEDIMENT FROM ENTERING THE INLET.

TYPE D

DO NOT INSTALL INLET PROTECTION TYPE D IN INLETS SHALLOWER THAN 30", MEASURED FROM THE BOTTOM OF THE INLET TO THE TOP OF THE GRATE.

TRIM EXCESS FABRIC IN THE FLOW LINE TO WITHIN 3" OF THE GRATE.

THE INSTALLED BAG SHALL HAVE A MINIMUM SIDE CLEARANCE, BETWEEN THE INLET WALLS AND THE BAG, MEASURED AT THE BOTTOM OF THE OVERFLOW HOLES, OF 3" WHERE NECESSARY. THE CONTRACTOR SHALL CINCH THE BAG, USING PLASTIC ZIP TIES, TO ACHIEVE THE 3" CLEARANCE. THE TIES SHALL BE PLACED AT A MAXIMUM OF 4" FROM THE BOTTOM OF THE BAG.

CITY OF GREEN BAY DEPARTMENT OF PUBLIC WORKS ENGINEERING DIVISION	INLET PROTECTION TYPE A, B, C, AND D	CITY OF GREEN BAY STANDARD SPECIFICATION 2020 EDITION

MANUFACTURED TRACKOUT CONTROL DETAIL

PLAN VIEW

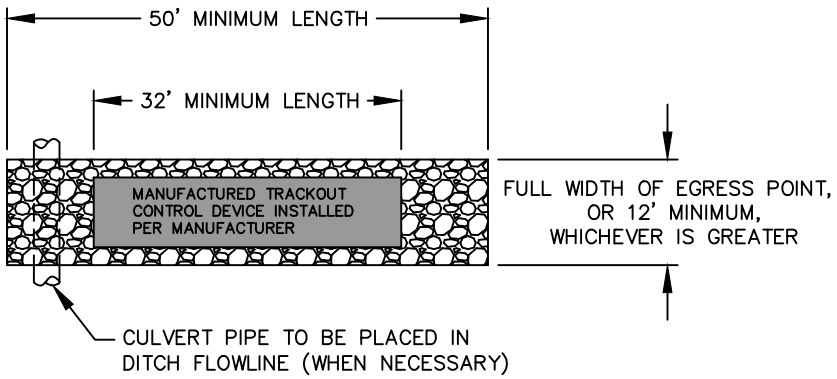

PROFILE VIEW

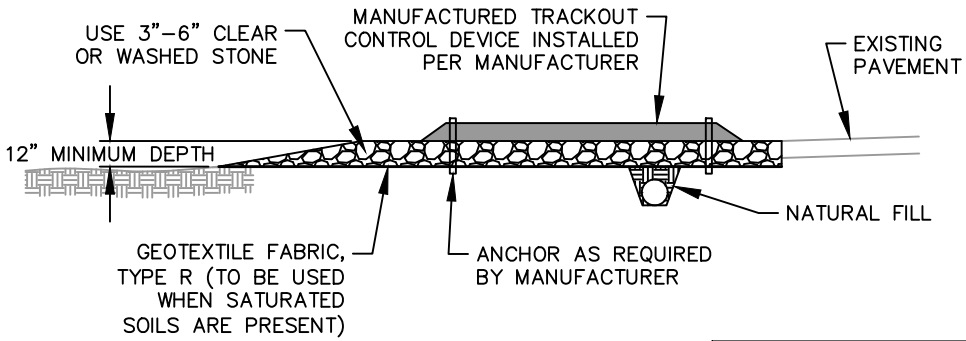

STONE TRACKING PAD DETAIL

PLAN VIEW

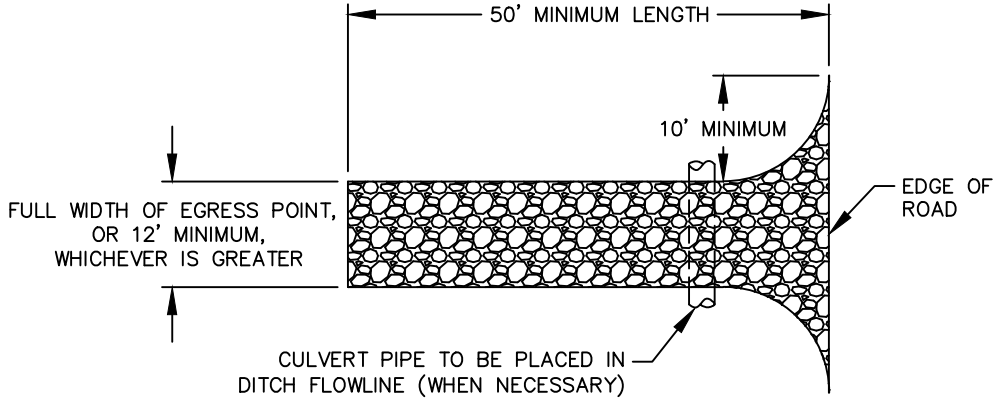

PROFILE VIEW

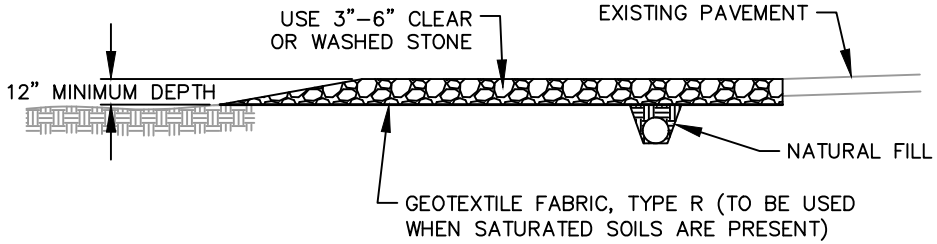

NOTE:
CONSTRUCTION, OPERATION AND MAINTENANCE SHALL BE IN ACCORDANCE WITH WISCONSIN DNR CONSERVATION PRACTICE STANDARD 1057

CITY OF GREEN BAY DEPARTMENT OF PUBLIC WORKS ENGINEERING DIVISION	STONE TRACKING PAD & MANUFACTURED TRACKOUT CONTROL	CITY OF GREEN BAY STANDARD SPECIFICATION 2020 EDITION

NOTES:

30"x16" ROCK FILLED FILTER BAG SHALL BE COMPRISED OF THE FOLLOWING:

HIGH DENSITY POLYETHYLENE BAG

HIGH DENSITY POLYETHYLENE DRAW STRING KNITTED DIRECTLY INTO BAG OPENING

80% FABRIC CLOSURE WITH APPARENT OPENING SIZE NO LARGER THAN 1/8"x1/8" ROLLED SEAM USING A MINIMUM OF 480 DENIER POLYESTER SEWING YARN FOR STRENGTH AND DURABILITY

USE WELL GRADED COARSE AGGREGATE CONFORMING TO THE FOLLOWING GRADATION REQUIREMENTS

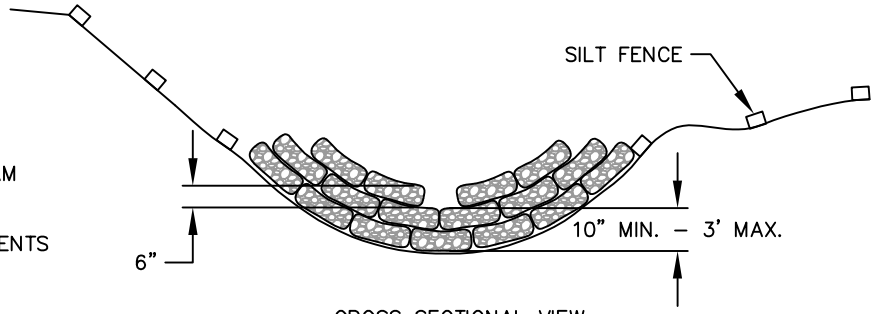

CROSS SECTIONAL VIEW

COARSE AGGREGATE SPECIFICATIONS

SIEVE SIZE	PERCENT PASSING
1 1/2 INCH (37.5mm)	100
1 INCH (25.0mm)	100
3/4 INCH (19.0mm)	90–100
3/8 INCH (9.5mm)	20–55
No. 4 (4.75mm)	0–10
No. 8 (2.36mm)	0–5

SIZE No. ACCORDING TO AASHTO M 43

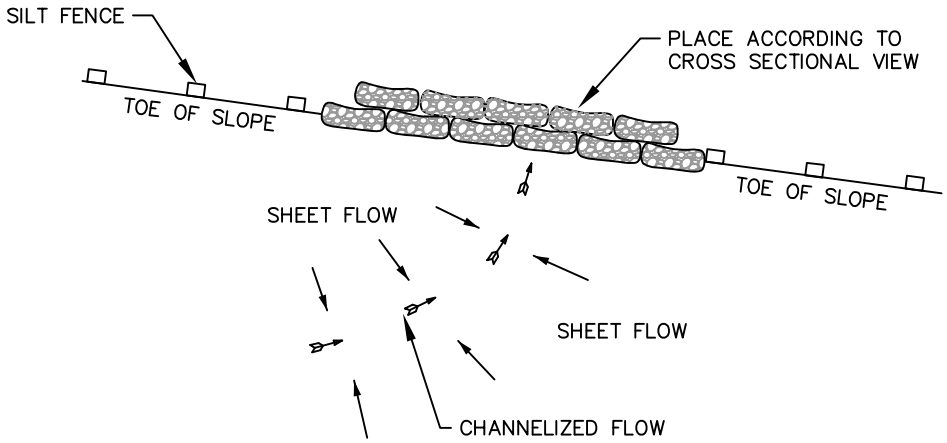

PLAN VIEW

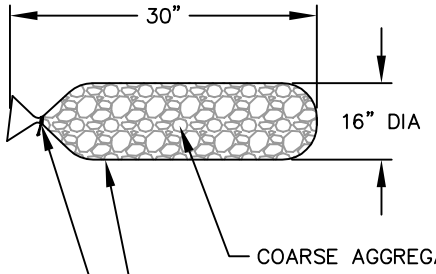

DRAW STRING KNITTED DIRECTLY INTO BAG OPENING

COARSE AGGREGATE

HIGH DENSITY POLYETHYLENE (HDPE) FABRIC

FILTER BAG DETAIL
(PRIOR TO INSTALLATION)

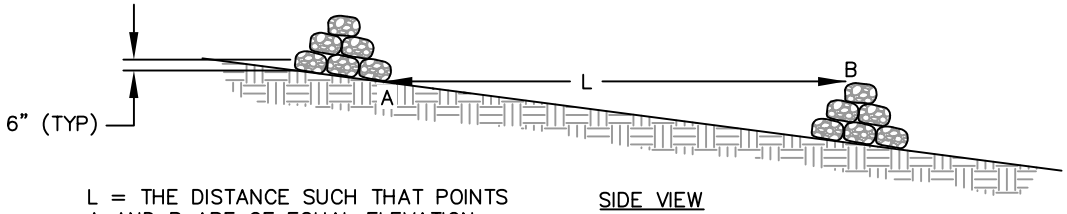

L = THE DISTANCE SUCH THAT POINTS A AND B ARE OF EQUAL ELEVATION

SIDE VIEW

DITCH CHECK DETAIL

CITY OF GREEN BAY DEPARTMENT OF PUBLIC WORKS ENGINEERING DIVISION	ROCK FILLED EROSION CONTROL BAGS	CITY OF GREEN BAY STANDARD SPECIFICATION 2020 EDITION

WisDOT CLASS I TYPE B
EROSION MAT INSTALLATION

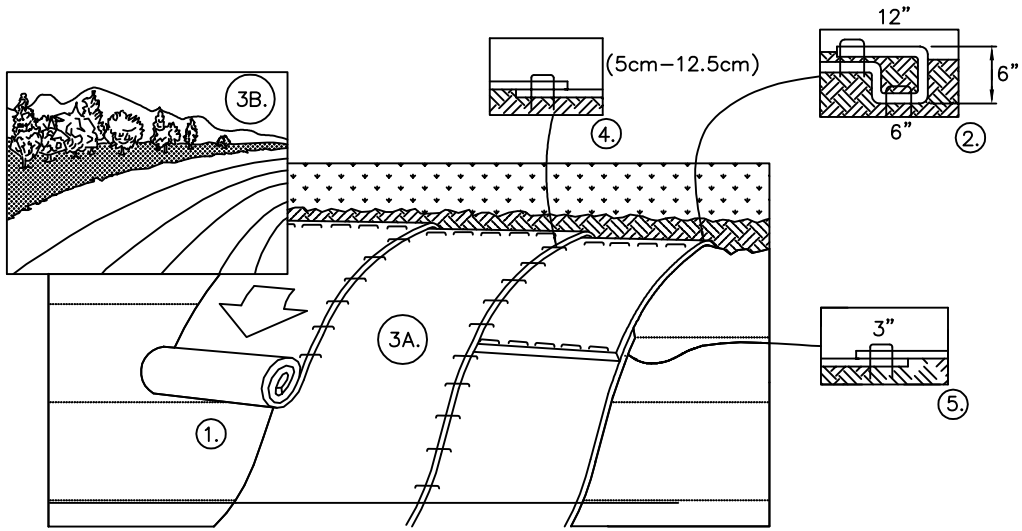

NOTE:
*IN LOOSE SOIL CONDITIONS, THE USE OF STAPLE OR STAKE LENGTHS GREATER THAN 6" MAY BE NECESSARY TO PROPERLY SECURE THE BLANKETS

① PREPARE SOIL BEFORE INSTALLING BLANKETS, INCLUDING ANY NECESSARY APPLICATION OF LIME, FERTILIZER, AND SEED.
NOTE: WHEN USING CELL–O–SEED DO NOT SEED PREPARED AREA. CELL–O–SEED MUST BE INSTALLED WITH PAPER SIDE DOWN.

② BEGIN AT THE TOP OF THE SLOPE BY ANCHORING THE BLANKET IN A 6" DEEP X 6" WIDE TRENCH WITH APPROXIMATELY 12" OF BLANKET
EXTENDED BEYOND THE UP–SLOPE PORTION OF THE TRENCH. ANCHOR THE BLANKET WITH A ROW OF STAPLES/STAKES APPROXIMATELY 12" APART IN THE BOTTOM OF THE TRENCH. BACKFILL AND COMPACT THE TRENCH AFTER STAPLING. APPLY SEED TO COMPACTED SOIL AND FOLD REMAINING 12" PORTION OF BLANKET BACK OVER SEED AND COMPACTED SOIL. SECURE BLANKET OVER COMPACTED SOIL WITH A ROW OF STAPLES/STAKES SPACED APPROXIMATELY 12" APART ACROSS THE WIDTH OF THE BLANKET.

③ ROLL THE BLANKETS (A.) DOWN OF (B.) HORIZONTALLY ACROSS THE SLOPE. BLANKETS WILL UNROLL WITH APPROPRIATE SIDE AGAINST THE SOIL SURFACE. ALL BLANKETS MUST BE SECURELY FASTENED TO SOIL SURFACE BY PLACING STAPLES/STAKES IN APPROPRIATE LOCATIONS AS SOWN IN THE STAPLE PATTERN GUIDE. WHEN USING OPTIONAL DOT SYSTEM, STAPLES/ STAKES SHOULD BE PLACED THROUGH EACH OF THE COLORED DOTS CORRESPONDING TO THE APPROPRIATE STAPLE PATTERN.

④ THE EDGES OF PARALLEL BLANKETS MUST BE STAPLED WITH APPROXIMATELY 2"–5" OVERLAP DEPENDING ON BLANKET TYPE.
TO ENSURE PROPER SEAM ALIGNMENT, PLACE THE EDGE OF THE OVERLAPPING BLANKET (BLANKET BEING INSTALLED ON TOP) EVEN WITH THE COLORED SEAM STITCH ON THE PREVIOUSLY INSTALLED BLANKET.

⑤ CONSECUTIVE BLANKETS SPLICED DOWN THE SLOPE MUST BE PLACED END OVER END (SHINGLE STYLE) WITH APPROXIMATE 3" OVERLAP.
STAPLE THROUGH OVERLAPPED AREA, APPROXIMATELY 12" APART ACROSS ENTIRE BLANKET WIDTH.

CITY OF GREEN BAY DEPARTMENT OF PUBLIC WORKS ENGINEERING DIVISION	EROSION MAT INSTALLATION	CITY OF GREEN BAY STANDARD SPECIFICATION 2020 EDITION

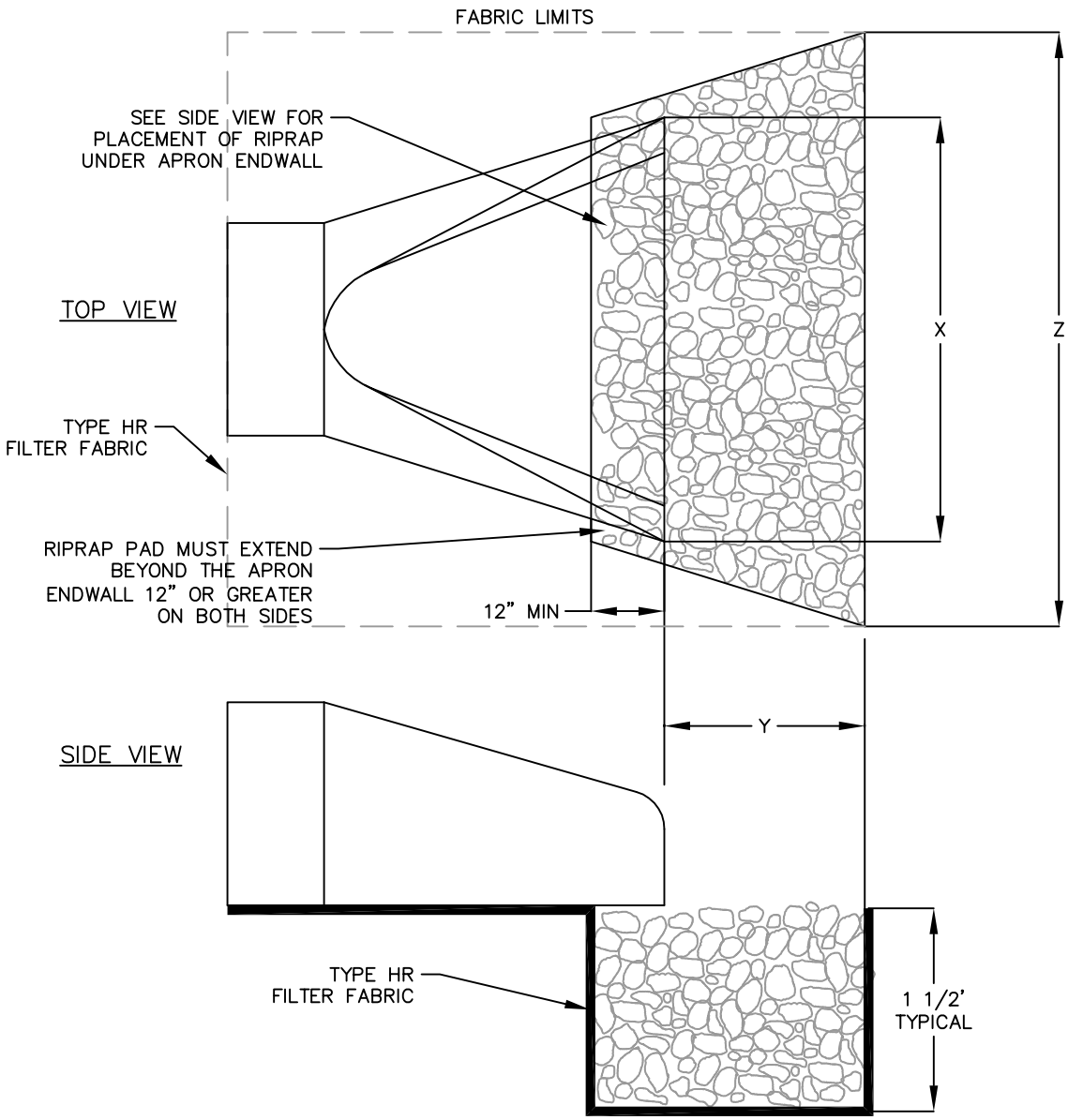

DIA (in)	X (in)	Y (in)	Z (in)	APPROX. WEIGHT (tons)
12	24	48	48	1.78
15	30	60	60	2.64
18	36	60	60	2.78
21	42	72	72	3.83
24	48	72	72	4.00
27	54	72	81	4.42
30	60	84	90	5.64
36	72	96	108	7.56
42	78	96	120	8.22
48	84	108	120	9.50
54	90	108	150	11.00
60	96	108	162	11.75
66	102	132	174	15.28
72	108	132	186	16.19

GENERAL NOTES:

1. CITY OF GREEN BAY STANDARD SPECIFICATIONS SHALL APPLY TO ALL INSTALLATIONS.
2. ENDWALLS 36" AND GREATER SHALL HAVE JOINT TIES TO PIPE SECTIONS.
3. TWIN APRON INSTALLATIONS SHALL BE GOVERNED BY THE OUTSIDE DIMENSIONS OF A SINGLE PIPE.
4. APRON ENDWALL SHALL USE SAME BEDDING SECTION AS CULVERT.

CITY OF GREEN BAY
DEPARTMENT OF PUBLIC WORKS
ENGINEERING DIVISION

RIPRAP AT APRON ENDWALLS

CITY OF GREEN BAY
STANDARD SPECIFICATION
2020 EDITION

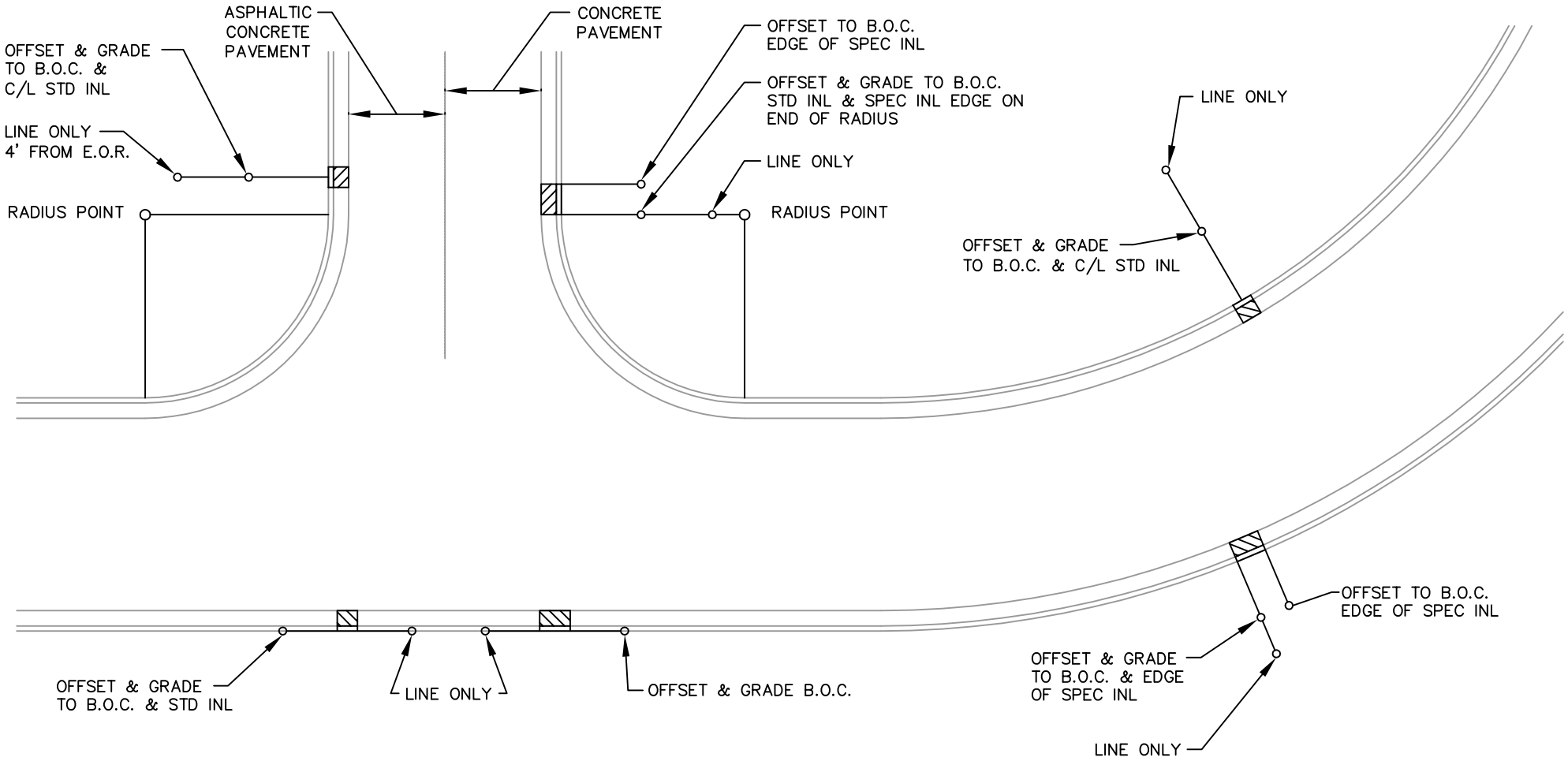

① NOTE:
STRADDLE STAKING ON B.O.C. LINE SHALL ONLY BE ALLOWED ON STRAIGHT SECTIONS

CITY OF GREEN BAY DEPARTMENT OF PUBLIC WORKS ENGINEERING DIVISION	STAKING LAYOUT FOR INLETS	CITY OF GREEN BAY STANDARD SPECIFICATION 2020 EDITION

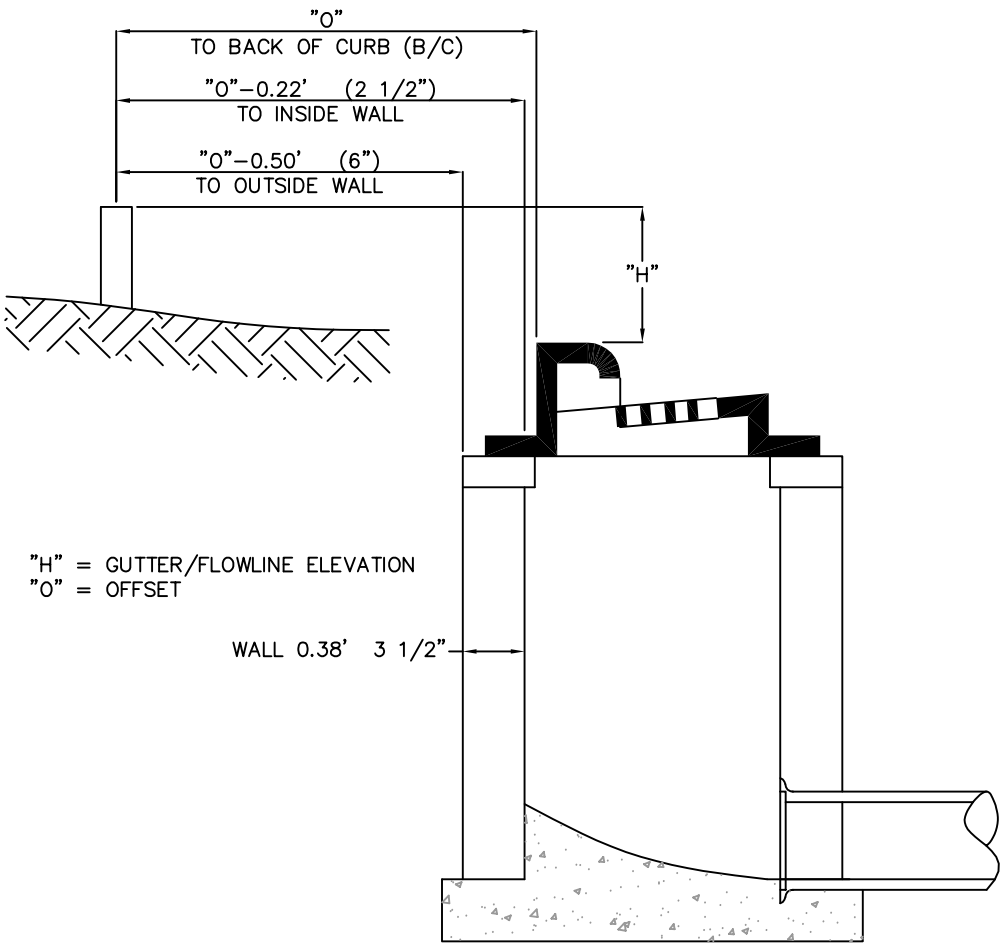

STANDARD INLET

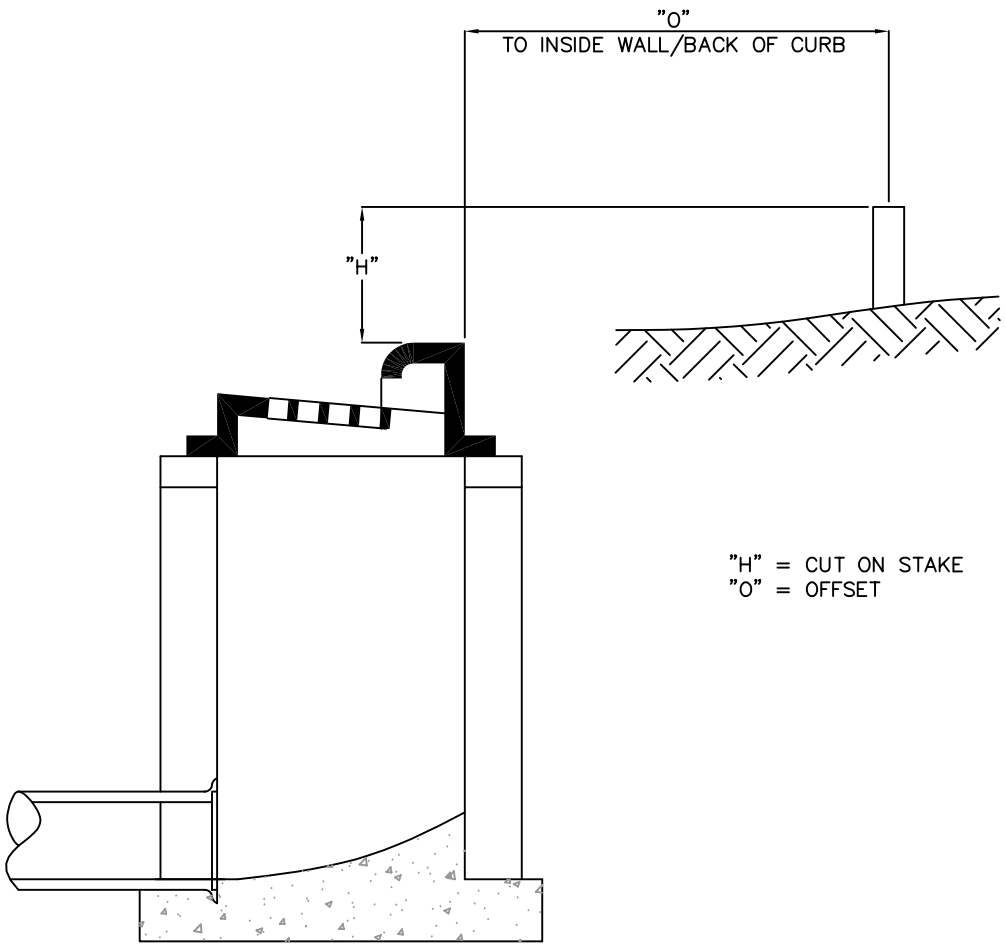

SPECIAL INLET

CITY OF GREEN BAY
DEPARTMENT OF PUBLIC WORKS
ENGINEERING DIVISION

STAKING DETAIL FOR INLETS

CITY OF GREEN BAY
STANDARD SPECIFICATION
2020 EDITION

Division 4 Detail Drawings

Crushed Stone Cradle with Unstable Subgrade

Concrete Encasement Concrete Cradle

Concrete Blanket

Concrete Collar

Concrete Encasement

Drain Tile

6 Inch Underdrain

Rock Excavation

Typical House Re-Connection

Concrete Endwall and Grate

Tracer Wire Splice Connection

Manhole 48 Inch to 96 Inch Diameter and Shallow Manhole with Flat Top

Type “B” Manhole

Type “C” Manhole

Type “D” Manhole

Type “E” Manhole

Standard Manhole with Inside Drop and with Precast or Poured Concrete Outside Drop

Division 4 Detail Drawings - Continued

Reconstruct Standard Type “A” Block Manhole

Standard Inlet with Underdrain

Special Inlet with Underdrain

Modified Special/Standard Inlet and Manhole

Standard Alley/Parking Lot Drain and Catch Basin

Standard Inlet Casting

Special Inlet Casting

8” Manhole Casting and Covers

Mini Storm Sewer Cleanout and Wye Direction

Mini Storm with Frost Sleeve

Typical Mini Storm Sewer Connection and Augering

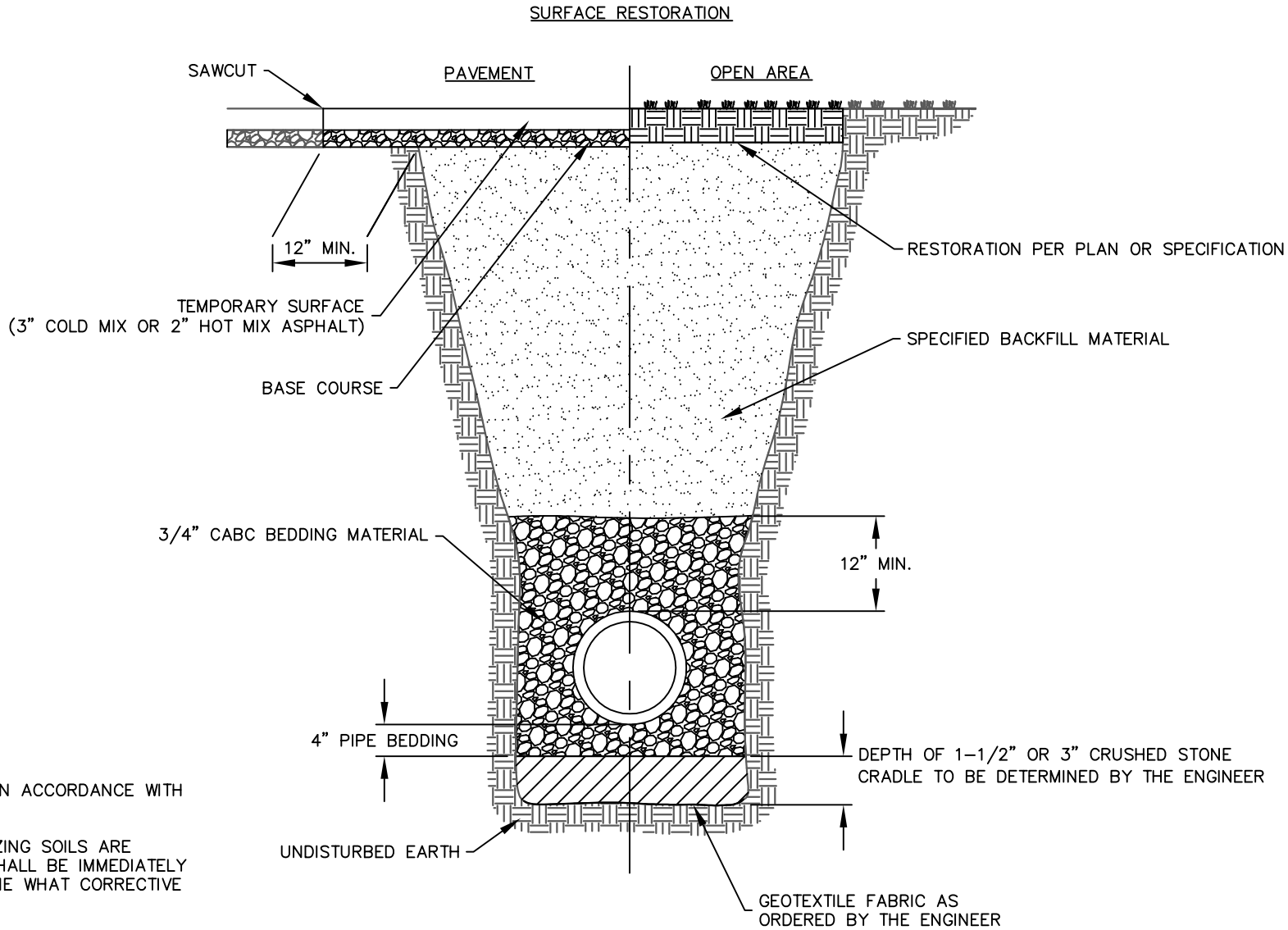

NOTES:
ALL PIPE SHALL BE INSTALLED IN ACCORDANCE WITH ASTM DESIGNATION D 2321

IF RUNNING, CAVING, OR SQUEEZING SOILS ARE ENCOUNTERED, THE ENGINEER SHALL BE IMMEDIATELY NOTIFIED IN ORDER TO DETERMINE WHAT CORRECTIVE MEASURES SHALL BE TAKEN

TRENCH WIDTH WILL VARY DEPENDING ON SOIL CONDITIONS

CITY OF GREEN BAY DEPARTMENT OF PUBLIC WORKS ENGINEERING DIVISION	CRUSHED STONE CRADLE WITH UNSTABLE SUBGRADE	CITY OF GREEN BAY STANDARD SPECIFICATION 2020 EDITION

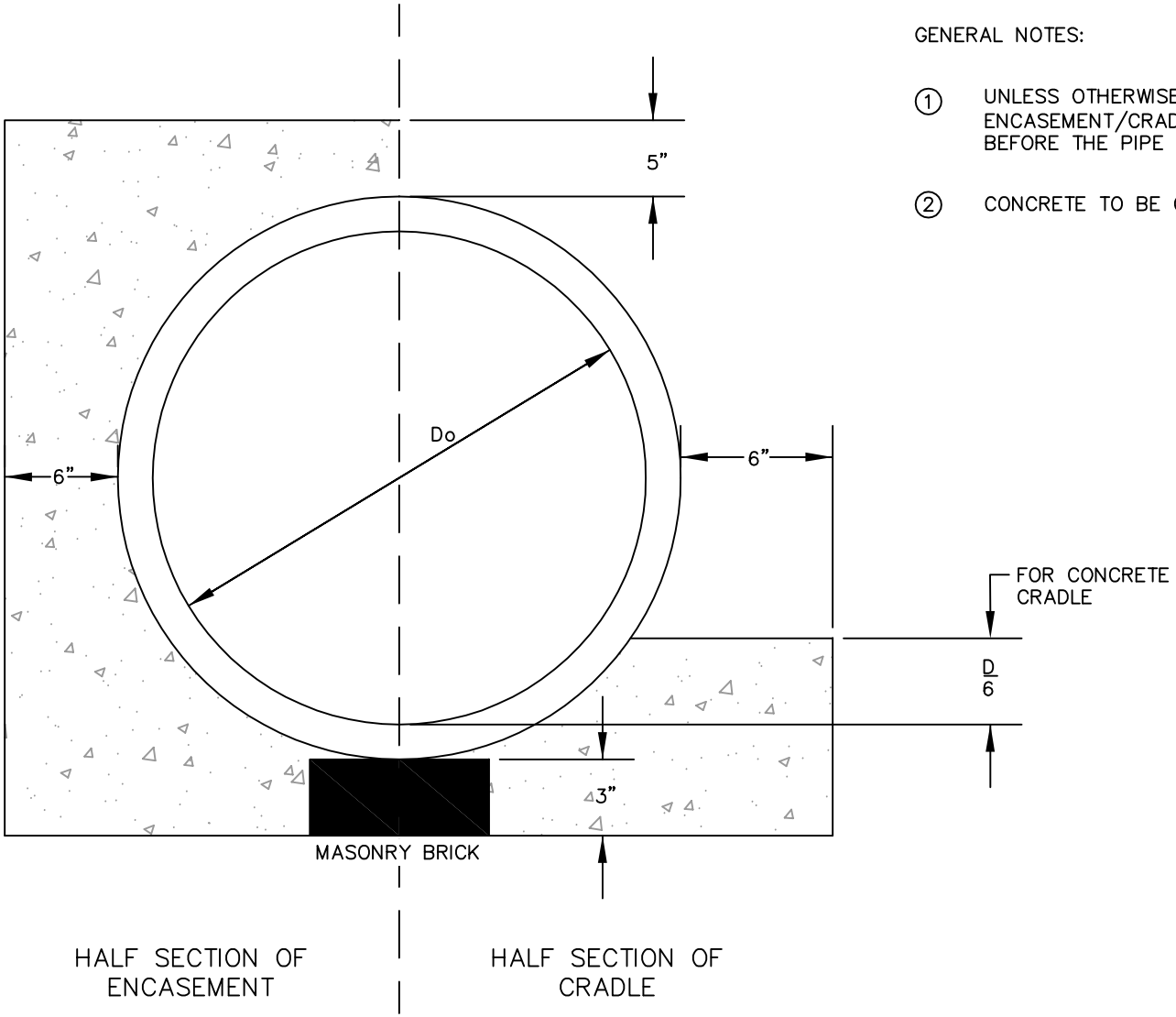

GENERAL NOTES:

1. UNLESS OTHERWISE DIRECTED BY THE ENGINEER, CONCRETE ENCASEMENT/CRADLE SHALL BE PLACED AT LEAST 24 HOURS BEFORE THE PIPE IS PLACED.

2. CONCRETE TO BE GRADE "A"

CITY OF GREEN BAY DEPARTMENT OF PUBLIC WORKS ENGINEERING DIVISION	CONCRETE ENCASEMENT CONCRETE CRADLE	CITY OF GREEN BAY STANDARD SPECIFICATION 2020 EDITION

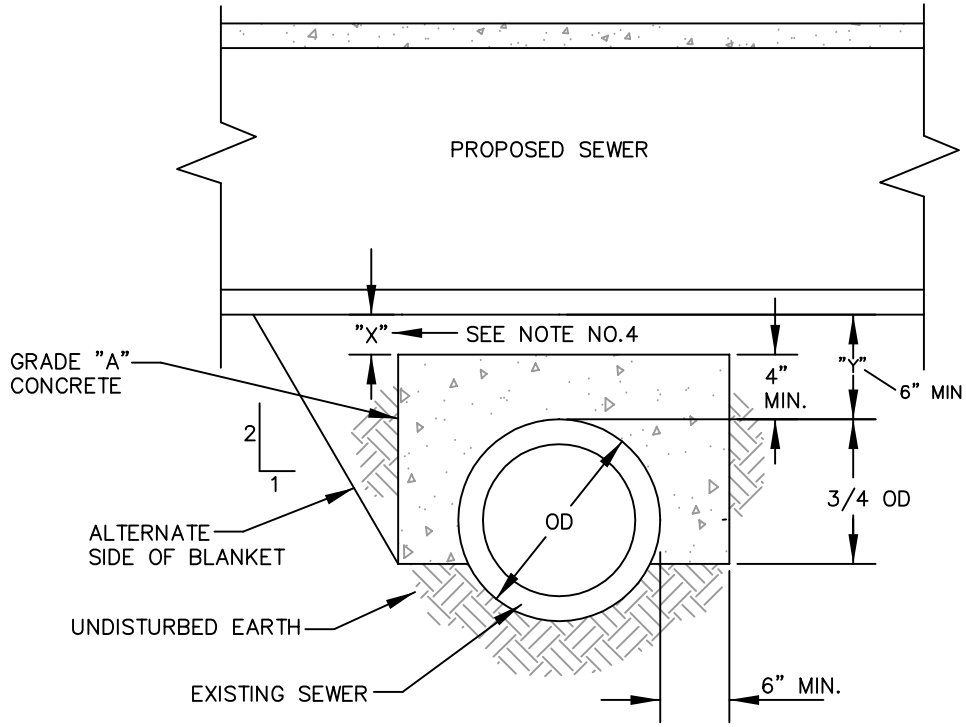

GENERAL NOTES:

1. CONCRETE BLANKET SHALL BE INSTALLED OVER EXISTING SEWER WITH DIAMETERS (Do) FROM 4" TO 24" WHEN "Y" IS LESS THAN 18" OR WHEN ORDERED BY THE ENGINEER.

2. THE BLANKETING SHALL EXTEND ACROSS THE FULL WIDTH OF TRENCH EXCAVATION.

3. UNLESS OTHERWISE DIRECTED BY THE ENGINEER, CONCRETE BLANKET SHALL BE PLACED AT LEAST 24 HOURS BEFORE THE PROPOSED SEWER IS PLACED.

4. WHERE PIPE CROSSES OVER AN EXISTING SEWER, "X" EQUAL TO A MINIMUM OF 1/12 O.D. (OUTSIDE DIAMETER) OF THE CROSSING PIPE SHALL BE PROVIDED FOR BEDDING MATERIAL WHERE POSSIBLE. OTHERWISE THE ENTIRE TOP SURFACE OF THE CONCRETE BLANKET SHALL BE RAISED TO THE CROSSING PIPE (SEE CONCRETE ENCASEMENT DETAIL).

CITY OF GREEN BAY DEPARTMENT OF PUBLIC WORKS ENGINEERING DIVISION	CONCRETE BLANKET	CITY OF GREEN BAY STANDARD SPECIFICATION 2020 EDITION

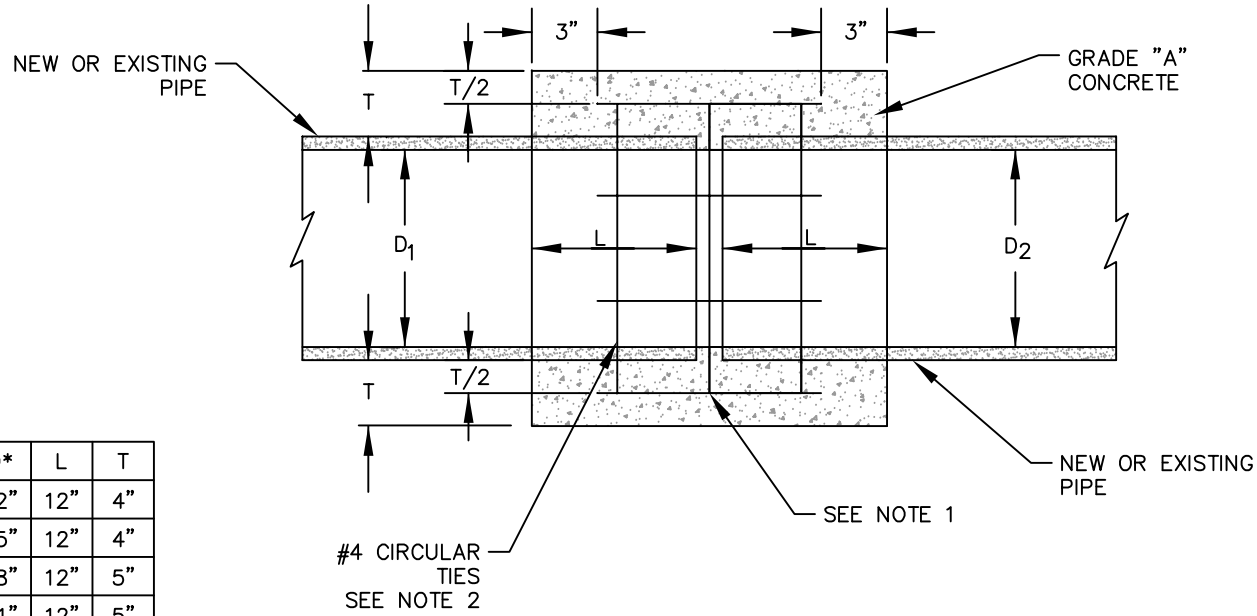

D*	L	T
12"	12"	4"
15"	12"	4"
18"	12"	5"
21"	12"	5"
24"	12"	6"
27"	12"	7"
30"	12"	7"
36"	18"	9"
42"	18"	9"
48"	18"	10"
54"	18"	10"
60"	21"	12"
66"	21"	12"

*WHERE D1 = D2 L&T SHALL BE THOSE OF THE LARGER PIPE

GENERAL NOTES:

1. WHERE THE PIPE IS LESS THAN, OR EQUAL TO, 21 INCHES IN DIAMETER, USE 4x4–4/4 WELDED WIRE FABRIC. WHEN THE PIPE IS 24 INCHES OR LARGER IN DIAMETER, USE #4 REINFORCEMENT AT 12 INCHES CENTER ON CENTER.

2. CIRCULAR TIES SHALL MAINTAIN AN APPROXIMATE SPACING OF 6 INCHES CENTER ON CENTER FOR PIPE DIAMETER 24 INCHES OR LARGER.

3. CONCRETE COLLARS SHALL NOT BE CONSTRUCTED ON MAIN LINE STORM SEWER UNLESS SHOWN ON THE PLANS OR ORDERED BY THE ENGINEER.

4. WHEN THE PIPE IS 24 INCHES OR LARGER, A REMOVABLE INTERIOR FORM SHALL BE USED OR THE INTERIOR JOINT SHALL BE COMPLETELY FILLED WITH MORTAR AND NEATLY PAINTED.

5. ON ALL PIPES WHERE AN INTERIOR FORM IS NOT USED, THE JOINT SHALL BE SEALED AS TO PREVENT ANY CONCRETE FROM ENTERING INTO THE PIPE.

CITY OF GREEN BAY
DEPARTMENT OF PUBLIC WORKS
ENGINEERING DIVISION

CONCRETE COLLAR

CITY OF GREEN BAY
STANDARD SPECIFICATION
2020 EDITION

GENERAL NOTES:

1. CONCRETE ENCASEMENT SHALL BE INSTALLED OVER SEWERS WITH DIAMETERS (OD) FROM 4" TO 24" WHEN "Y" IS LESS THAN 6" OR WHEN ORDERED BY THE ENGINEER.
2. THE ENCASEMENT SHALL MAKE CONTACT WITH THE LOWER 90° OF PIPE PERIMETER OF THE CROSSING PIPE.
3. UNLESS OTHERWISE DIRECTED BY THE ENGINEER, CONCRETE BLANKET SHALL BE PLACED AT LEAST 24 HOURS BEFORE THE PIPE IS PLACED.

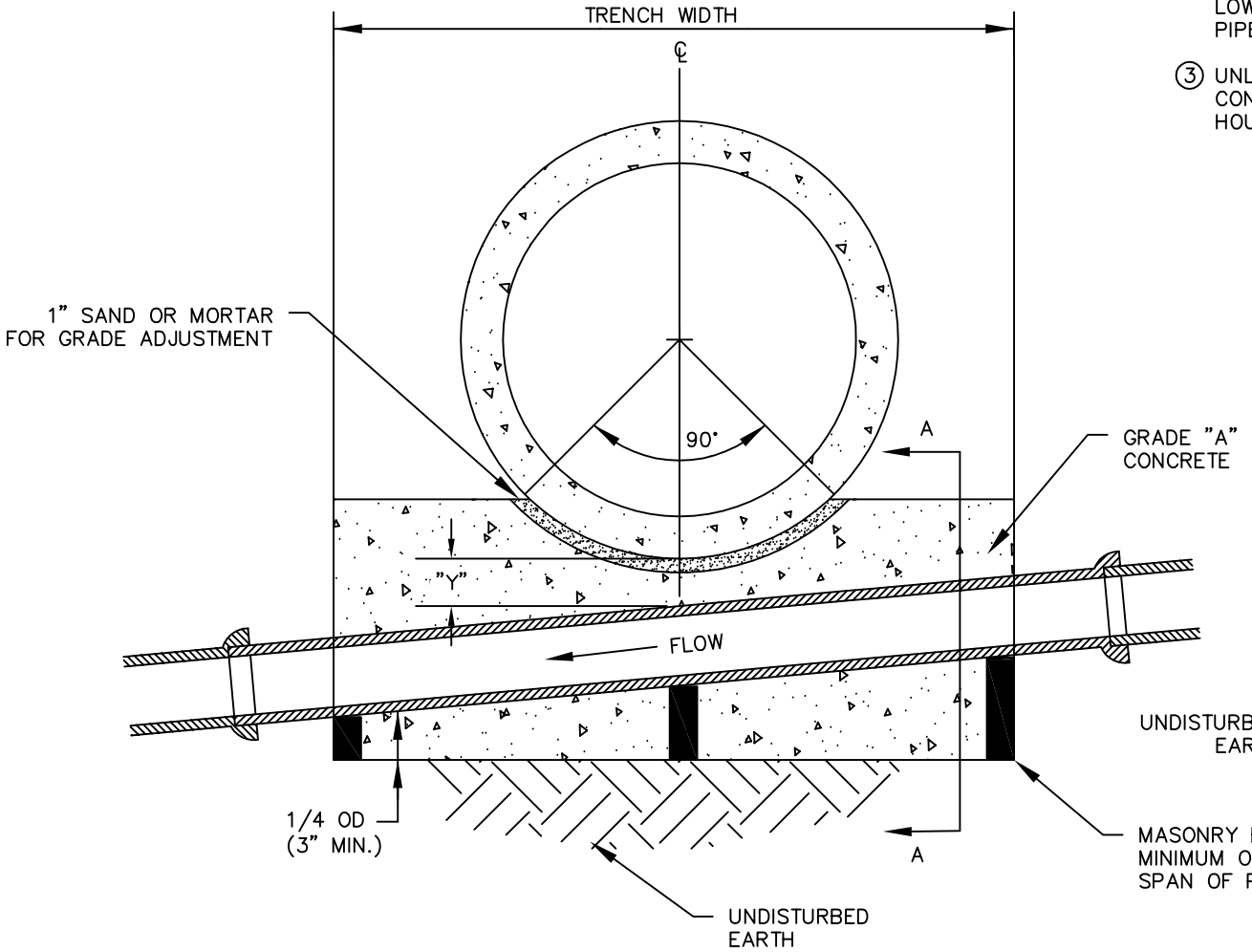

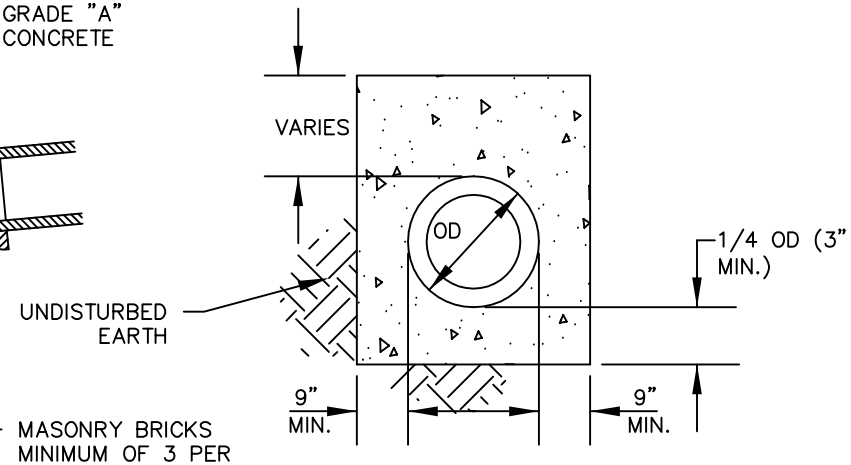

SECTION A–A

CITY OF GREEN BAY DEPARTMENT OF PUBLIC WORKS ENGINEERING DIVISION	CONCRETE ENCASEMENT	CITY OF GREEN BAY STANDARD SPECIFICATION 2020 EDITION

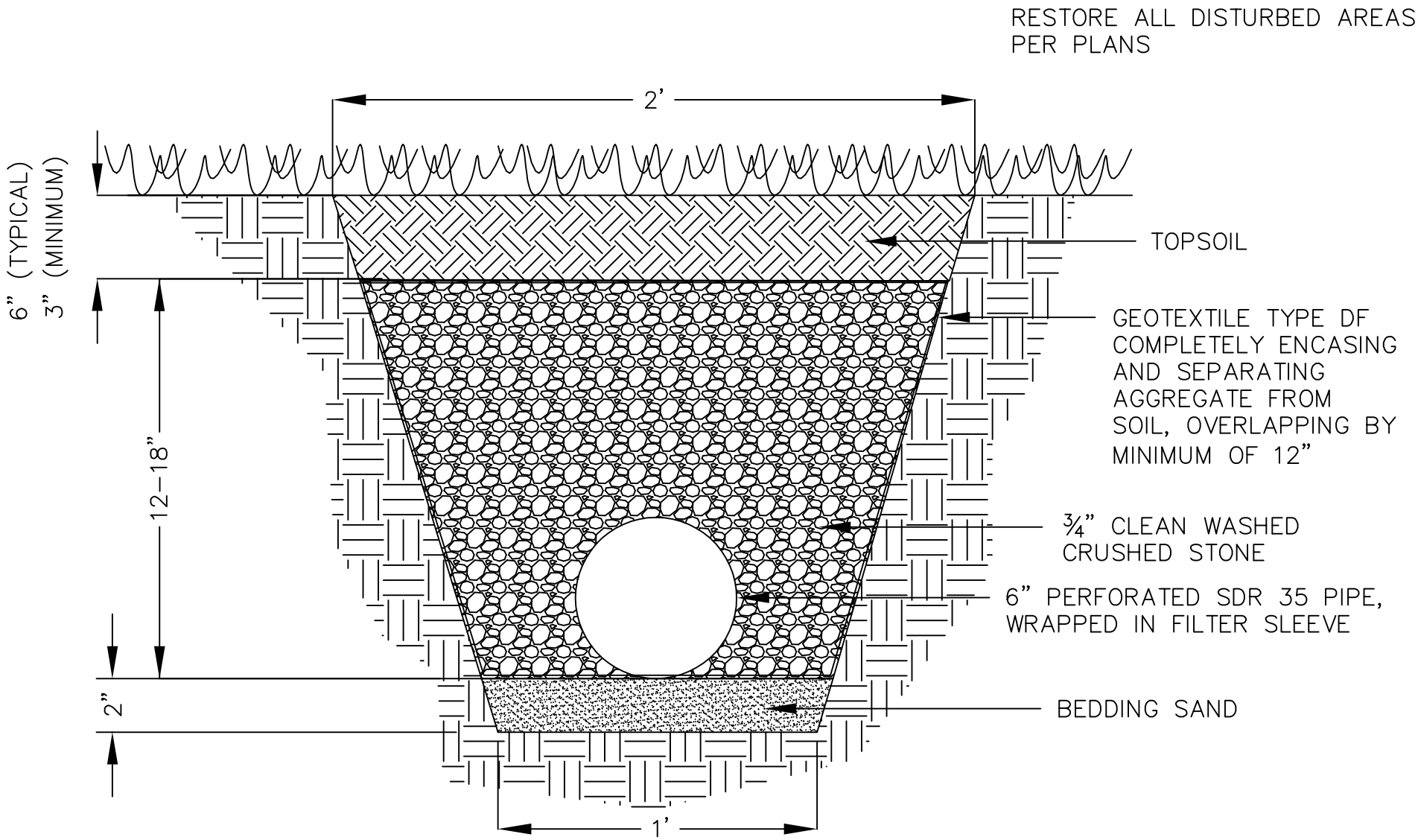

CITY OF GREEN BAY
DEPARTMENT OF PUBLIC WORKS
ENGINEERING DIVISION

DRAIN TILE

CITY OF GREEN BAY
STANDARD SPECIFICATION
2020 EDITION

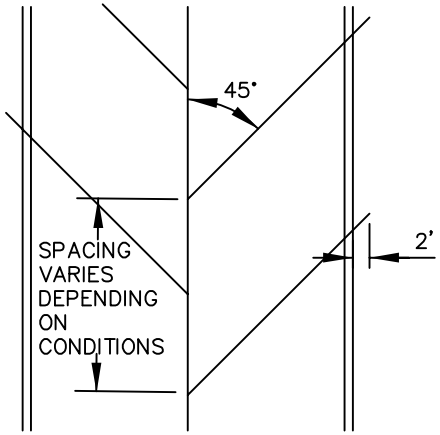

TYPICAL TOP VIEW
FOR ROADWAY SECTION

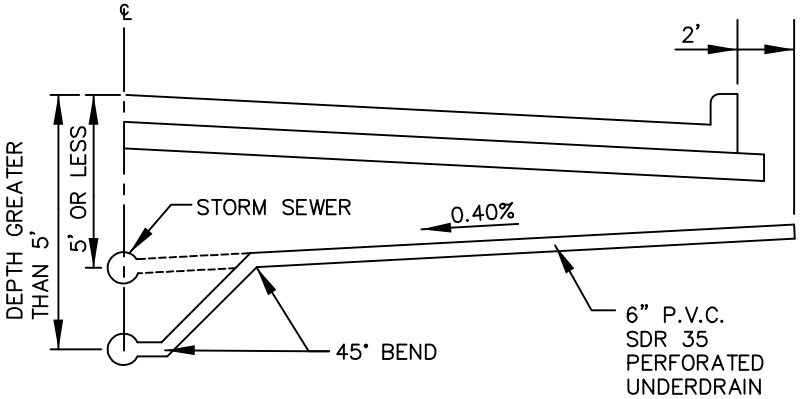

TYPICAL ROADWAY SECTION

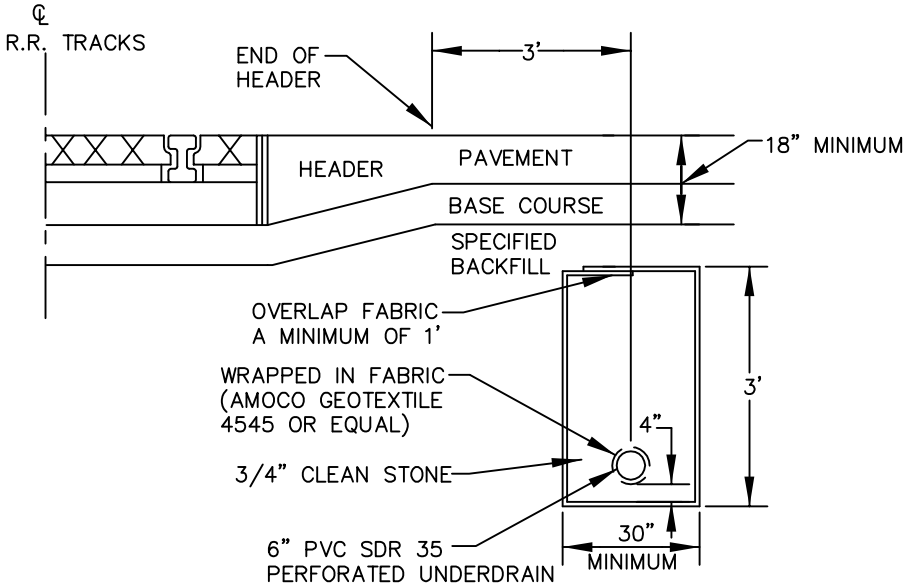

TYPICAL RAILROAD SECTION

CITY OF GREEN BAY DEPARTMENT OF PUBLIC WORKS ENGINEERING DIVISION	6" UNDERDRAIN	CITY OF GREEN BAY STANDARD SPECIFICATION 2020 EDITION

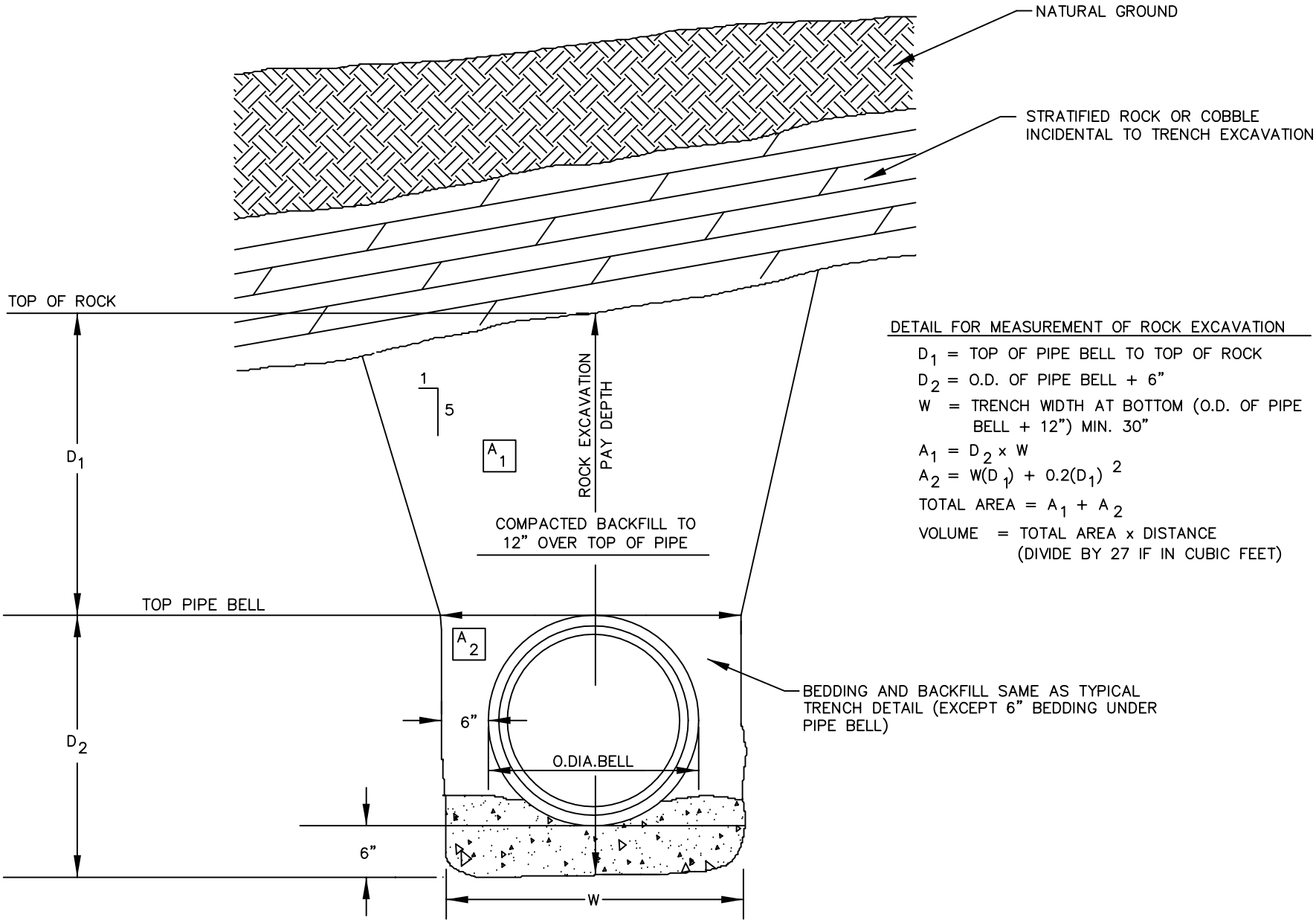

DETAIL FOR MEASUREMENT OF ROCK EXCAVATION

D_1 = TOP OF PIPE BELL TO TOP OF ROCK

D_2 = O.D. OF PIPE BELL + 6"

W = TRENCH WIDTH AT BOTTOM (O.D. OF PIPE BELL + 12") MIN. 30"

$A_1 = D_2 \times W$

$A_2 = W(D_1) + 0.2(D_1)^2$

TOTAL AREA = $A_1 + A_2$

VOLUME = TOTAL AREA x DISTANCE (DIVIDE BY 27 IF IN CUBIC FEET)

CITY OF GREEN BAY
DEPARTMENT OF PUBLIC WORKS
ENGINEERING DIVISION

ROCK EXCAVATION

CITY OF GREEN BAY
STANDARD SPECIFICATION
2020 EDITION

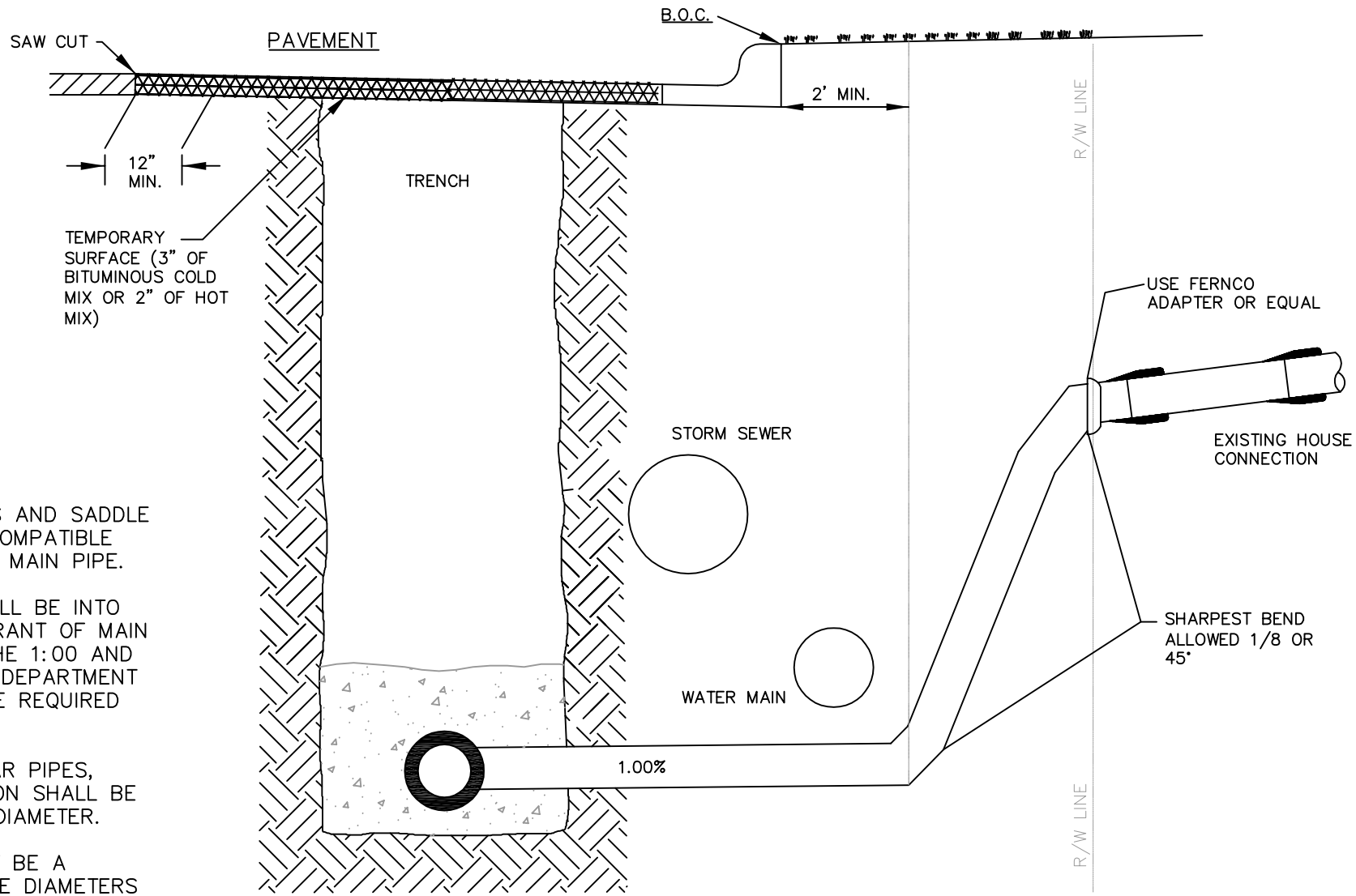

GENERAL NOTES:

1. ALL PLASTIC WYES AND SADDLE WYES SHALL BE COMPATIBLE WITH THE PLASTIC MAIN PIPE.
2. CONNECTIONS SHALL BE INTO THE UPPER QUADRANT OF MAIN PIPES BETWEEN THE 1:00 AND 3:00 POSITIONS. DEPARTMENT APPROVAL WILL BE REQUIRED FOR VARIATIONS.
3. FOR NON-CIRCULAR PIPES, VERTICAL DIMENSION SHALL BE CONSIDERED THE DIAMETER.
4. SEWER MAIN MUST BE A MINIMUM OF 2 PIPE DIAMETERS LARGER THAN THE CONNECTION OR USE OF A FACTORY TEE IS REQUIRED.

CITY OF GREEN BAY DEPARTMENT OF PUBLIC WORKS ENGINEERING DIVISION	TYPICAL HOUSE RE-CONNECTION	CITY OF GREEN BAY STANDARD SPECIFICATION 2020 EDITION

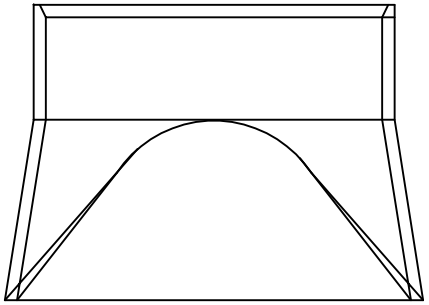

PLAN VIEW

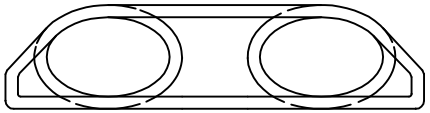

ELLIPTICAL PIPE

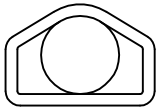

STANDARD PIPE

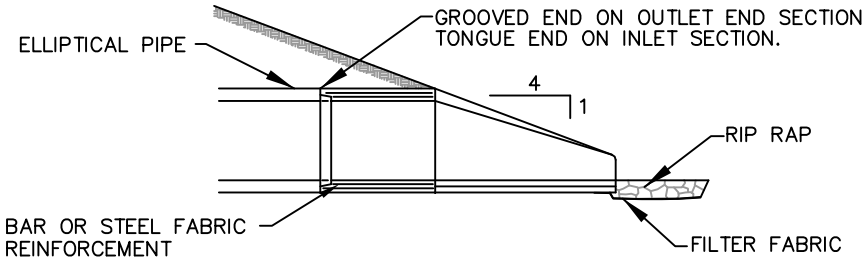

LONGITUDINAL SECTION

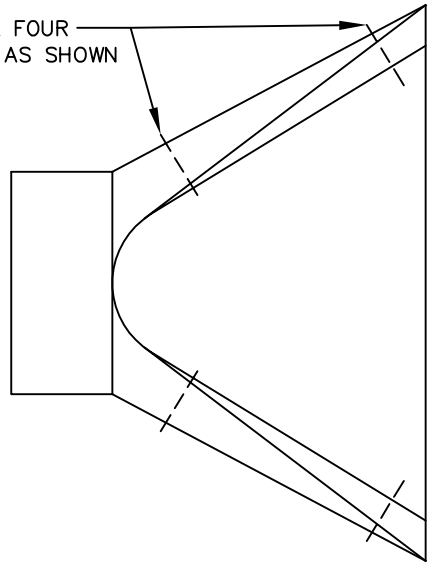

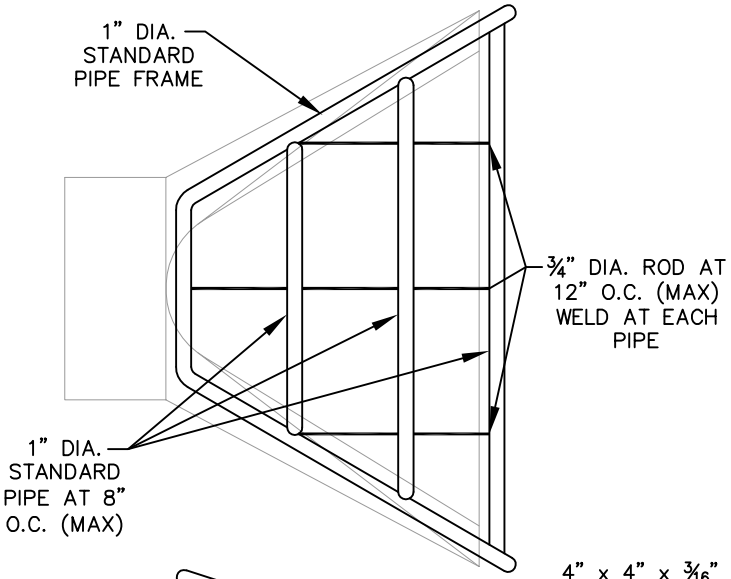

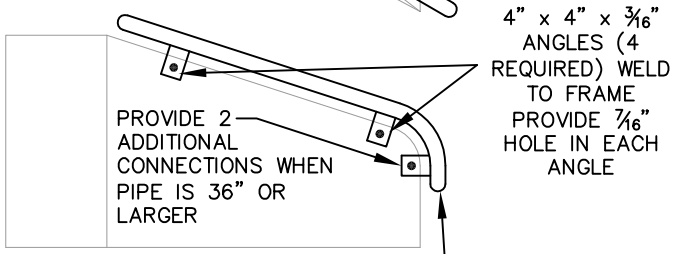

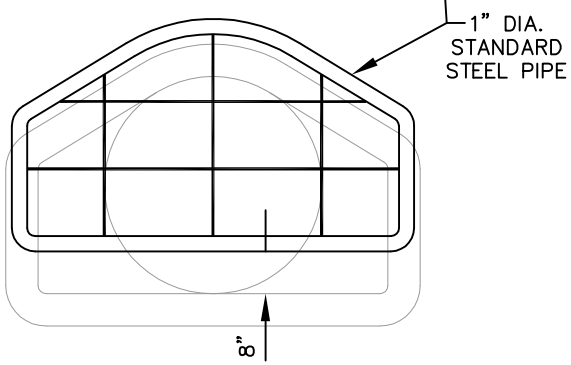

GENERAL NOTE
THE CONTRACTOR SHALL BOLT DOWN THE PIPE GATE TO THE CONCRETE ENDWALL WITH FOUR 3/8" x 6" MACHINE BOLTS WITH NUTS ON INSIDE WALL.

PAINTING SPECIFICATIONS
FOR PAINTING REQUIREMENTS, SEE SECTION 506.2 (b)
STRUCTURAL STEEL PAINT–EPOXY SYSTEM FOR STORM SEWER GRATES/GATES

CITY OF GREEN BAY DEPARTMENT OF PUBLIC WORKS ENGINEERING DIVISION	CONCRETE ENDWALL AND GRATE	CITY OF GREEN BAY STANDARD SPECIFICATION 2020 EDITION

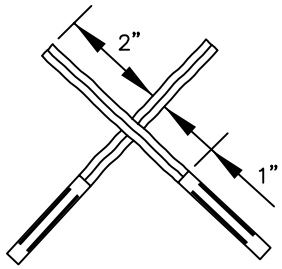

IN–LINE CONNECTION

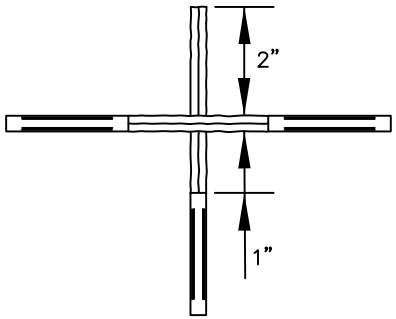

BRANCH CONNECTION

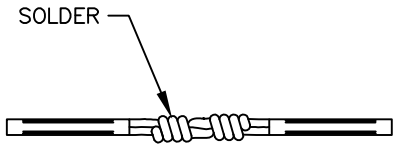

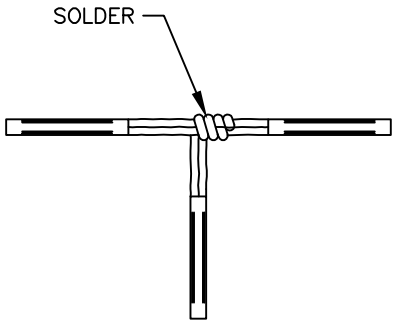

NOTES:

1. CUT OFF INSULATION FROM WIRE AS SHOWN IN THE DRAWING, BUT DO NOT CUT THE COPPER WIRE.
2. LOOP THE WIRE ENDS AT LEAST 4 TIMES ON BOTH SIDES OF THE CONNECTION.
3. USING A PROPANE TORCH, APPLY FLAME DIRECTLY TO JOIN (LOOPS) TO BE SOLDERED.
4. APPLY 62SN OR EQUIVALENT ROSIN CORE SOLDER TO THE SPLICE. SOLDER SHOULD FLOW INTO JOINT.
5. SOLDERING PASTE MUST BE APPLIED TO THE LOOPS BEFORE HEAT IS APPLIED IF ROSIN CORE SOLDER IS NOT USED.
6. WHEN COOLED, COVER SPLICE WITH 3M SCOTCHFILL™ ELECTRICAL INSULATION PUTTY OR EQUIVALENT. THEN COAT THE PUTTY WITH 3M SCOTCHKOTE™ ELECTRICAL COATING OR EQUIVALENT.

CITY OF GREEN BAY DEPARTMENT OF PUBLIC WORKS ENGINEERING DIVISION	TRACER WIRE SPLICE CONNECTION	CITY OF GREEN BAY STANDARD SPECIFICATION 2020 EDITION

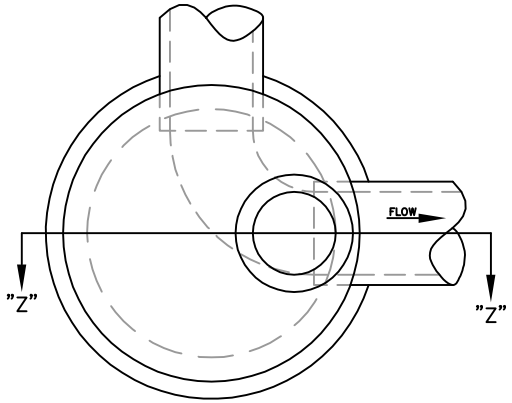

GENERAL NOTES:
NEW REINFORCED CONCRETE MANHOLE SECTIONS SHALL MEET ASTM C-478

NEW MANHOLE SECTIONS SHALL BE REINFORCED, PRE-CAST CONCRETE

STEPS ARE PROHIBITED IN ALL MANHOLE SECTIONS

ALL MANHOLES TO BE REMOVED AND REPLACED SHALL BE TOTALLY REMOVED AND REPLACED INCLUDING FINAL ADJUSTMENT AND CASTING REPLACEMENT

SALVAGED CASTING TO BE RETURNED TO THE CITY

STEPS ARE PROHIBITED IN ALL MANHOLES

MANHOLE INFORMATION KEY						
A	B	C	D	E	F	G
48"	5"	8"	68"	12"	0.12	8"
60"	6"	10"	80"	15"	0.17	10"
72"	7"	10"	96"	16"	0.18	10"
96"	9"	12"	126"	17"	0.24	12"

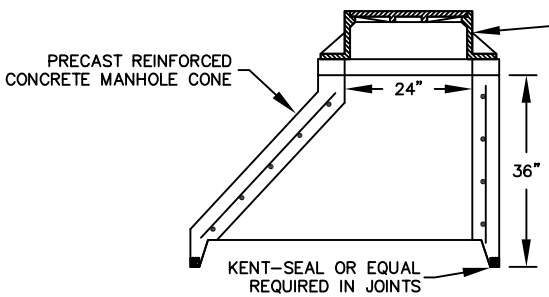

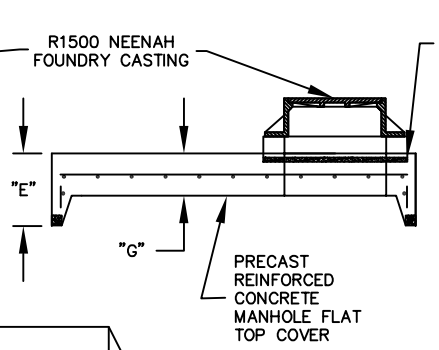

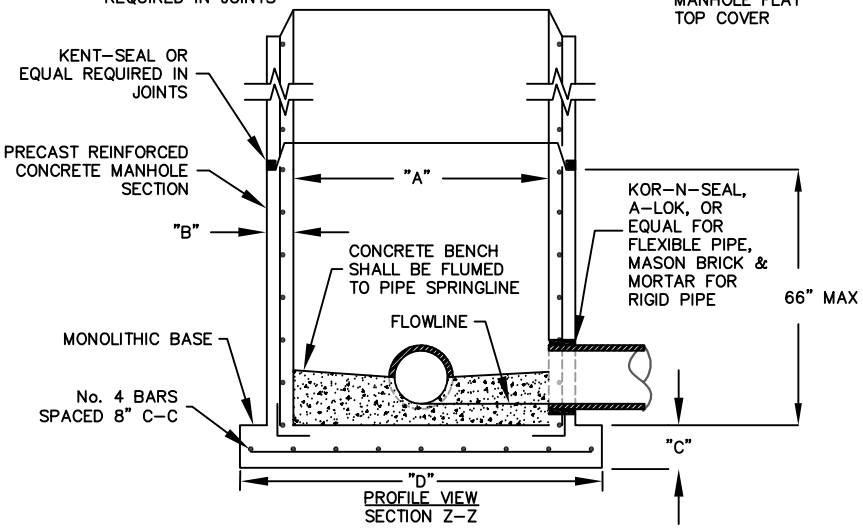

PROFILE VIEW
SECTION Z-Z

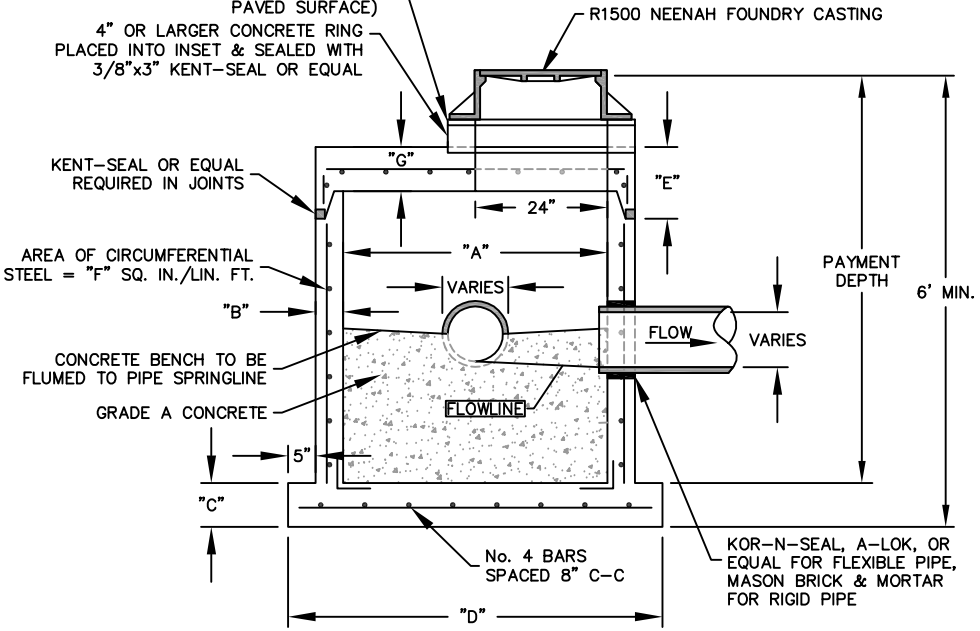

PROFILE VIEW
SECTION Z-Z
SHALLOW MANHOLE

CITY OF GREEN BAY
DEPARTMENT OF PUBLIC WORKS
ENGINEERING DIVISION

MANHOLE 48" TO 96" DIAMETER
AND SHALLOW MANHOLE
WITH FLAT TOP

CITY OF GREEN BAY
STANDARD SPECIFICATION
2020 EDITION

GENERAL NOTES:

NEW REINFORCED CONCRETE MANHOLE SECTIONS SHALL MEET ASTM C-478

NEW MANHOLE SECTIONS SHALL BE REINFORCED, PRE-CAST CONCRETE

STEPS ARE PROHIBITED IN ALL MANHOLE SECTIONS

REINFORCING BARS TO BE CUT AS FLUSH AS POSSIBLE AT PIPE OPENINGS WITHOUT DAMAGING INTEGRITY OF MANHOLE OR PIPE

WHEN X IS LESS THAN 1.5', USE 8" ADJUSTMENT & CASTING WITH 36" DIA. x 2" CHANNEL CAST IN TOP OF TOP SLAB

WHEN X IS BETWEEN 1.5' & 4', USE 48" FLAT TOP WITH 58" DIA. x 2" CHANNEL CAST IN TOP OF SLAB

WHEN X IS GREATER THAN 4', USE TYPE A MANHOLE CONE WITH 58" DIA. x 2" CHANNEL CAST IN TOP OF SLAB

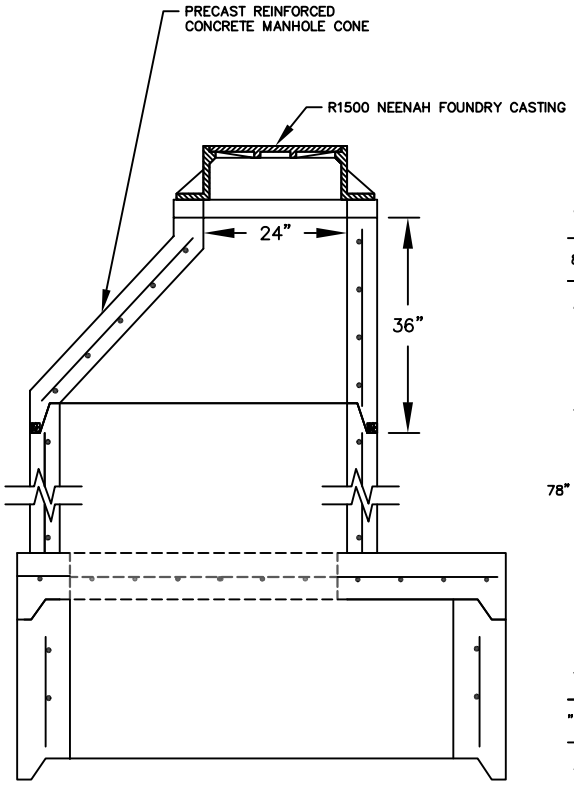

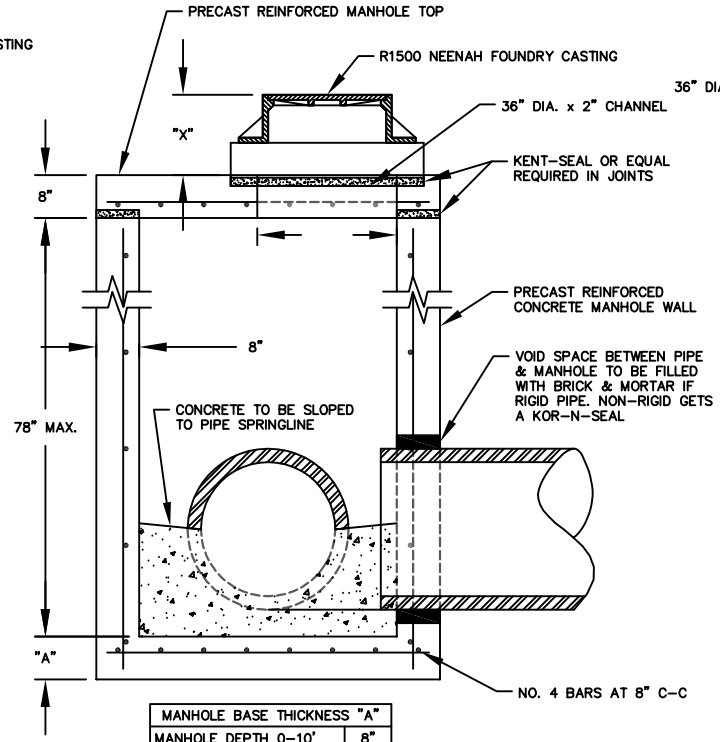

MANHOLE BASE THICKNESS "A"	
MANHOLE DEPTH 0-10'	8"
MANHOLE DEPTH 10'-18'	10"
MANHOLE DEPTH OVER 18'	12"

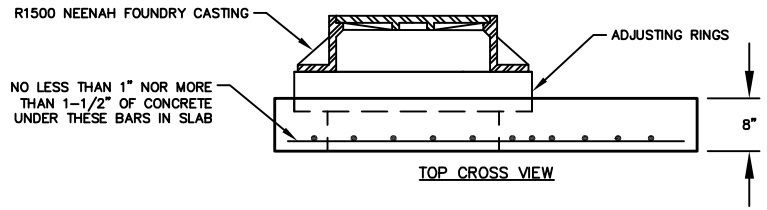

TOP CROSS VIEW

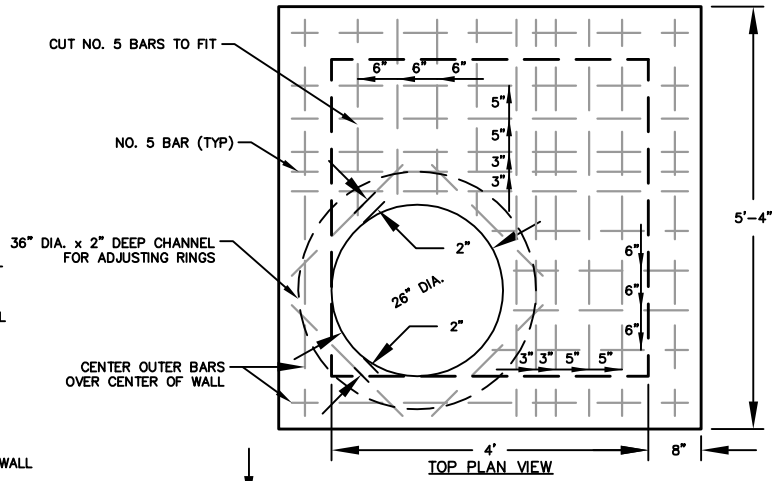

TOP PLAN VIEW

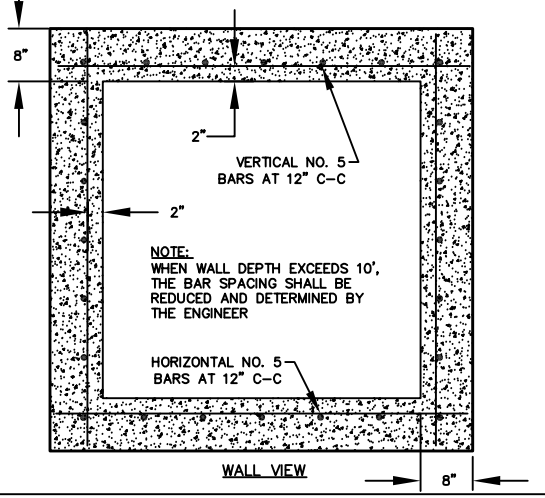

WALL VIEW

CITY OF GREEN BAY
DEPARTMENT OF PUBLIC WORKS
ENGINEERING DIVISION

TYPE "B" MANHOLE
(4'X4' INSIDE DIMENSIONS)
(OR 60" DIAMETER)

CITY OF GREEN BAY
STANDARD SPECIFICATION
2020 EDITION

GENERAL NOTES:

NEW REINFORCED CONCRETE MANHOLE SECTIONS SHALL MEET ASTM C-478

NEW MANHOLE SECTIONS SHALL BE REINFORCED, PRE-CAST CONCRETE

STEPS ARE PROHIBITED IN ALL MANHOLE SECTIONS

REINFORCING BARS TO BE CUT AS FLUSH AS POSSIBLE AT PIPE OPENINGS WITHOUT DAMAGING INTEGRITY OF MANHOLE OR PIPE

WHEN X IS LESS THAN 1.5', USE 8" ADJUSTMENT & CASTING WITH 36" DIA. x 2" CHANNEL CAST IN TOP OF TOP SLAB

WHEN X IS BETWEEN 1.5' & 4', USE 48" FLAT TOP WITH 58" DIA. x 2" CHANNEL CAST IN TOP OF SLAB

WHEN X IS GREATER THAN 4', USE TYPE A MANHOLE CONE WITH 58" DIA. x 2" CHANNEL CAST IN TOP OF SLAB

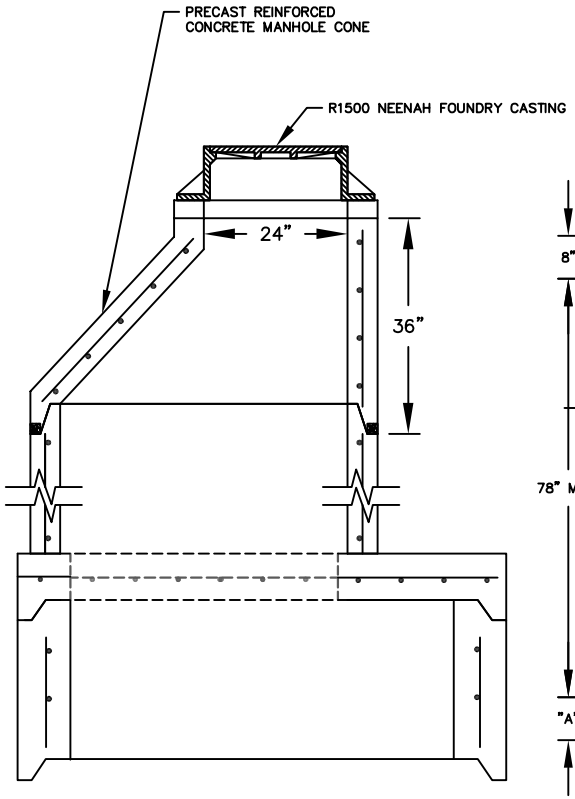

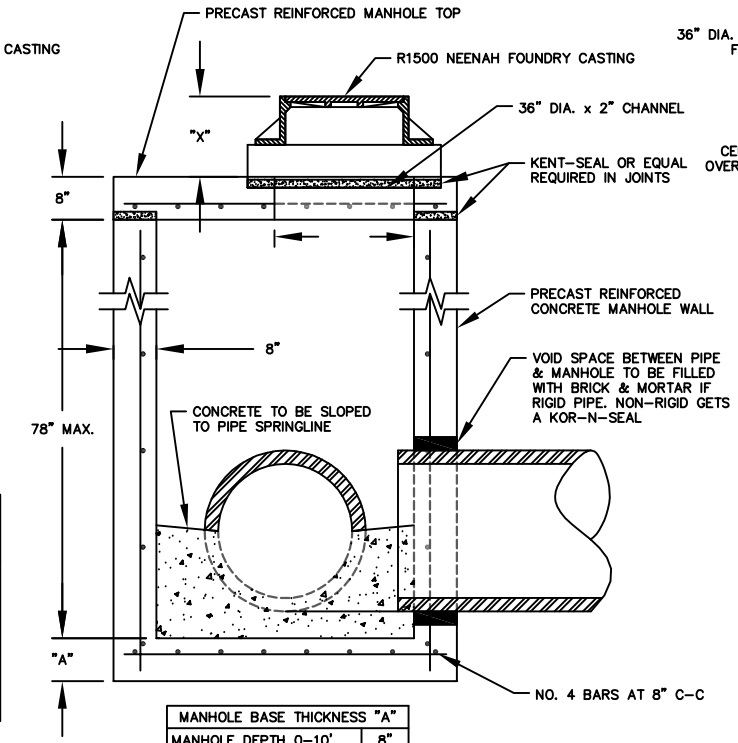

MANHOLE BASE THICKNESS "A"	
MANHOLE DEPTH 0-10'	8"
MANHOLE DEPTH 10'-18'	10"
MANHOLE DEPTH OVER 18'	12"

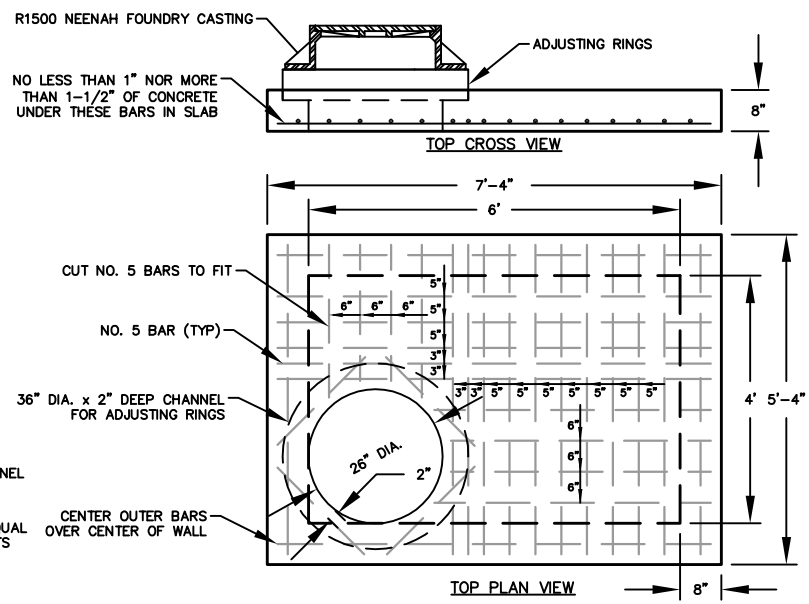

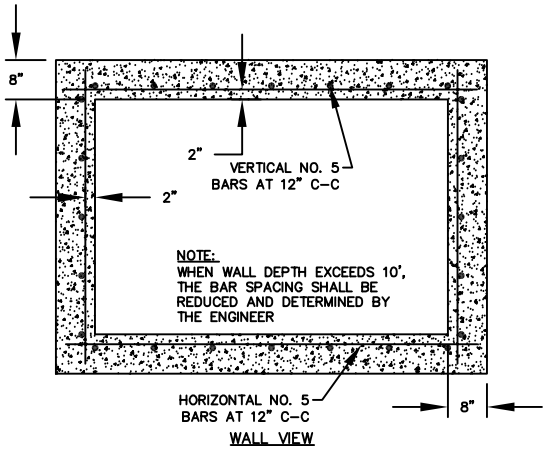

CITY OF GREEN BAY
DEPARTMENT OF PUBLIC WORKS
ENGINEERING DIVISION

TYPE "C" MANHOLE
(4'x6' INSIDE DIMENSION)
(OR 72" DIAMETER)

CITY OF GREEN BAY
STANDARD SPECIFICATION
2020 EDITION

GENERAL NOTES:

NEW REINFORCED CONCRETE MANHOLE SECTIONS SHALL MEET ASTM C-478

NEW MANHOLE SECTIONS SHALL BE REINFORCED, PRE-CAST CONCRETE

STEPS ARE PROHIBITED IN ALL MANHOLE SECTIONS

REINFORCING BARS TO BE CUT AS FLUSH AS POSSIBLE AT PIPE OPENINGS WITHOUT DAMAGING INTEGRITY OF MANHOLE OR PIPE

WHEN X IS LESS THAN 1.5', USE 8" ADJUSTMENT & CASTING WITH 36" DIA. x 2" CHANNEL CAST IN TOP OF TOP SLAB

WHEN X IS BETWEEN 1.5' & 4', USE 48" FLAT TOP WITH 58" DIA. x 2" CHANNEL CAST IN TOP OF SLAB

WHEN X IS GREATER THAN 4', USE TYPE A MANHOLE CONE WITH 58" DIA. x 2" CHANNEL CAST IN TOP OF SLAB

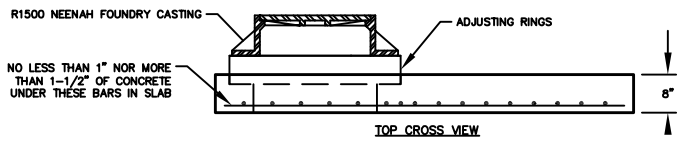

TOP CROSS VIEW

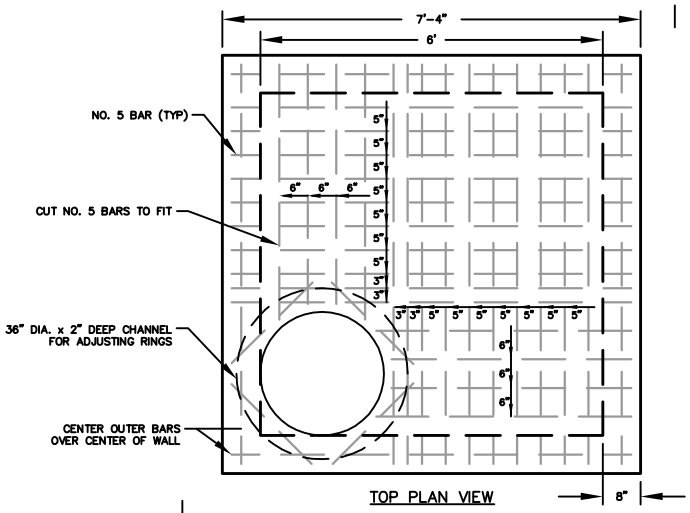

TOP PLAN VIEW

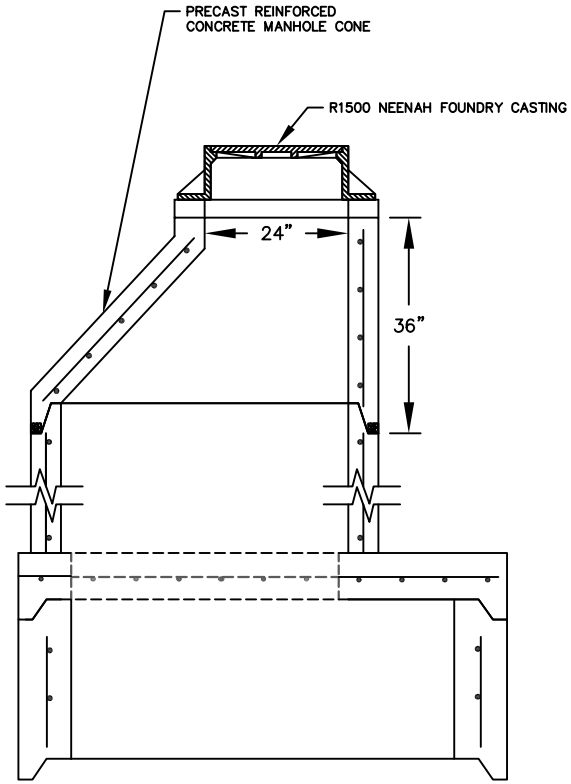

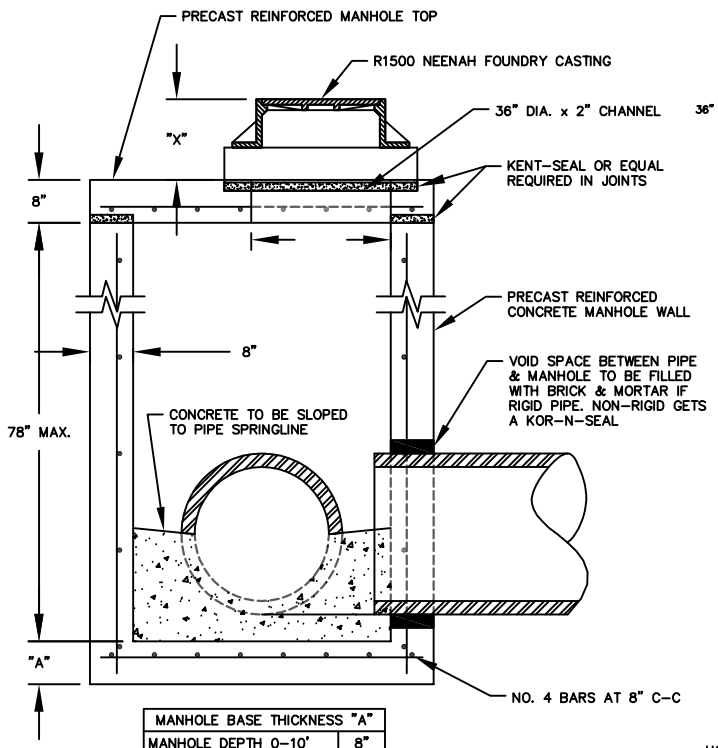

MANHOLE BASE THICKNESS "A"	
MANHOLE DEPTH 0-10'	8"
MANHOLE DEPTH 10'-18'	10"
MANHOLE DEPTH OVER 18'	12"

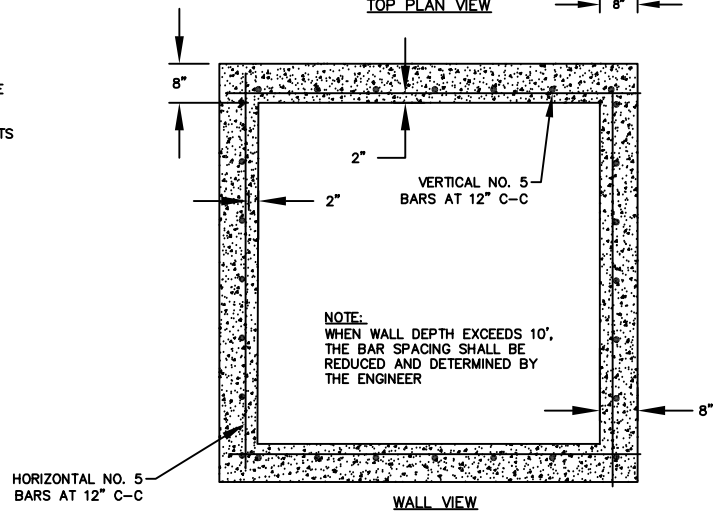

WALL VIEW

CITY OF GREEN BAY
DEPARTMENT OF PUBLIC WORKS
ENGINEERING DIVISION

TYPE "D" MANHOLE
(6'X6' INSIDE DIMENSION)
(OR 84" OR LARGER DIA.)

CITY OF GREEN BAY
STANDARD SPECIFICATION
2020 EDITION

NOTES:

WHEN REBAR IS IN THE WAY OF PIPE OPENINGS, CUT OFF BARS AT THE EDGES OF THE OPENING WITHOUT ALTERING THEIR POSITION, DO NOT BEND BARS AROUND PIPE. PROVIDE ADDITIONAL DIAGONAL BARS AROUND PERIMETER OF PIPE OPENING.

EACH VERTICAL No. 5 BAR SHALL HAVE A RIGHT ANGLE BAR EXTENDING INTO THE BASE 3"

HORIZONTAL BARS SHALL END 2" SHORT OF OUTSIDE WALLS

"A" = 10' RADIUS TO OUTSIDE DIAMETER OF PIPE, ALL PIPE SIZES
"B" = PIPE WALL THICKNESS
"C" = INSIDE DIAMETER OF PIPE (42" OR LARGER)
"D" = VARIES WITH PIPE SIZE
"E" = VARIES WITH PIPE SIZE
"T" = 8" WHEN MANHOLE DEPTH IS LESS THAN 10'
10" WHEN MANHOLE DEPTH IS 10' TO 18'
12" WHEN MANHOLE DEPTH IS MORE THAN 18'

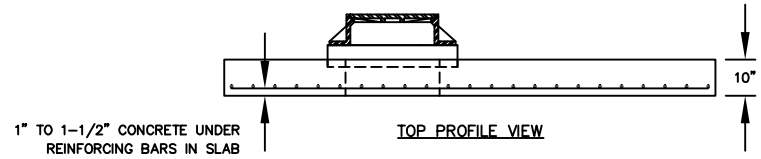

TOP PROFILE VIEW

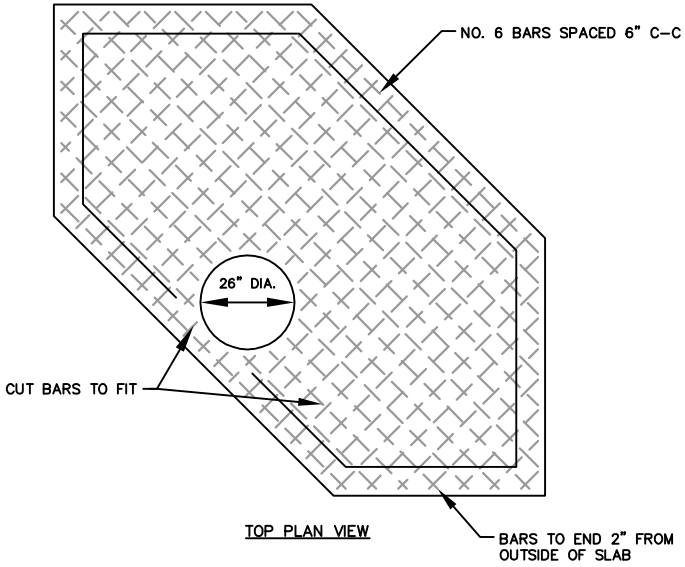

TOP PLAN VIEW

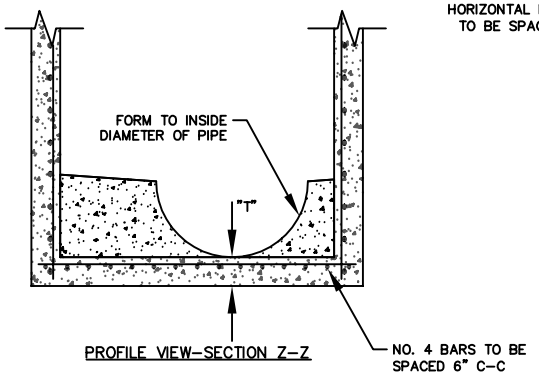

PROFILE VIEW-SECTION Z-Z

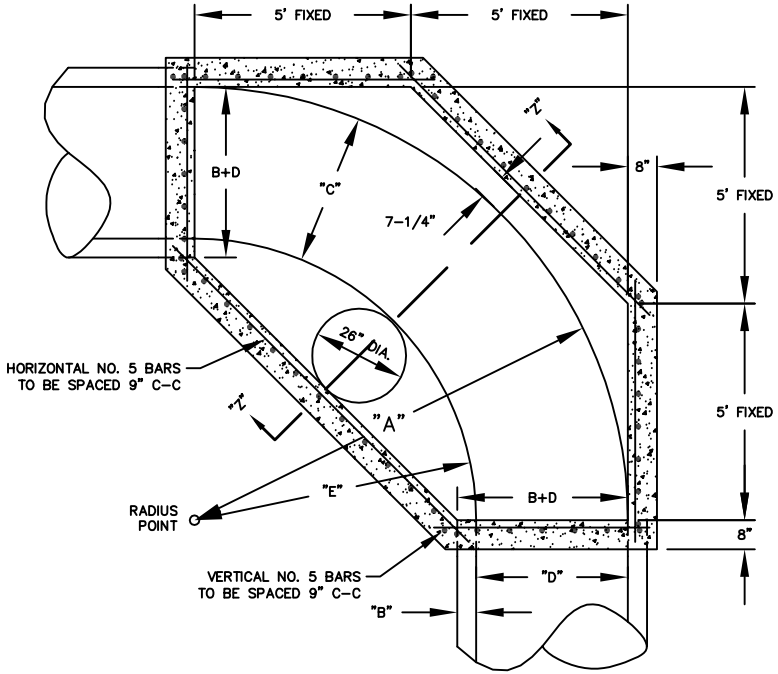

PLAN VIEW

CITY OF GREEN BAY
DEPARTMENT OF PUBLIC WORKS
ENGINEERING DIVISION

TYPE "E" MANHOLE

CITY OF GREEN BAY
STANDARD SPECIFICATION
2020 EDITION

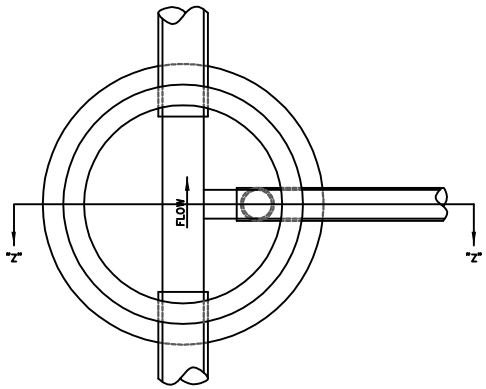

PLAN VIEW

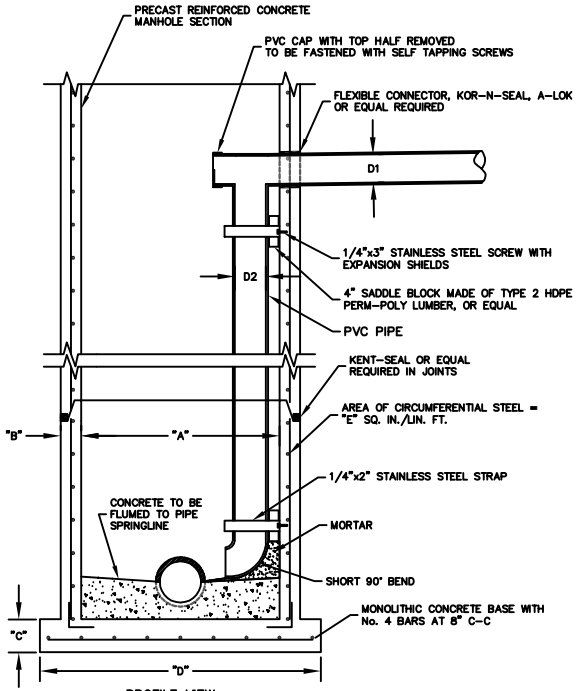

PROFILE VIEW
SECTION Z-Z

GENERAL NOTES:

NEW REINFORCED CONCRETE MANHOLE SECTIONS SHALL MEET ASTM C-478

NEW MANHOLE SECTIONS SHALL BE REINFORCED, PRE-CAST CONCRETE

STEPS ARE PROHIBITED IN ALL MANHOLE SECTIONS

INSIDE DROP PVC SHALL BE STRAPPED EVERY 10 FEET AND AT EACH END OF PIPE BY THE JOINT

FLOWLINE OF DROP TO BE AT THE SAME ELEVATION AS SPRING LINE OF MAIN

INSIDE DROP MANHOLE MUST BE APPROVED BY ENGINEER PRIOR TO USE

MANHOLE INFORMATION KEY				
A	B	C	D	E
48"	5"	8"	68"	0.12
60"	6"	10"	80"	0.17
72"	7"	10"	96"	0.18
96"	9"	12"	126"	0.24

PIPE SCHEDULE FOR DROP MANHOLE	
LATERAL SEWER DIA. (D1)	DROP PIPE DIA. (D2)
4	6
6	6
8	8
10	8
12	10
15	10
18	12
21	15
24	18

GENERAL NOTES:

NEW REINFORCED CONCRETE MANHOLE SECTIONS SHALL MEET ASTM C-478

NEW MANHOLE SECTIONS SHALL BE REINFORCED, PRE-CAST CONCRETE

STEPS ARE PROHIBITED IN ALL MANHOLE SECTIONS

ALL STANDARD TYPE "A" SPECIFICATIONS APPLY TO OUTSIDE DROP MANHOLES

WHENEVER "X" IS GREATER THAN 2' AN OUTSIDE DROP MUST BE CONSTRUCTED AS SHOWN

WHEN POURING A CONCRETE DROP ON AN EXISTING MANHOLE USE A FIBEROUS TUBE FORM WITH A MIN. OF 6" DISTANCE AROUND PIPE. POUR CONCRETE INSIDE TUBE AND VIBRATE OR ROD CONCRETE IN 2' LIFTS FROM MANHOLE BASE TO BOTTOM OF SEWER MAIN

PRECAST DROP MANHOLES ONLY AVAILABLE FOR 8" & 10" PVC

PRE-CAST DROP SHOWN ON 48" MANHOLE, DROP ALSO AVAILABLE ON 60", 72", AND 96" MANHOLES

PIPE SCHEDULE FOR DROP MANHOLE	
LATERAL SEWER DIA. (D1)	DROP PIPE DIA. (D2)
8	8
10	8
12	10
15	10
18	12
21	15
24	18

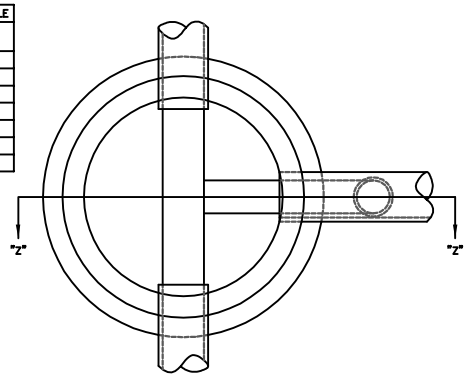

PLAN VIEW

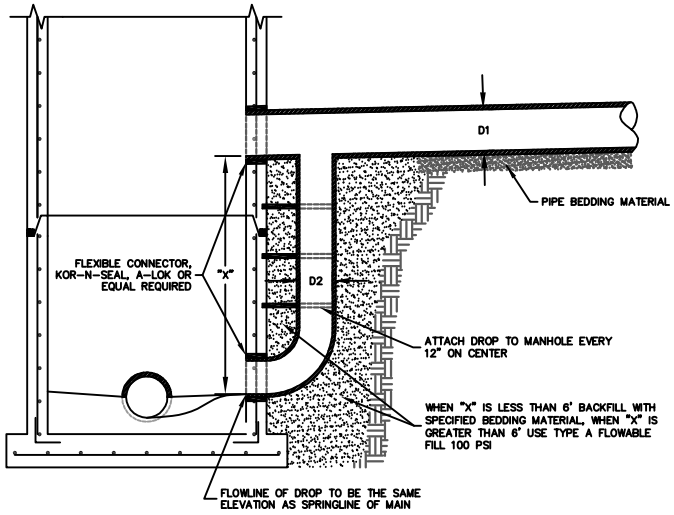

PROFILE VIEW
SECTION Z-Z

CITY OF GREEN BAY
DEPARTMENT OF PUBLIC WORKS
ENGINEERING DIVISION

STANDARD MANHOLE WITH INSIDE DROP AND WITH PRECAST OR POURED CONCRETE OUTSIDE DROP

CITY OF GREEN BAY
STANDARD SPECIFICATION
2020 EDITION

GENERAL NOTES:
NEW REINFORCED CONCRETE MANHOLE SECTIONS SHALL MEET ASTM C-478

NEW MANHOLE SECTIONS SHALL BE REINFORCED, PRE-CAST CONCRETE

STEPS ARE PROHIBITED IN ALL MANHOLE SECTIONS

ALL MANHOLES TO BE RECONSTRUCTED SHALL CONSIST OF SAID MANHOLES BEING RECONSTRUCTED TO THE HEIGHT CALLED OUT ON THE PLAN INCLUDING KENT-SEAL, CONCRETE COLLAR, FINAL ADJUSTMENT, AND CASTING REPLACEMENT

SALVAGED CASTING TO BE RETURNED TO THE CITY

PAYMENT DEPTH TO BE MEASURED FROM TOP OF BLOCK TO TOP OF CASTING

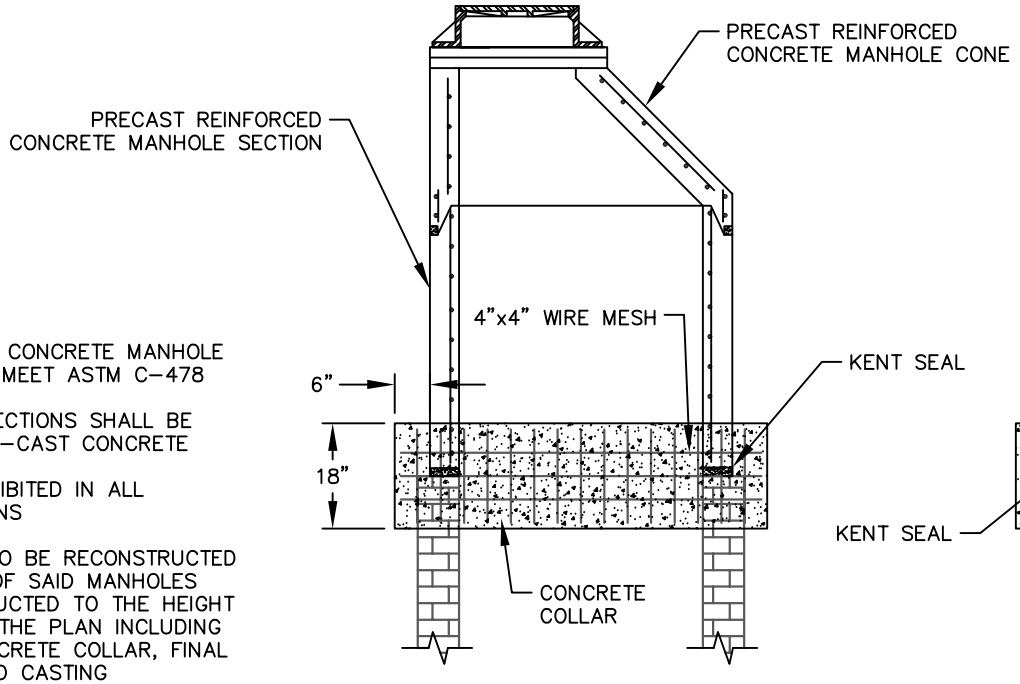

EXISTING MH BLOCKS IN GOOD CONDITION

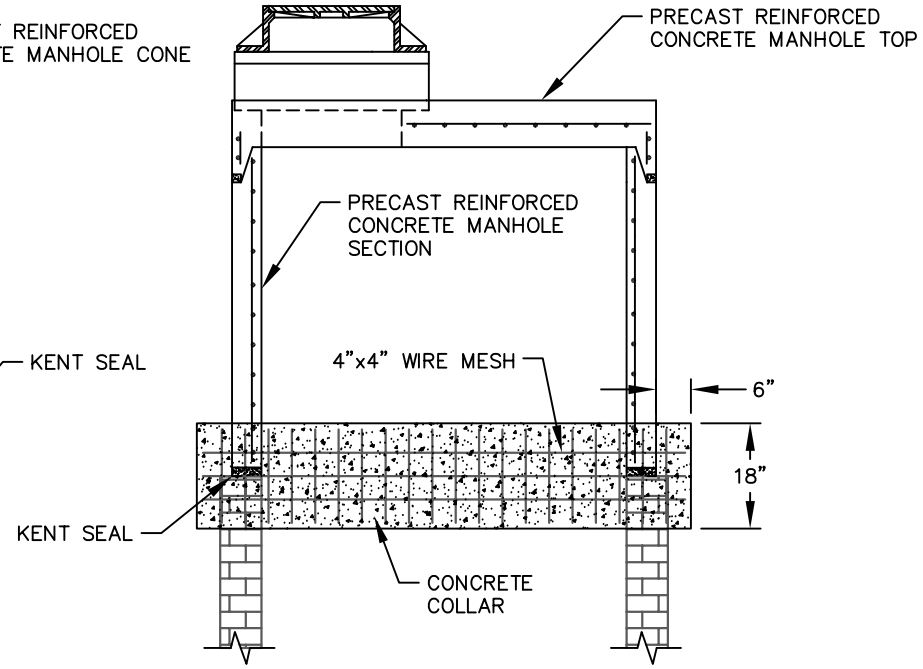

EXISTING MH BLOCKS IN GOOD CONDITION

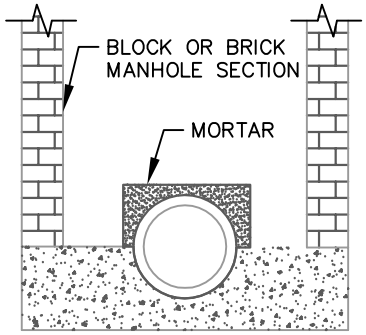

EXISTING CONCRETE BASE IN GOOD CONDITION

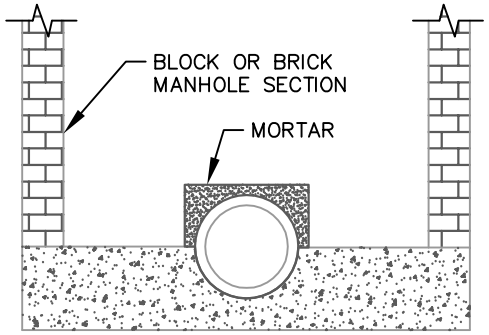

EXISTING CONCRETE BASE IN GOOD CONDITION

CITY OF GREEN BAY
DEPARTMENT OF PUBLIC WORKS
ENGINEERING DIVISION

RECONSTRUCT STANDARD
TYPE "A"
BLOCK MANHOLE

CITY OF GREEN BAY
STANDARD SPECIFICATION
2020 EDITION

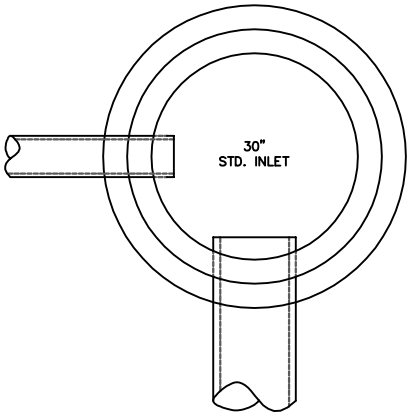

GENERAL NOTES:

1. ALL INLETS TO BE CONSTRUCTED SHALL CONSIST OF SAID INLETS BEING TOTALLY CONSTRUCTED, INCLUDING: BASE, RISER SECTIONS, CASTING, AND FINAL ADJUSTMENT, UNLESS OTHERWISE NOTED.
2. ALL INLETS SHALL MEET ASTM C-478 STANDARDS FOR REINFORCED CONCRETE INLETS.
3. STANDARD INLET CASTINGS SHALL BE NEENAH R-3075 FRAME, GRATE, & CURB BOX. CURB BOX SHALL HAVE THE ENVIRO-CURB LOGO.
4. 6" UNDERDRAIN IN RESIDENTIAL AREAS. INCIDENTAL TO INLET CONSTRUCTION.
5. AN ADDITIONAL 12" STUB SHALL BE REQUIRED IN COMMERCIAL AREAS. COST IS TO BE INCLUDED IN THE BID PRICE OF INLETS.
6. STANDARD INLETS SHALL ALSO MEET ASTM C-76 FOR CLASS III RCCP.
7. SAWCUT AND MORTARING OF CONCRETE PIPE ONLY; ALL OTHER PIPE MATERIALS MUST HAVE A FLEXIBLE CONNECTION.
8. ALL INLETS IN RESIDENTIAL AREAS WILL BE CONSTRUCTED WITH 6-INCH PERFORATED UNDERDRAIN ATTACHED, AS SHOWN.
9. ALL UNDERDRAIN SHALL HAVE SEWER TRACER WIRE.
10. HOLES IN UNDERDRAIN SHOULD FACE DOWNWARD WHEN INSTALLED.

PROFILE VIEW

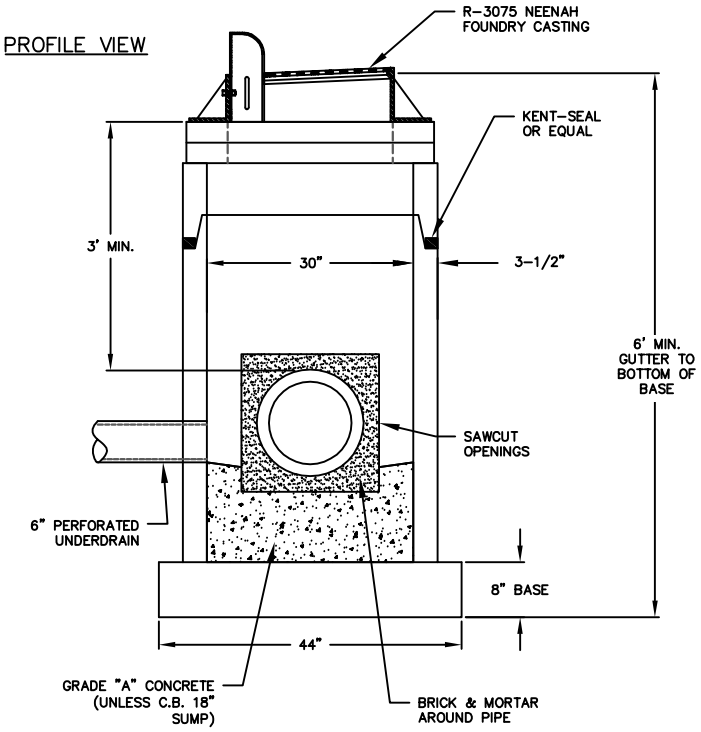

TYPE A STANDARD INLET

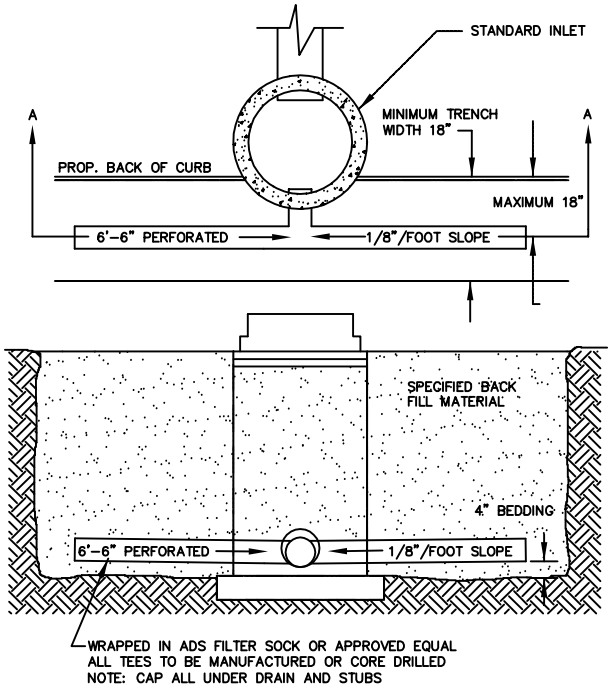

TYPE B STANDARD INLET

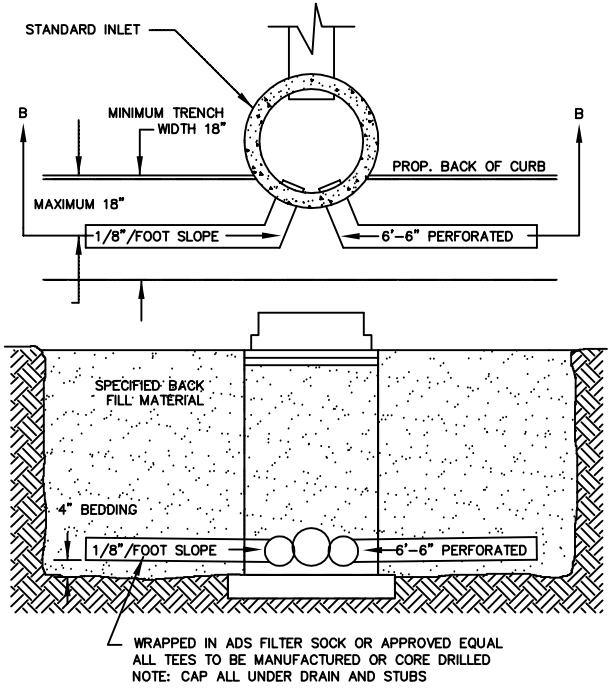

CITY OF GREEN BAY
DEPARTMENT OF PUBLIC WORKS
ENGINEERING DIVISION

STANDARD INLET WITH UNDERDRAIN

CITY OF GREEN BAY
STANDARD SPECIFICATION
2020 EDITION

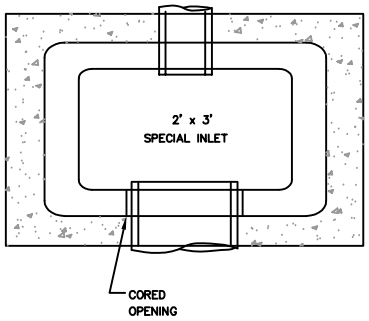

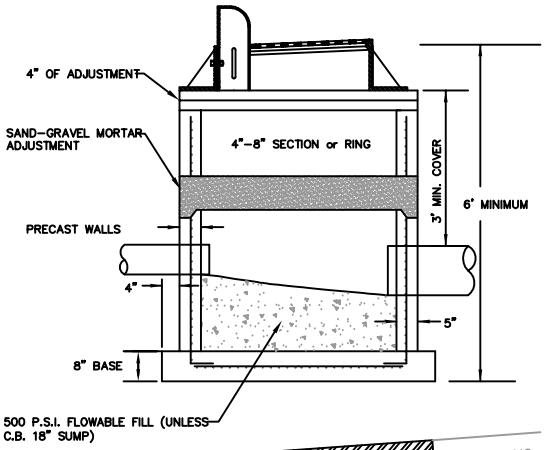

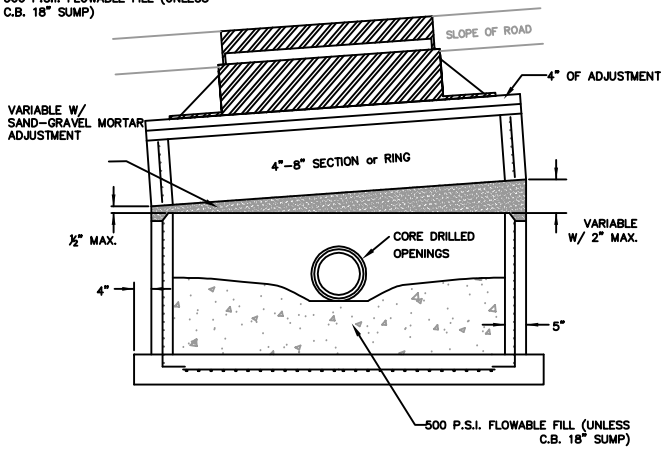

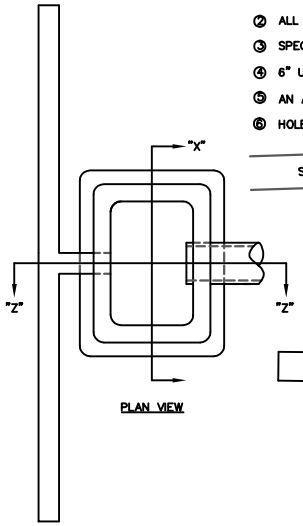

PLAN VIEW

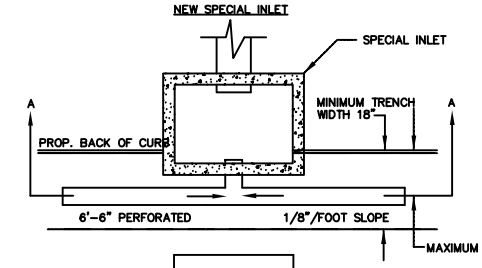

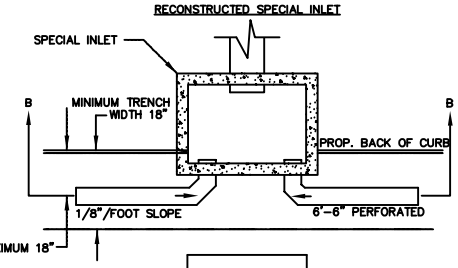

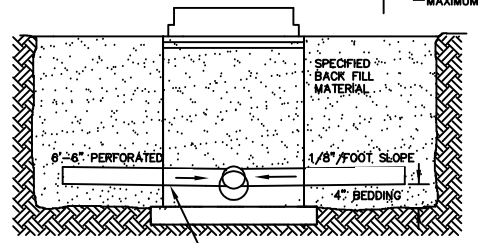

WRAPPED IN ADS FILTER SOCK
OR APPROVED EQUAL

ALL TEES TO BE MANUFACTURED OR CORE DRILLED
NOTE: BULKHEAD ALL UNDER DRAIN AND STUBS

SECTION A-A

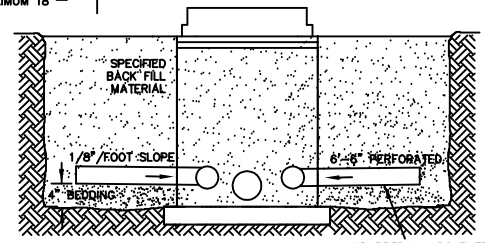

WRAPPED IN ADS FILTER SOCK
OR APPROVED EQUAL

ALL TEES TO BE MANUFACTURED OR CORE DRILLED
NOTE: BULKHEAD ALL UNDER DRAIN AND STUBS

SECTION B-B

GENERAL NOTES:
① ALL INLETS IN RESIDENTIAL AREAS WILL BE CONSTRUCTED WITH 6-INCH PERFORATED UNDERDRAIN ATTACHED, AS SHOWN. AN ADDITIONAL 12" STUB SHALL BE REQUIRED IN COMMERCIAL AREAS. COST IS TO BE INCLUDED IN THE BID PRICE OF INLETS.
② 12" - COMMERCIAL/INDUSTRIAL AREAS MATCH FLOWLINE OF OUTLET

GENERAL NOTES:

① ALL INLETS TO BE REMOVED AND REPLACED SHALL CONSIST OF SAID INLETS BEING TOTALLY REMOVED AND REPLACED, INCLUDING: BASE, RISER SECTIONS, CASTING, AND FINAL ADJUSTMENT, UNLESS OTHERWISE NOTED.

② ALL INLETS SHALL MEET ASTM C-478 STANDARDS FOR REINFORCED CONCRETE INLETS.

③ SPECIAL INLET CASTINGS SHALL BE NEENAH R-3067 FRAME, GRATE, & CURB BOX. CURB BOX SHALL HAVE THE ENVIRO-CURB LOGO.

④ 6" UNDERDRAIN IN RESIDENTIAL AREAS. INCIDENTAL TO INLET CONSTRUCTION.

⑤ AN ADDITIONAL 12" STUB SHALL BE REQUIRED IN COMMERCIAL AREAS.

⑥ HOLES IN UNDERDRAIN SHOULD FACE DOWNWARD WHEN INSTALLED.

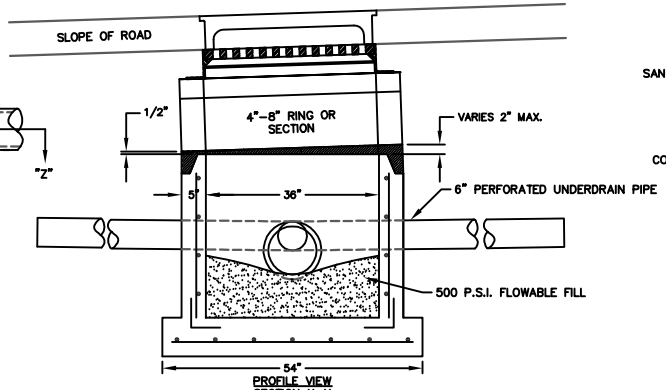

PROFILE VIEW
SECTION X-X

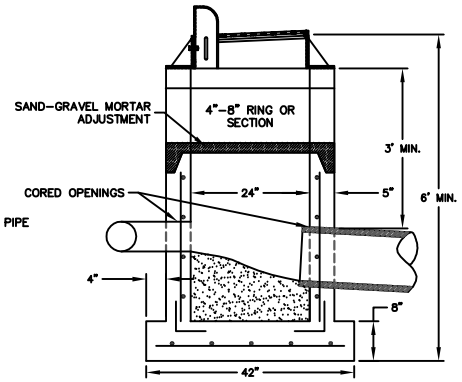

PROILE VIEW
SECTION Z-Z

CITY OF GREEN BAY
DEPARTMENT OF PUBLIC WORKS
ENGINEERING DIVISION

SPECIAL INLET WITH UNDERDRAIN

CITY OF GREEN BAY
STANDARD SPECIFICATION
2020 EDITION

GENERAL NOTES:

1. CONSTRUCT WHEN INLET WALL OVER PIPE WALL
2. CONSTRUCT WHEN INLET WALL ADJACENT TO PIPE WALL

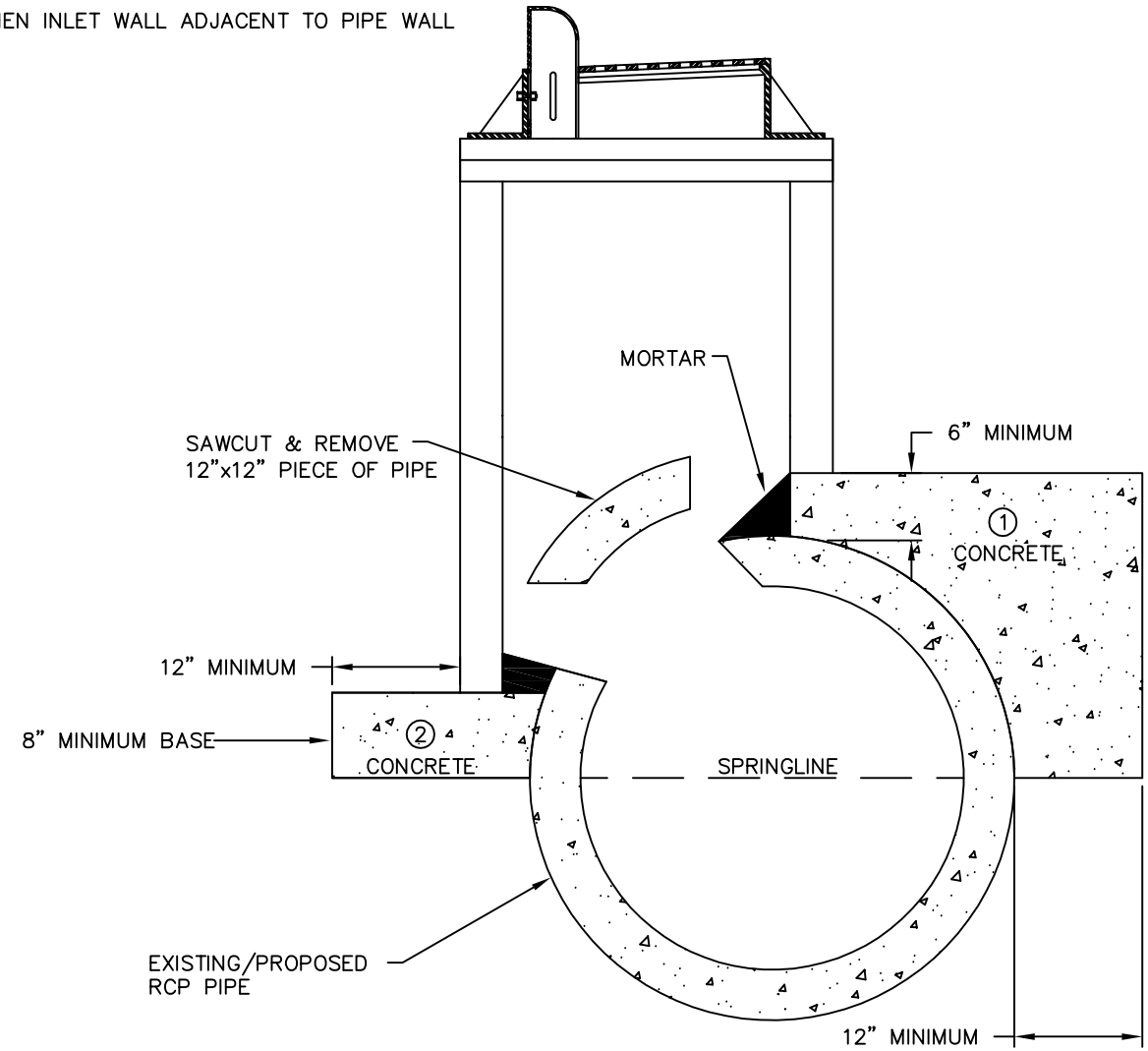

CITY OF GREEN BAY
DEPARTMENT OF PUBLIC WORKS
ENGINEERING DIVISION

MODIFIED SPEC/STD INLET
& MANHOLE

CITY OF GREEN BAY
STANDARD SPECIFICATION
2020 EDITION

NOTE:

1. INLETS SHALL MEET ASTM C-478 STANDARDS FOR REINFORCED CONCRETE INLETS.
2. USE RUBBER ADJUSTMENT RING IN ASPHALT ALLEY OR PARKING LOT.

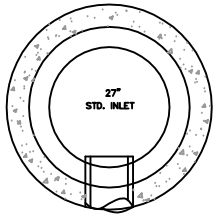

ALLEY YARD/PARKING LOT DRAIN

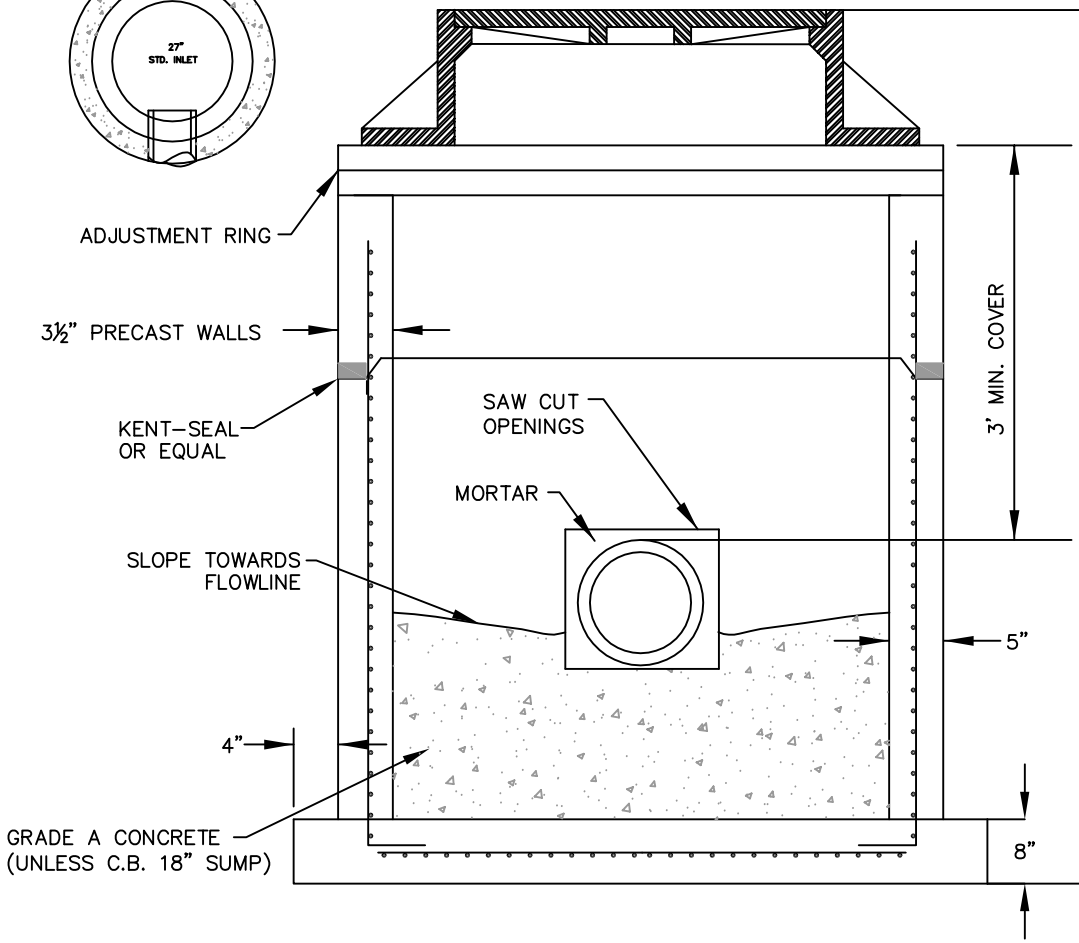

CATCH BASIN/YARD DRAIN WITH SUMP

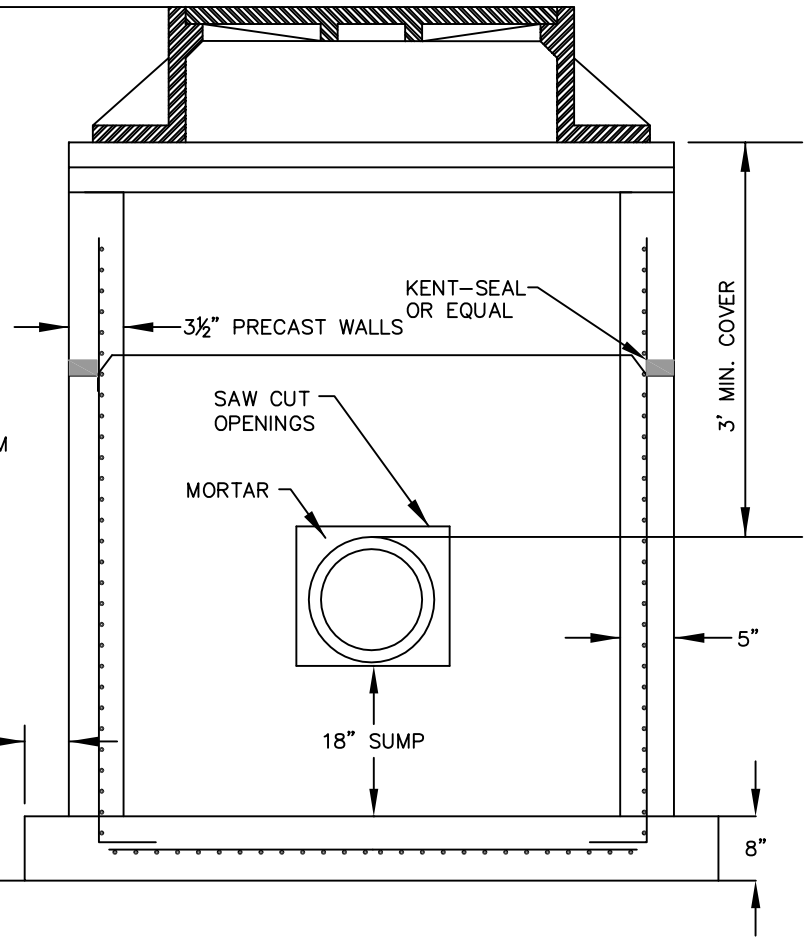

CITY OF GREEN BAY
DEPARTMENT OF PUBLIC WORKS
ENGINEERING DIVISION

STD ALLEY YARD/PARKING LOT DRAIN AND CATCH BASIN/YARD DRAIN

CITY OF GREEN BAY
STANDARD SPECIFICATION
2020 EDITION

ENVIRO–CURB LOGO

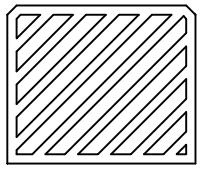

TYPE DR

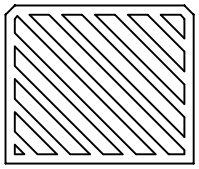

TYPE DL

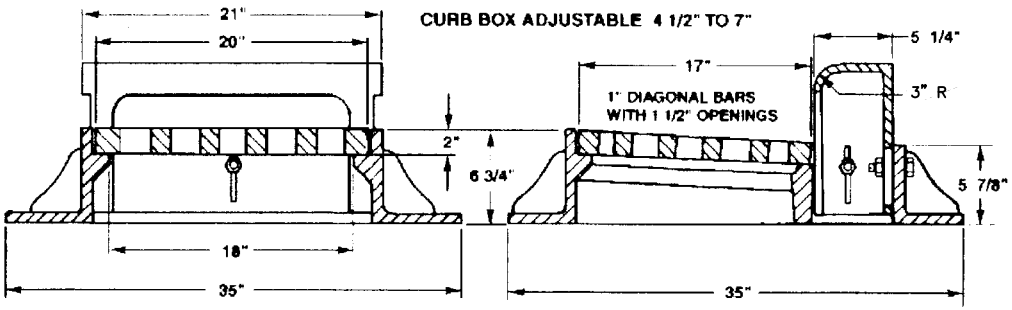

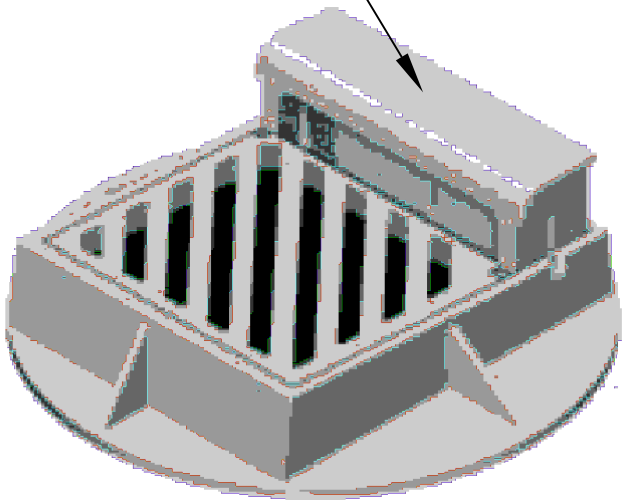

NEENAH R–3070, HEAVY DUTY CURB INLET FRAME, GRATE, AND
CURB BOX WITH ENVIRO–CUB LOGO

CITY OF GREEN BAY DEPARTMENT OF PUBLIC WORKS ENGINEERING DIVISION	STANDARD INLET CASTING	CITY OF GREEN BAY STANDARD SPECIFICATION 2020 EDITION

ENVIRO–CURB LOGO

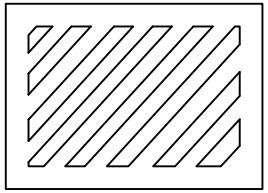

TYPE DR

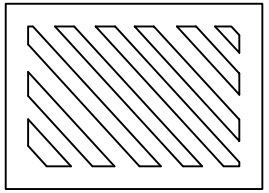

TYPE DL

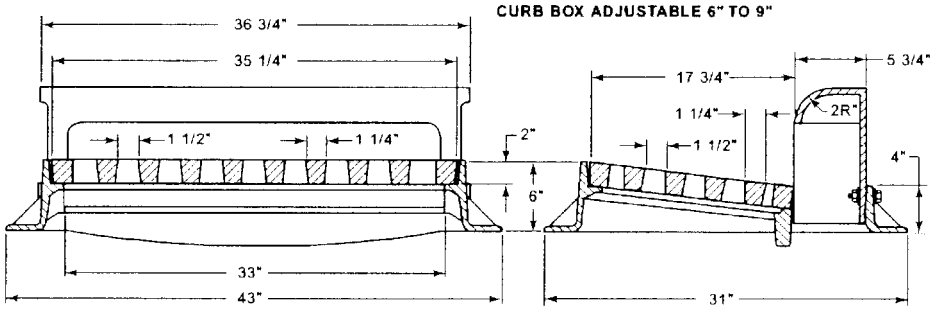

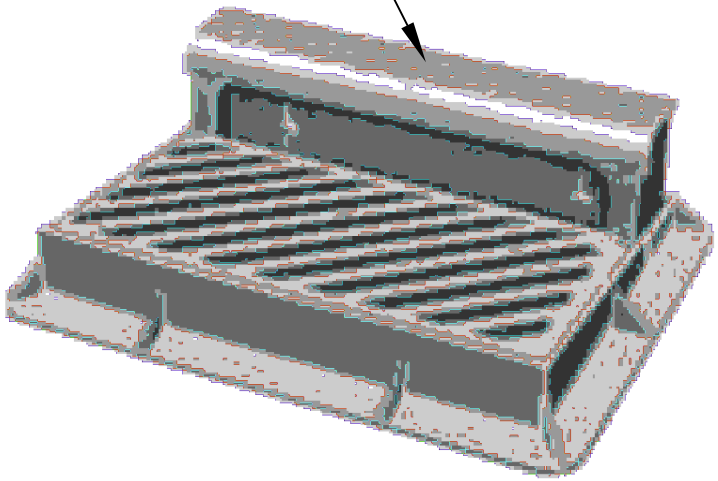

NEENAH R–3067, HEAVY DUTY CURB INLET FRAME, GRATE, AND CURB BOX WITH ENVIRO–CURB LOGO

ALSO AVAILABLE WITH FLAT MOUNTABLE SOLID CURB PLATE (CURB PLATE IS NEENAH R–3246–1), IN PLACE OF CURB BOX.

CITY OF GREEN BAY DEPARTMENT OF PUBLIC WORKS ENGINEERING DIVISION	SPECIAL INLET CASTING	CITY OF GREEN BAY STANDARD SPECIFICATION 2020 EDITION

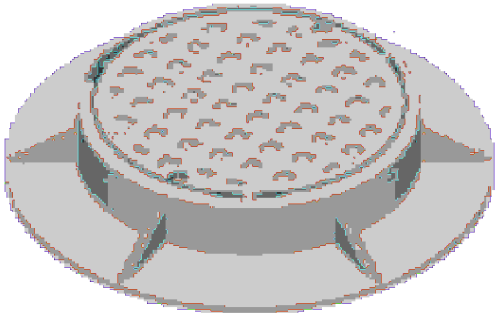

NEENAH R-1500 TYPE "B" NON-ROCKING, LOCKING COVER WITH OPEN PICK HOLE STORM OR SELF SEALING CONCEALED PICK HOLE SANITARY

NEENAH R-2050 TYPE "D" NON-ROCKING, LOCKING COVER WITH OPEN PICK HOLE

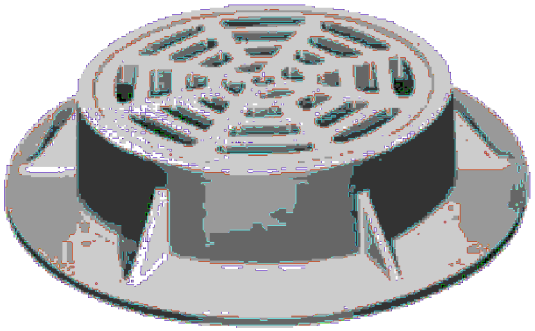

NEENAH R-2560 TYPE "E' BEEHIVE COVER

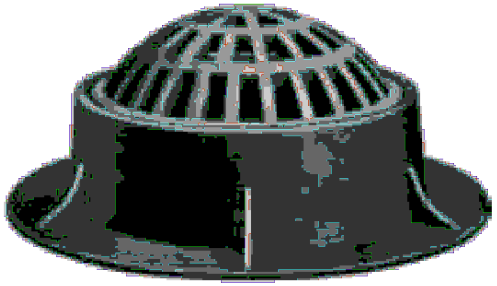

CITY OF GREEN BAY
DEPARTMENT OF PUBLIC WORKS
ENGINEERING DIVISION

8" MANHOLE
CASTING AND COVERS

CITY OF GREEN BAY
STANDARD SPECIFICATION
2020 EDITION

CLEANOUT DETAIL

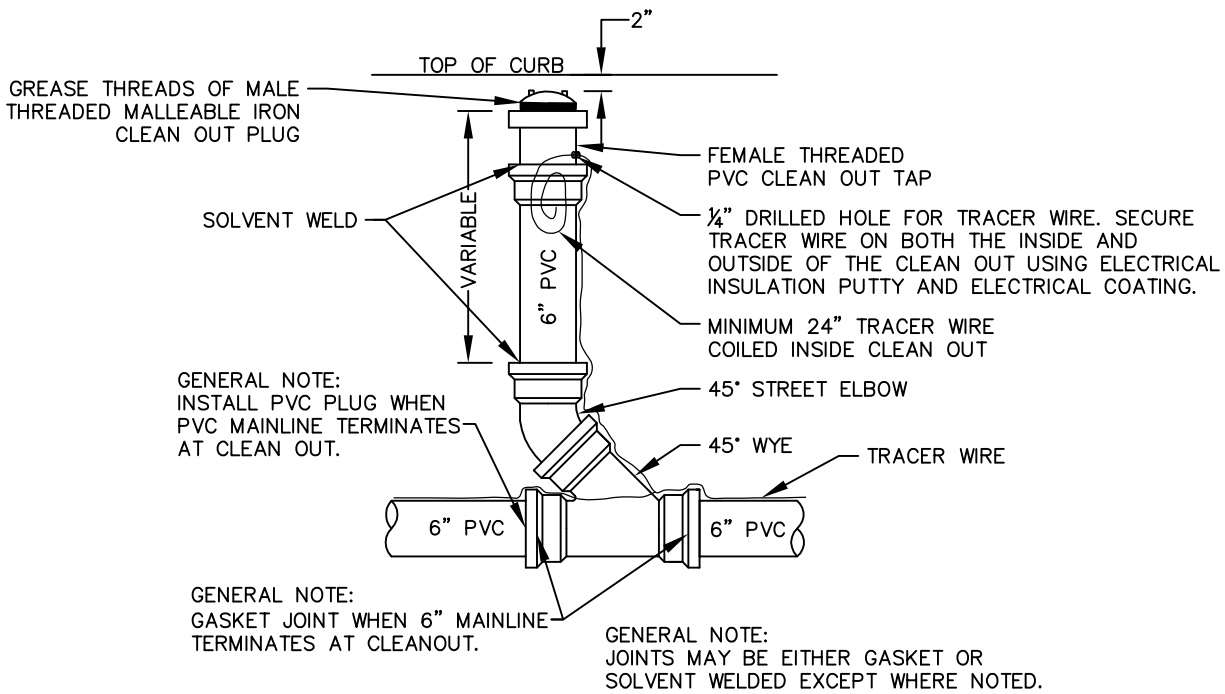

WYE DETAIL

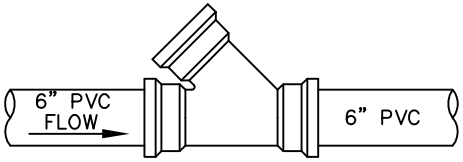

WYE INSTALLED WITH FLOW

PLAN SYMBOL=

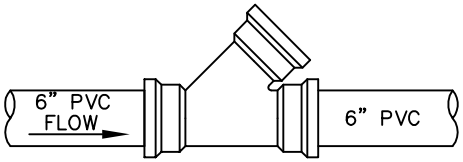

WYE INSTALLED AGAINST FLOW

PLAN SYMBOL=

PLUG DETAIL

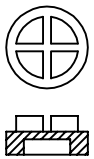

CITY OF GREEN BAY
DEPARTMENT OF PUBLIC WORKS
ENGINEERING DIVISION

MINI-STORM SEWER CLEANOUT AND WYE DIRECTION

CITY OF GREEN BAY
STANDARD SPECIFICATION
2020 EDITION

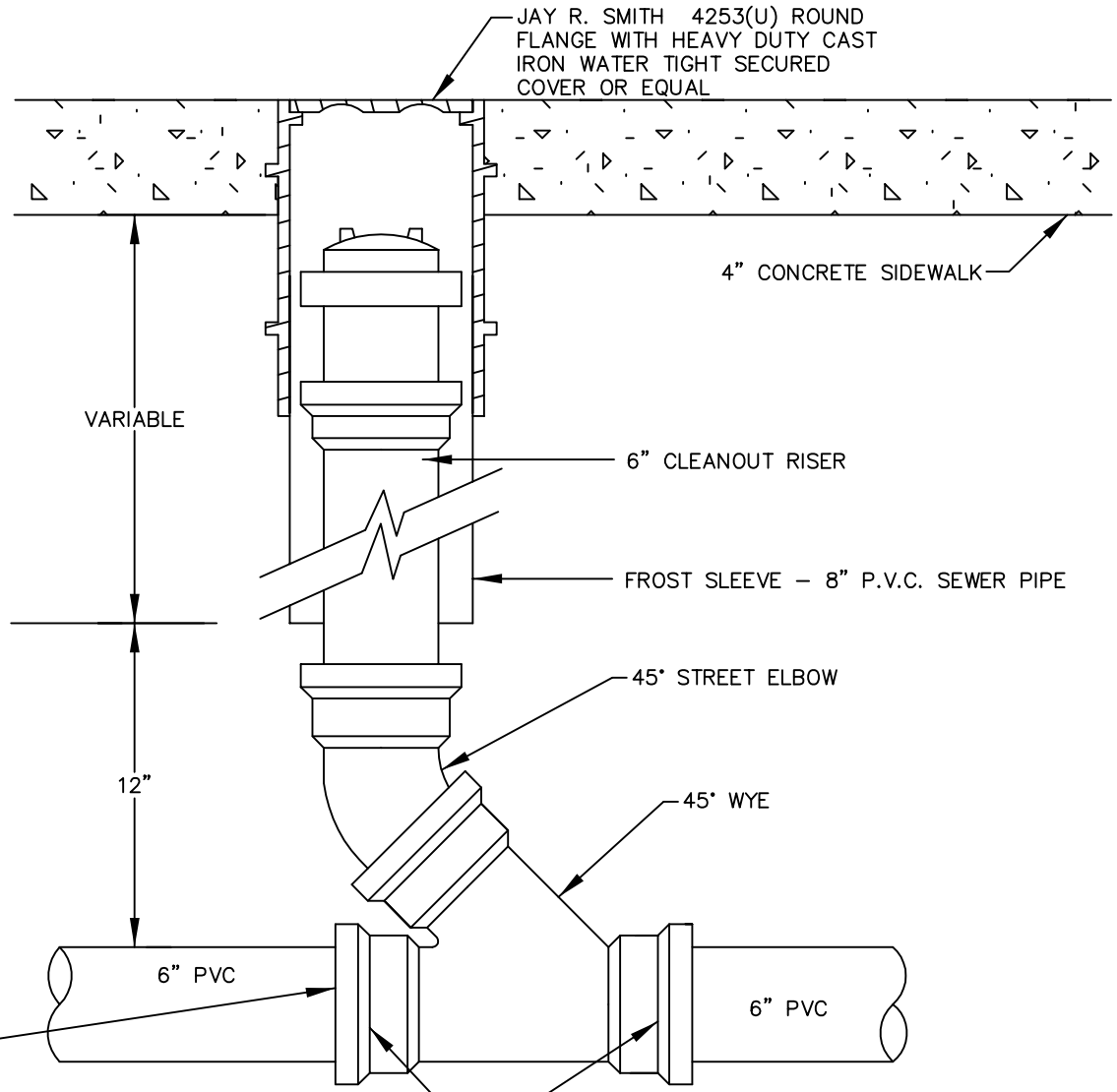

GENERAL NOTE:
INSTALL PVC PLUG WHEN PVC MAINLINE TERMINATES AT CLEAN OUT.

GENERAL NOTE:
GASKET JOINT WHEN 6" MAINLINE TERMINATES AT CLEANOUT.

GENERAL NOTE:
JOINTS MAY BE EITHER GASKET OR SOLVENT WELDED EXCEPT WHERE NOTED.

CITY OF GREEN BAY DEPARTMENT OF PUBLIC WORKS ENGINEERING DIVISION	MINI STORM SEWER WITH FROST SLEEVE	CITY OF GREEN BAY STANDARD SPECIFICATION 2020 EDITION

NOTES:

1. CALL FOR UTILITY LOCATES BEFORE DIGGING.
2. INSTALL TRACER WIRE ALONG TOP OF STORM SEWER LATERAL.
3. TAPE TRACER WIRE TO THE TOP OF THE LATERAL A MINIMUM OF EVERY 6'.
4. TRACER WIRE SHALL BE SINGLE-STRAND #12 AWG COPPER WIRE WITH CONTINUOUS BROWN PLASTIC COATING.
5. TERMINATE TRACER WIRE ABOVE GROUND AT THE HOUSE.
6. LEAVE 18" MIN OF TRACER WIRE AT THE TERMINATION OF THE LATERAL FOR EXTENSION BY THE CITY'S CONTRACTOR.
7. THE CONTRACTOR WILL AUGER PAST ALL TREES AND PROTECT WITH SAFETY FENCE AS SHOWN. THE COST OF AUGERING AND PROTECTING WITH SNOW FENCE WILL BE INCLUDED IN THE BID PRICE OF 6" MINI-STORM SEWER.
8. WRAP SNOW FENCING AROUND EVERY TREE TO PROTECT TRUNK FROM GETTING MARKED BY THE TRACTOR AND BACKHOE.
9. SLURRY BACKFILL MEETING THE REQUIREMENTS SPECIFIED IN SECTION 404.2 TO BE USED IN ANY LOCATIONS WHERE TYPICAL BACKFILL CANNOT BE USED SUCH AS AUGERED TRENCHES UNDER TREES.

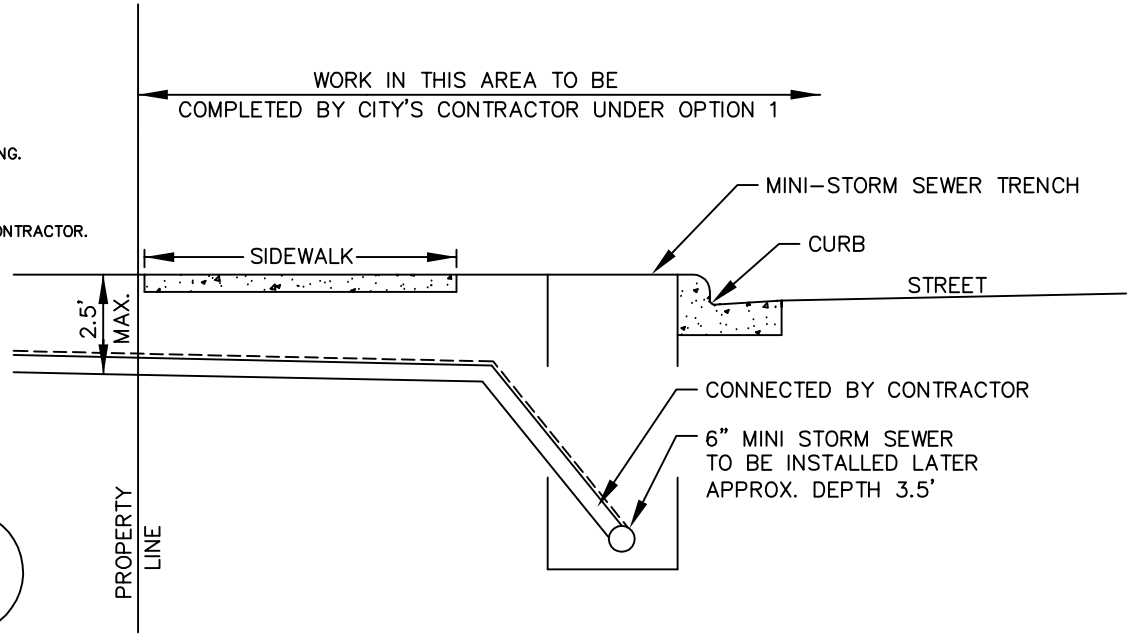

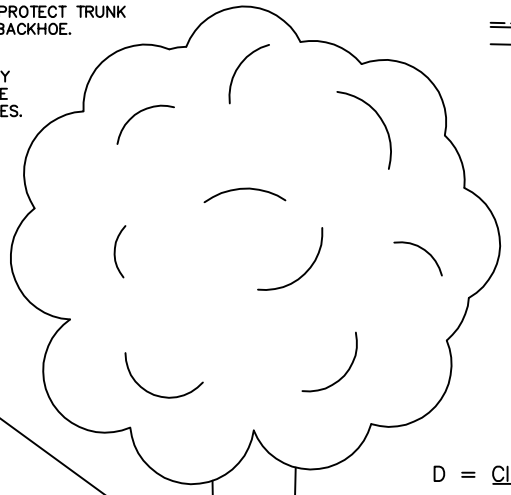

CONTRACTOR TO PROVIDE SNOW FENCE AND TEMPORARILY WRAP AROUND TREE TO THE HEIGHT OF FIRST LIMB

$$D = \frac{\text{CIRCUMFERENCE (INCHES)}}{3}$$

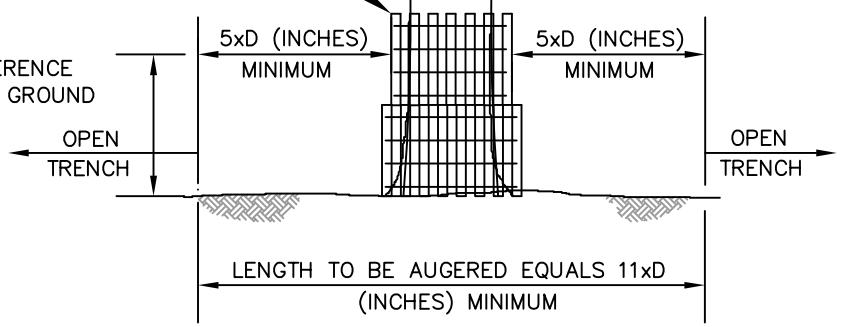

TREE DIAMETER	MINIMUM DISTANCE
< 3"	3 FEET
3" TO 8"	6 FEET
8" TO 14"	8 FEET
> 14"	10 FEET

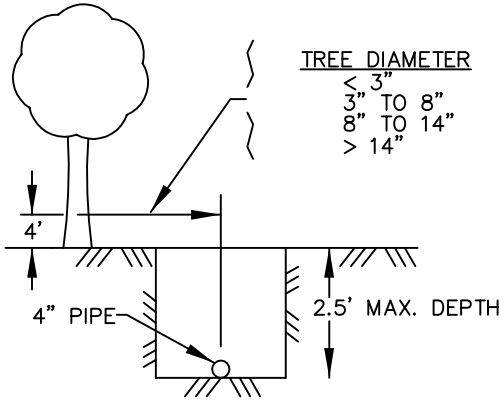

SECTION A-A
MINIMUM LATERAL DISTANCE FROM TREE

CITY OF GREEN BAY
DEPARTMENT OF PUBLIC WORKS
ENGINEERING DIVISION

TYPICAL MINI STORM SEWER
CONNECTION AND AUGERING

CITY OF GREEN BAY
STANDARD SPECIFICATION
2020 EDITION

Division 5 Detail Drawings

Green Bay Water Utility

Green Bay Water Utility (Continued)

GENERAL SYMBOLS

- BURIED VALVE & BOX
- AIR RELEASE ASSEMBLY
- REDUCER/INCREASER
- BA=3.5 — BEND WITH THRUST BLOCK; BEARING AREA IN SQ FT
- JRL=15 — BEND WITH JOINT RESTRAINT SYSTEM; LENGTH IN FEET ON ALL SIDES OF FITTING
- HYDRANT, VALVE, & ANCHORING TEE
- TAPPING SLEEVE & VALVE
- SOLID SLEEVE
- PLUG OR CAP ON END OF MAIN
- FLUSH PIPE
- RIGID INSULATION
- CENTER LINE

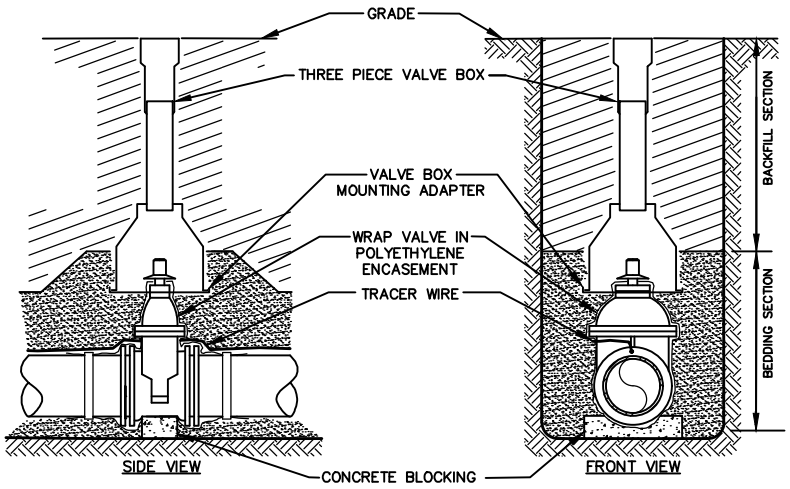

RESILIENT SEATED GATE VALVE & BOX SETTING

NOT TO SCALE

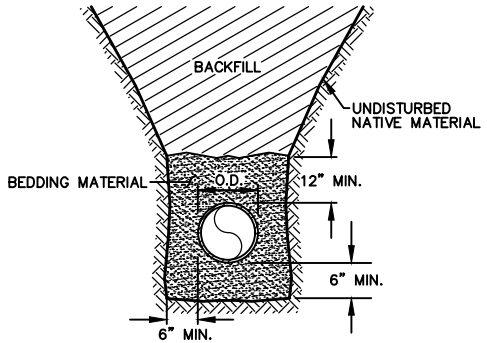

BEDDING

NOT TO SCALE

GENERAL PROJECT NOTES

1. THE CONTRACTOR SHALL FIELD VERIFY THE LOCATIONS AND ELEVATIONS OF ALL EXISTING FACILITIES. CHANGES IN THE VERTICAL AND/OR HORIZONTAL ALIGNMENT OF THE WATER MAIN MAY BE REQUIRED TO AVOID CONFLICT WITH EXISTING FACILITIES.
2. THE CONTRACTOR SHALL INSTALL THE WATER MAIN BELOW THE EXISTING AND PROPOSED SEWERS, AS REQUIRED, WHEN AN ALIGNMENT CONFLICT OCCURS.
3. THE CONTRACTOR SHALL BE REQUIRED TO REMOVE AIR RELEASE AND FLUSHING DEVICES AS REQUIRED BY THE ENGINEER.
4. EXISTING WATER MAIN, HYDRANTS AND SERVICES SHALL NOT BE ABANDONED UNTIL THE NEW WATER MAIN HAS BEEN PLACED IN SERVICE AND ALL WATER SERVICE RECONNECTIONS ARE COMPLETE.
5. THE CONTRACTOR SHALL REMOVE THE EXISTING VALVES, HYDRANTS, AND CURB BOXES TO A MINIMUM DEPTH OF TWO FEET BELOW THE PROPOSED GRADE AFTER THE EXISTING WATER MAIN HAS BEEN ABANDONED, UNLESS DIRECTED OTHERWISE BY THE ENGINEER.
6. THE CONTRACTOR SHALL FIELD VERIFY THE ELEVATIONS, SIZES, AND MATERIAL TYPES OF THE EXISTING WATER MAINS AND WATER SERVICES. THE CONTRACTOR MAY NOT BE ABLE TO CONNECT THE NEW WATER MAIN TO THE EXISTING WATER MAIN AT ALL CONNECTION POINTS UNTIL THE NEW WATER MAIN HAS BEEN TESTED AND DISINFECTED.
7. THE CONTRACTOR SHALL ADJUST ALL VALVE AND CURB BOXES WITHIN THE PROJECT AREA TO THE CORRECT GRADE AS REQUIRED BY THE ENGINEER.
8. THE CONTRACTOR MAY HAVE TO RAISE OR LOWER EXISTING WATER SERVICES THAT ARE IN CONFLICT WITH THE PROPOSED FACILITIES. THE CONTRACTOR SHALL NOTIFY THE GREEN BAY WATER UTILITY PRIOR TO ADJUSTING EXISTING WATER SERVICES.

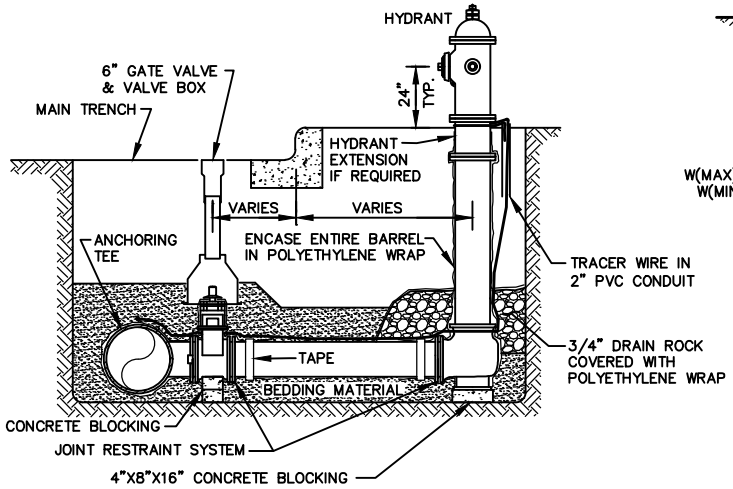

STANDARD HYDRANT

NOT TO SCALE

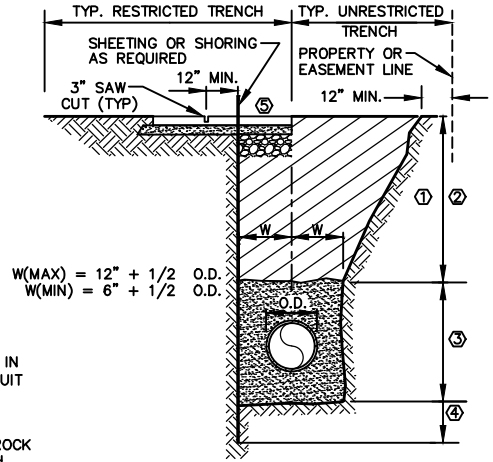

TRENCH SECTION NOTES

1. SIDE SLOPE TO BE DETERMINED BY SOIL CONDITIONS
2. BACKFILL SECTION AS SPECIFIED
3. BEDDING SECTION AS SPECIFIED
4. TOE PENETRATION OF SHEETING AS REQUIRED
5. REPLACE PAVEMENT TO MATCH EXISTING UNLESS SPECIFIED OTHERWISE

TYPICAL TRENCH SECTION

NOT TO SCALE

CITY OF GREEN BAY
DEPARTMENT OF PUBLIC WORKS
ENGINEERING DIVISION

GREEN BAY WATER UTILITY

CITY OF GREEN BAY
STANDARD SPECIFICATION
2020 EDITION

AIR RELEASE ASSEMBLY NOTES:

1. A 90° BEND MAY BE ATTACHED TO THE OUTLET SIDE OF CORPORATION STOP.
2. COPPER TUBE MAY BE INSTALLED DIRECTLY UP INSIDE OF THE VALVE BOX WITHOUT A LOOP IF APPROVED BY THE ENGINEER.

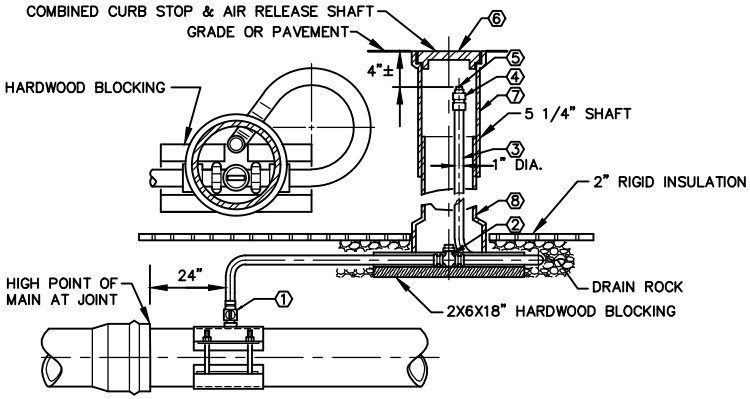

ITEM	DESCRIPTION
1	1" CORPORATION STOP
2	1" CURB STOP WITH DRAIN
3	1" TYPE "K" COPPER TUBE
4	BRASS ADAPTER–COMPRESSION BY FNPT
5	BRASS PLUG
6	COVER – CAST IRON
7	VALVE BOX TOP SECTION – CAST IRON
8	VALVE BOX BOTTOM SECTION – CAST IRON

PERMANENT AIR RELEASE ASSEMBLY

NOT TO SCALE

THRUST BLOCKING NOTES:

1. CONCRETE SHALL HAVE A MIN. COMPRESSIVE STRENGTH OF 2000 PSI & SHALL BE CAST AGAINST UNDISTURBED EARTH.
2. FITTINGS SHALL BE WRAPPED IN POLYETHYLENE WRAP TO PREVENT CONCRETE FROM BONDING TO FITTINGS.
3. FORM CONCRETE AS REQUIRED TO PREVENT CONTACT OR INTERFERENCE WITH PIPE JOINTS.
4. THE LENGTH OF THE THRUST BLOCK SHALL BE APPROXIMATELY TWICE THE HEIGHT. BEARING AREA = LENGTH X HEIGHT

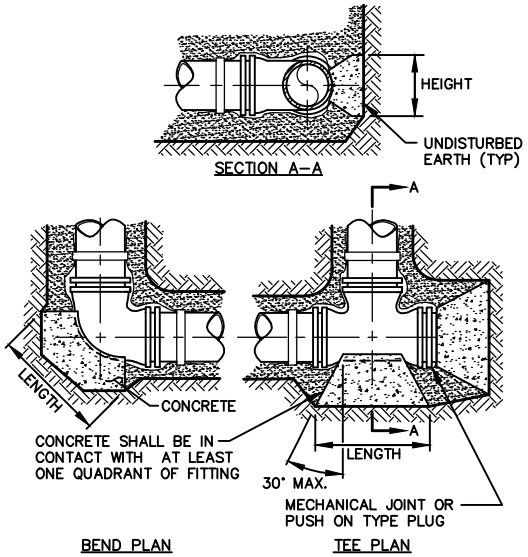

THRUST BLOCKING

NOT TO SCALE

WATER SERVICE NOTES:

1. 1" CORPORATION STOPS SHALL BE DIRECT TAPPED INTO 6" TO 12" DUCTILE IRON WATER MAIN. 1 1/2" AND 2" CORPORATION STOPS SHALL BE TAPPED WITH A TAPPING SADDLE INTO 6" TO 12" DUCTILE IRON WATER MAIN. ALL CORPORATIONS MAY BE DIRECT TAPPED INTO 16" AND LARGER DUCTILE IRON WATER MAIN. ALL CORPORATION STOPS SHALL BE TAPPED WITH A TAPPING SADDLE INTO POLYVINYL CHLORIDE WATER MAIN.
2. A COPPER OR PLASTIC DISC SHALL BE PROVIDED IF THE CURB STOP IS NOT CONNECTED TO AN EXISTING WATER SERVICE.

SERVICE PIPE	CORP. STOP	CURB STOP	SERVICE BOX
1"	1"	1"	1 1/4"
1 1/2"	1 1/2"	1 1/2"	5 1/4"
2"	2"	2"	5 1/4"

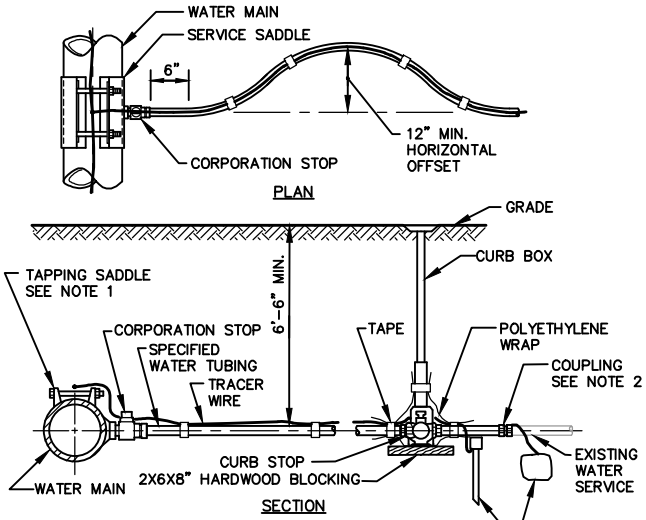

WATER SERVICE

NOT TO SCALE

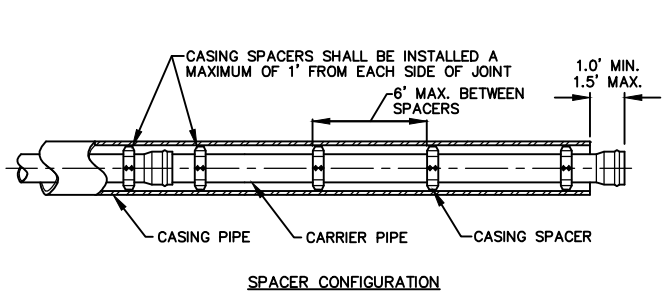

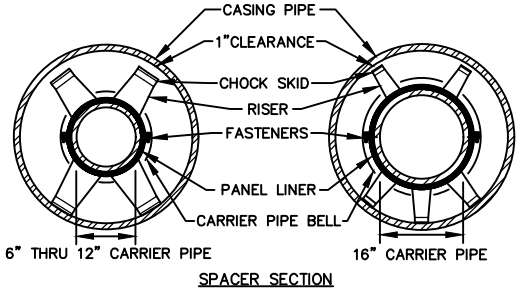

CASING INSTALLATION

NOT TO SCALE

TRACER WIRE GROUND CONNECTION NOTES:

1. PROVIDE TRACER WIRE GROUND CONNECTION AT ALL CONNECTIONS TO EXISTING PIPELINES WITHOUT EXISTING TRACER WIRE UNLESS OTHERWISE NOTED.

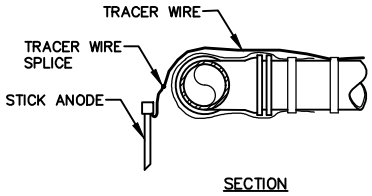

TRACER WIRE GROUND CONNECTION

NOT TO SCALE

CITY OF GREEN BAY
DEPARTMENT OF PUBLIC WORKS
ENGINEERING DIVISION

GREEN BAY WATER UTILITY
(CONTINUED)

CITY OF GREEN BAY
STANDARD SPECIFICATION
2020 EDITION

Division 6 Detail Drawings

Concrete Roadway with Integral Curb

Urban Driveway Sidewalk Adjacent to Curb

Urban Driveway

Concrete Pavement-Pavement Ties

Concrete Pavement Inlet and Manhole

Concrete Pavement Joint Layout

Concrete Pavement Longitudinal Joints (New Construction)

Pavement Repair Expansion Joint Installation

Concrete Pavement Construction, Contraction, and Expansion Joint

Single Lane Concrete Pavement Replacement

Concrete Median Sloped Nose

Traffic Island Detail on New Pavement

Curb and Gutter Sections 18”

Curb and Gutter Sections 24”

Curb and Gutter Sections 30”

Concrete Surface Drain

Mountable Median Curb

Division 6 Detail Drawings

Re-construct Curb

Integral Curb

Tack on Curb for Concrete Pavement

Sidewalk and Curb Ramp Construction

Sidewalk and Curb Ramp Construction (Continued)

Sidewalk Retaining Wall and Sidewalk Curb

Step

Steel Plate Beam Guard Class “B”

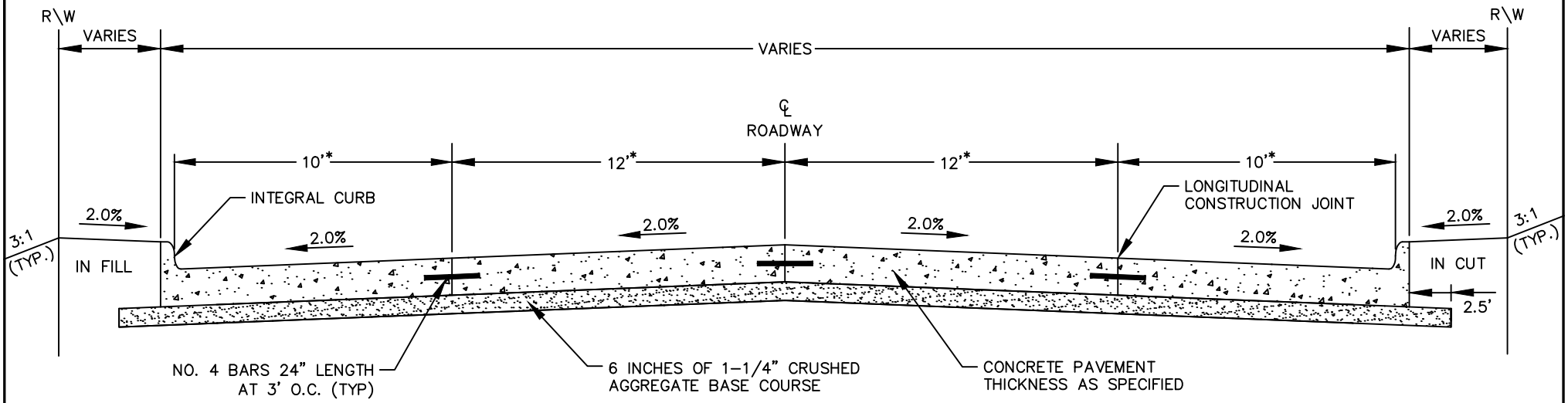

* REFER TO CONTRACT PLANS FOR LANE WIDTHS

CITY OF GREEN BAY DEPARTMENT OF PUBLIC WORKS ENGINEERING DIVISION	CONCRETE ROADWAY WITH INTEGRAL CURB	CITY OF GREEN BAY STANDARD SPECIFICATION 2020 EDITION

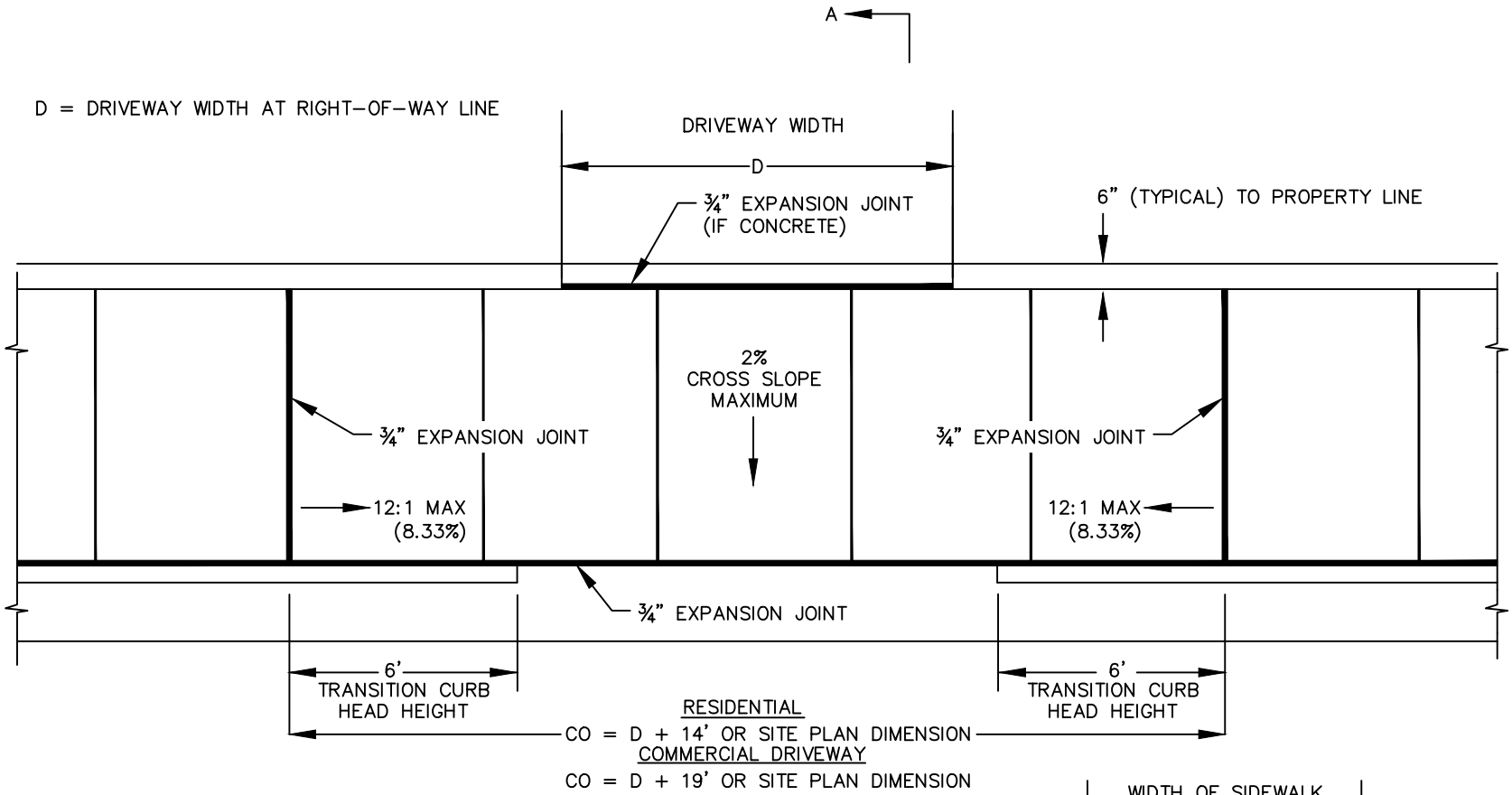

PLAN VIEW

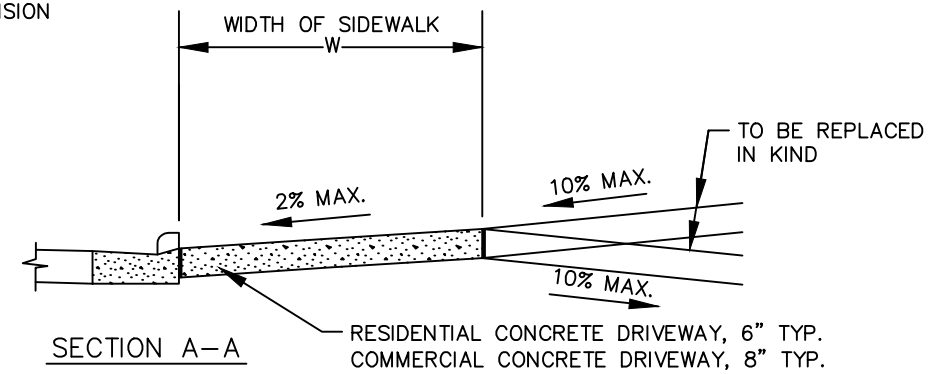

SECTION A–A

CITY OF GREEN BAY DEPARTMENT OF PUBLIC WORKS ENGINEERING DIVISION	URBAN DRIVEWAY SIDEWALK ADJACENT TO CURB	CITY OF GREEN BAY STANDARD SPECIFICATION 2020 EDITION

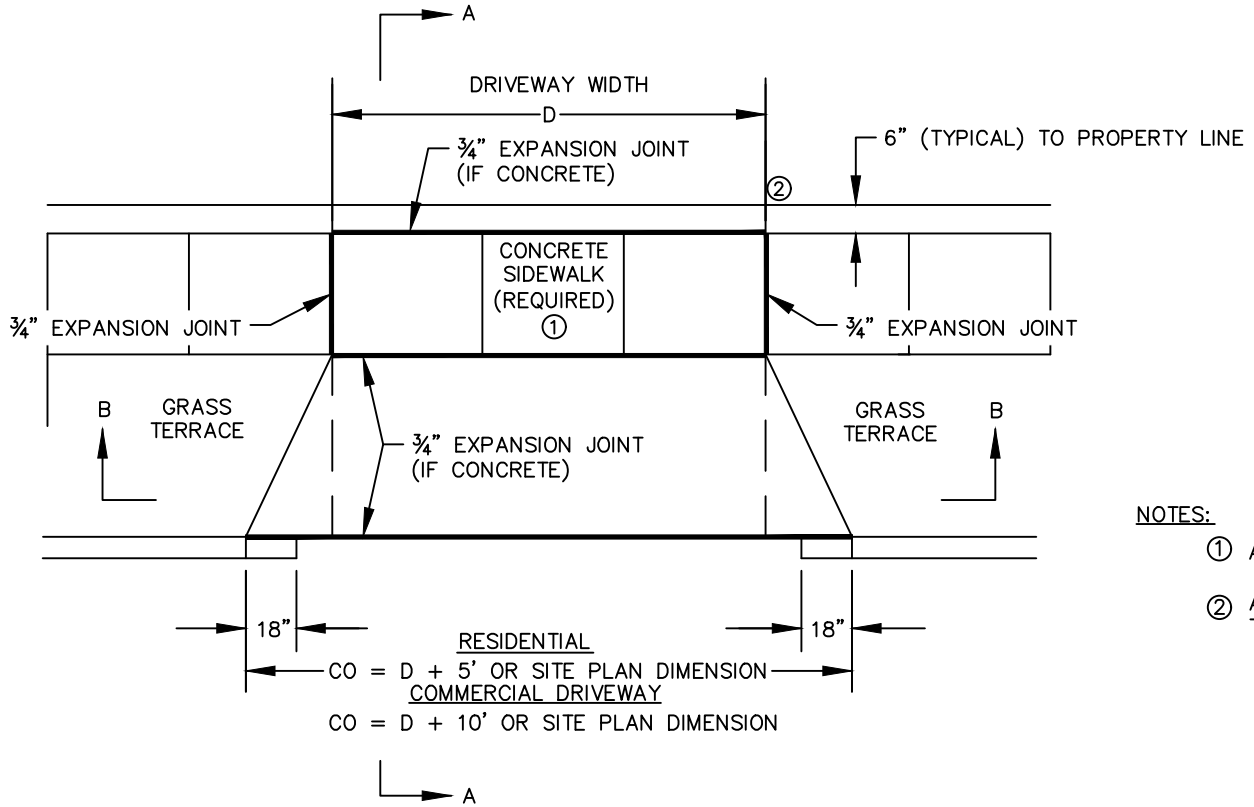

PLAN VIEW

MAX D = 12' SINGLE WIDTH RESIDENTIAL
MAX D = 25' DOUBLE WIDTH RESIDENTIAL
MAX D = 15' COMMERCIAL ONE-WAY
MAX D = 25' COMMERCIAL TWO-WAY
MAX CO = 17' SINGLE WIDTH RESIDENTIAL
MAX CO = 25' DOUBLE WIDTH RESIDENTIAL
MAX CO = 30' COMMERCIAL ONE-WAY OR AS SHOWN ON APPROVED SITE PLAN
MAX CO = 35' COMMERCIAL TWO-WAY OR AS SHOWN ON AN APPROVED SITE PLAN

NOTES:

① ALL DRIVEWAYS REQUIRE A 5' CONCRETE SIDEWALK SECTION.

② ALL PARKING LOT CURBING MUST BE TAPERED TO MEET THE BACK OF THE SIDEWALK.

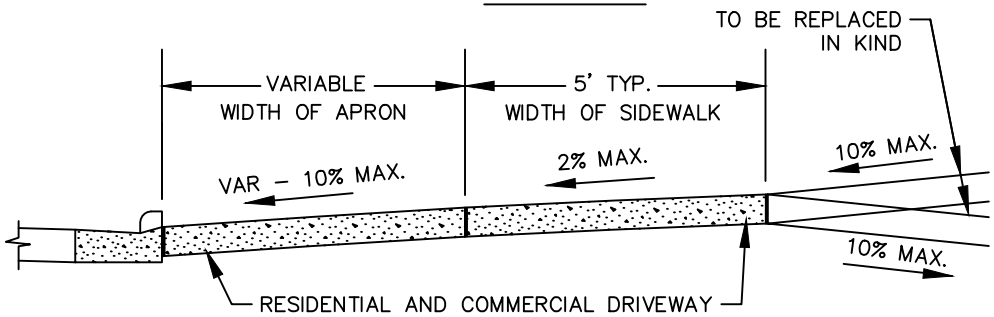

SECTION A–A

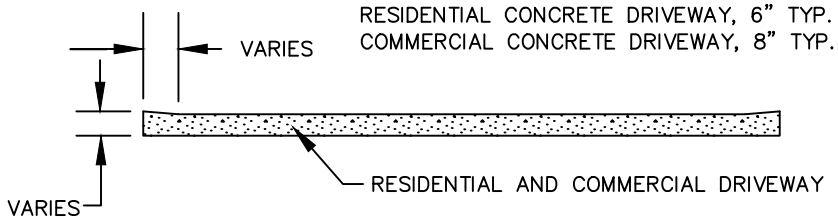

SECTION B–B

CITY OF GREEN BAY
DEPARTMENT OF PUBLIC WORKS
ENGINEERING DIVISION

URBAN DRIVEWAY

CITY OF GREEN BAY
STANDARD SPECIFICATION
2020 EDITION

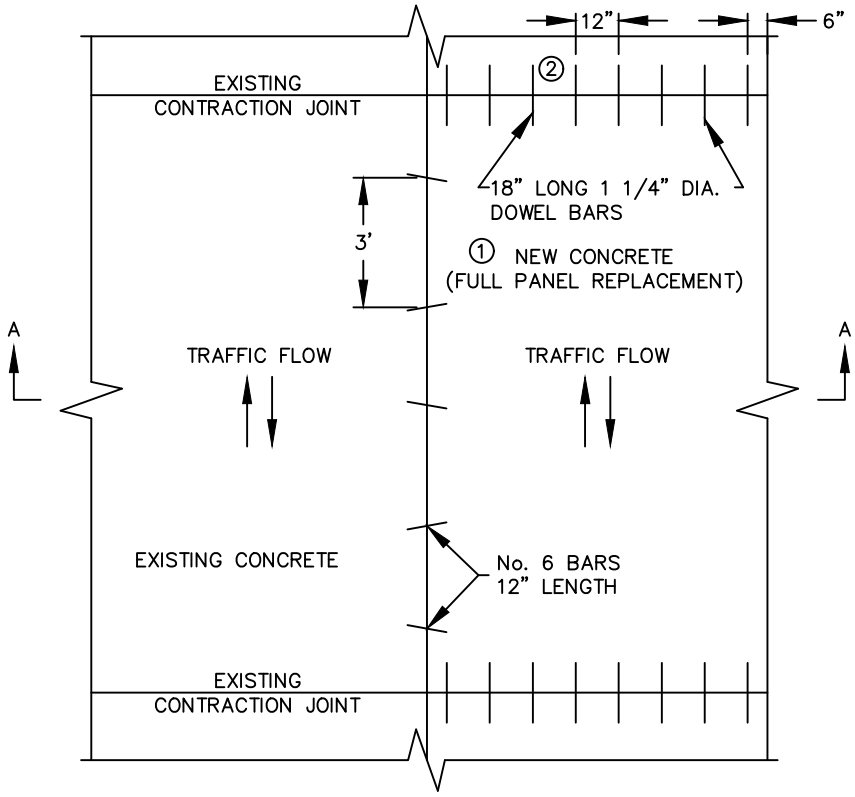

PLAN VIEW

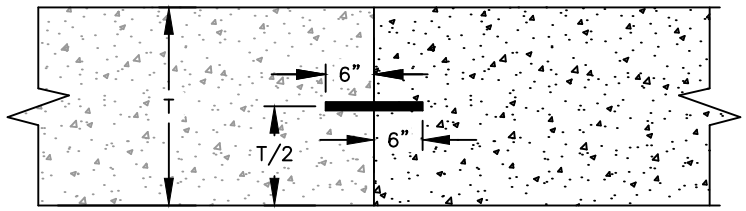

SECTION A–A

NOTES:

① PAVEMENT TIES FOR NEW CURB & GUTTER, CONCRETE PAVEMENT, OR OTHER NEW CONCRETE NOT TERMINATING AT AN EXISTING JOINT SHALL BE No. 6 12" DEFORMED BARS SPACED 3' C–C, INSTALLED ON 6:1 SKEW HORIZONTALLY. DIRECTION OF SKEW ALTERNATING AFTER EVERY ONE OR TWO BARS. THE HOLE FOR THE BAR SHALL BE DRILLED TO A DEPTH OF 7" AND TO SUCH A DIAMETER AS TO PROVIDE A TIGHT DRIVEN FIT.

② DOWEL BARS SHALL BE INSTALLED PARALLEL TO THE PAVEMENT CENTERLINE AND PAVEMENT SURFACE.

③ DOWEL BARS SHALL BE ANCHORED INTO DRILL HOLES WITH AN APPROVED EPOXY GROUT. THE FREE END OF DOWEL BARS SHALL RECEIVE A THIN UNIFORM COATING OF BOND BREAKER.

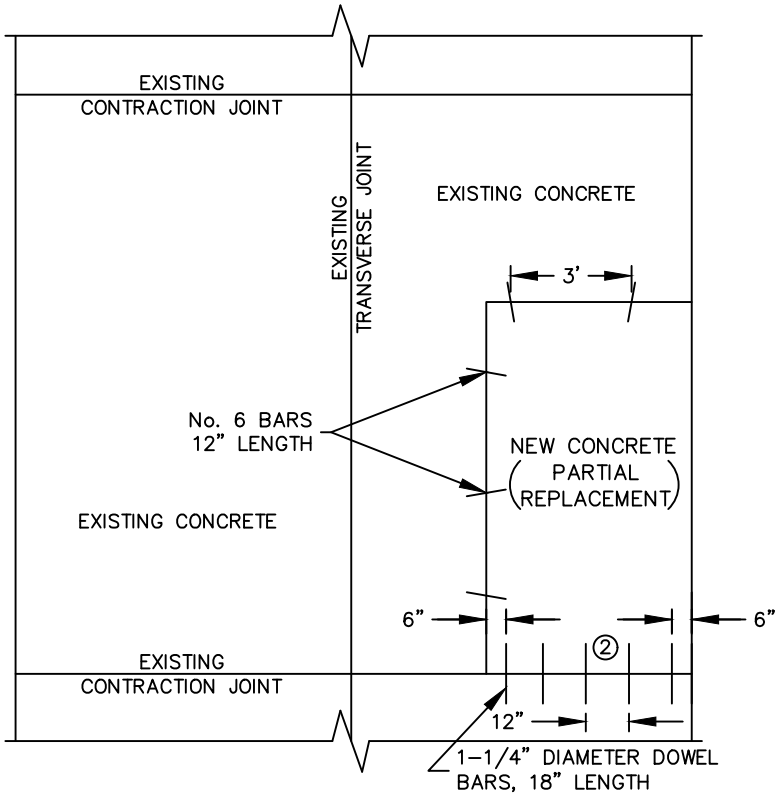

PLAN VIEW

CITY OF GREEN BAY
DEPARTMENT OF PUBLIC WORKS
ENGINEERING DIVISION

CONCRETE PAVEMENT–
PAVEMENT TIES

CITY OF GREEN BAY
STANDARD SPECIFICATION
2020 EDITION

INLET WITH INTEGRAL CURB

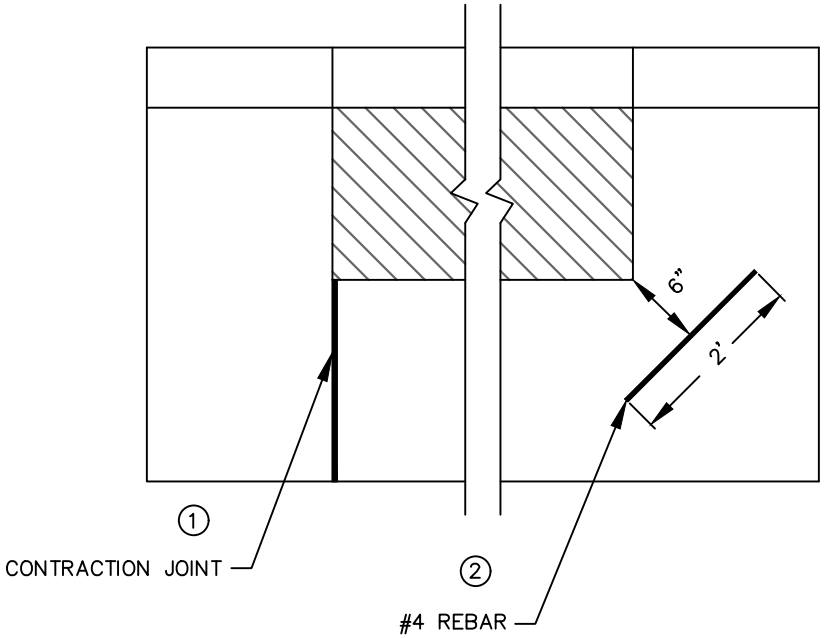

NOTES:

1. IN CASES WHERE THERE IS NO CONTRACTION JOINT, REPLACE WITH #4 REBAR.
2. #4 REBAR TO BE PLACED AT A MINIMUM DEPTH OF 4.0" (OR HALF THE DEPTH OF THE PAVEMENT).
3. AN 18" MINIMUM CLEARANCE BETWEEN THE EXTERIOR LIMIT OF THE STRUCTURE TO THE DIAMOND BOXOUT.

MANHOLE IN CONCRETE PAVEMENT ON ℄
(ONLY AS APPROVED BY ENGINEER)

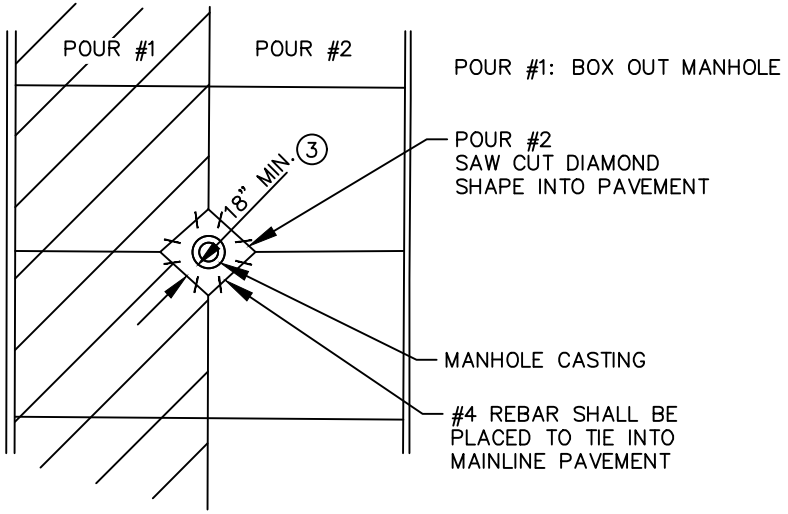

MANHOLE IN CONCRETE PAVEMENT OFF ℄

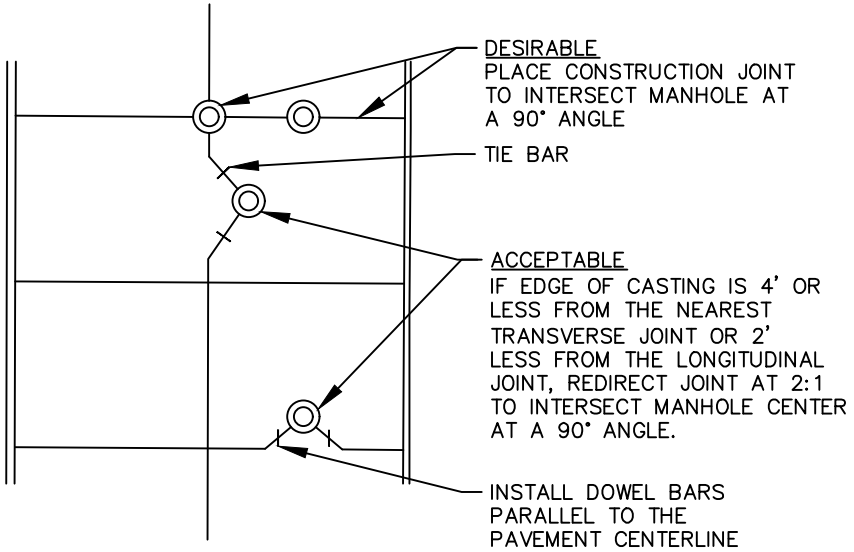

CITY OF GREEN BAY DEPARTMENT OF PUBLIC WORKS ENGINEERING DIVISION	CONCRETE PAVEMENT INLET AND MANHOLE	CITY OF GREEN BAY STANDARD SPECIFICATION 2020 EDITION

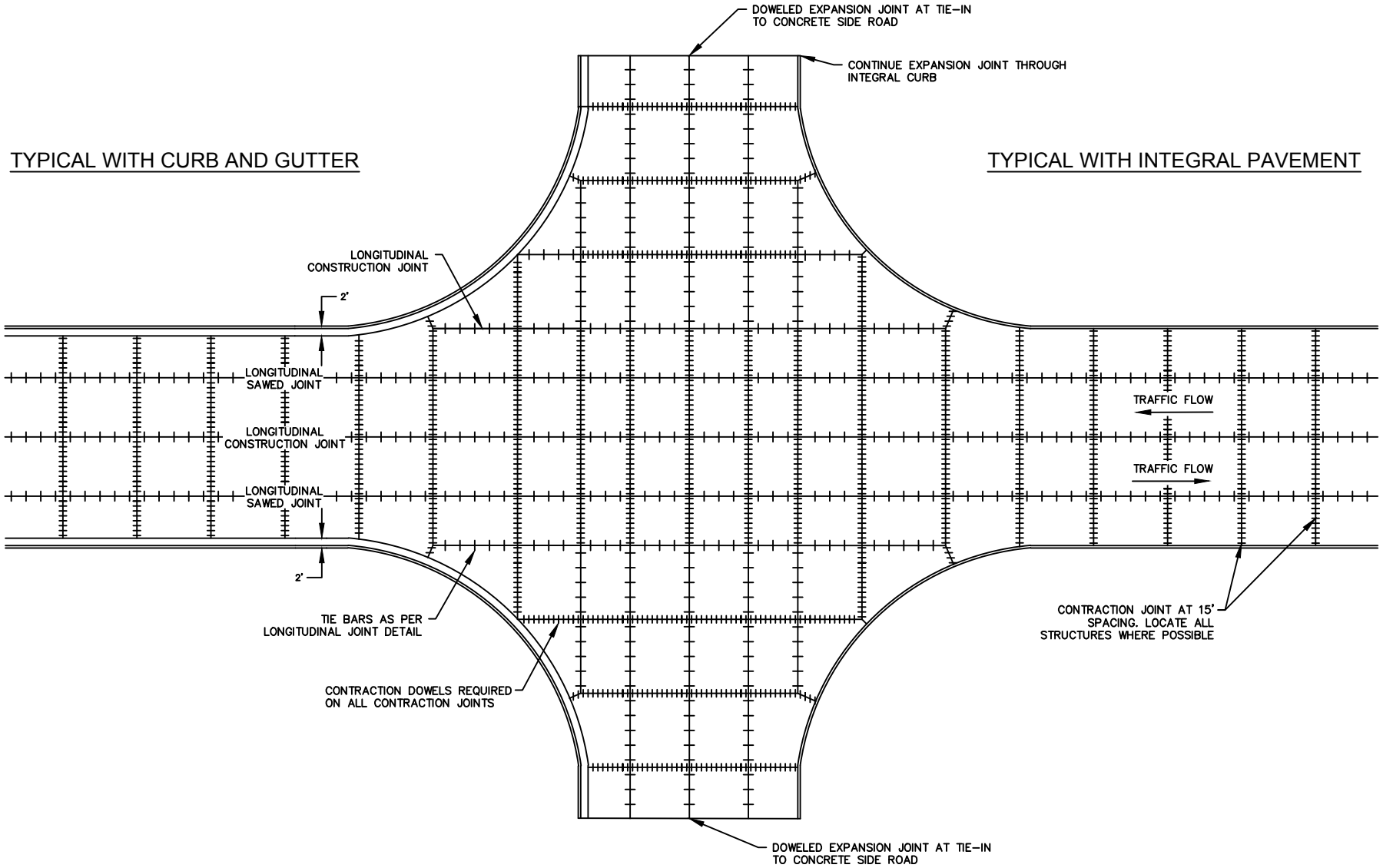

CITY OF GREEN BAY
DEPARTMENT OF PUBLIC WORKS
ENGINEERING DIVISION

CONCRETE PAVEMENT
JOINT LAYOUT

CITY OF GREEN BAY
STANDARD SPECIFICATION
2020 EDITION

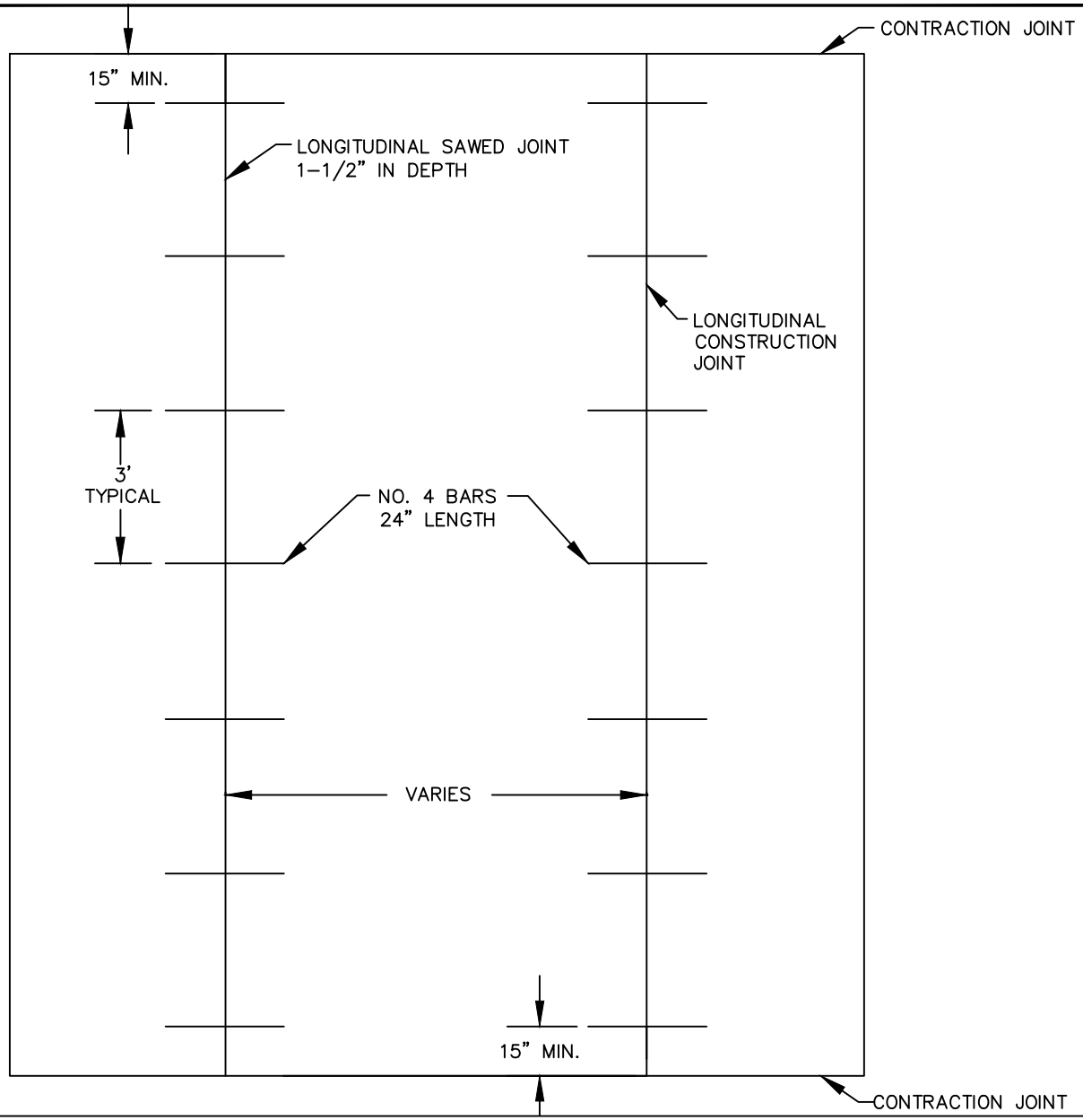

CITY OF GREEN BAY
DEPARTMENT OF PUBLIC WORKS
ENGINEERING DIVISION

CONCRETE PAVEMENT
LONGITUDINAL JOINTS
(NEW CONSTRUCTION)

CITY OF GREEN BAY
STANDARD SPECIFICATION
2020 EDITION

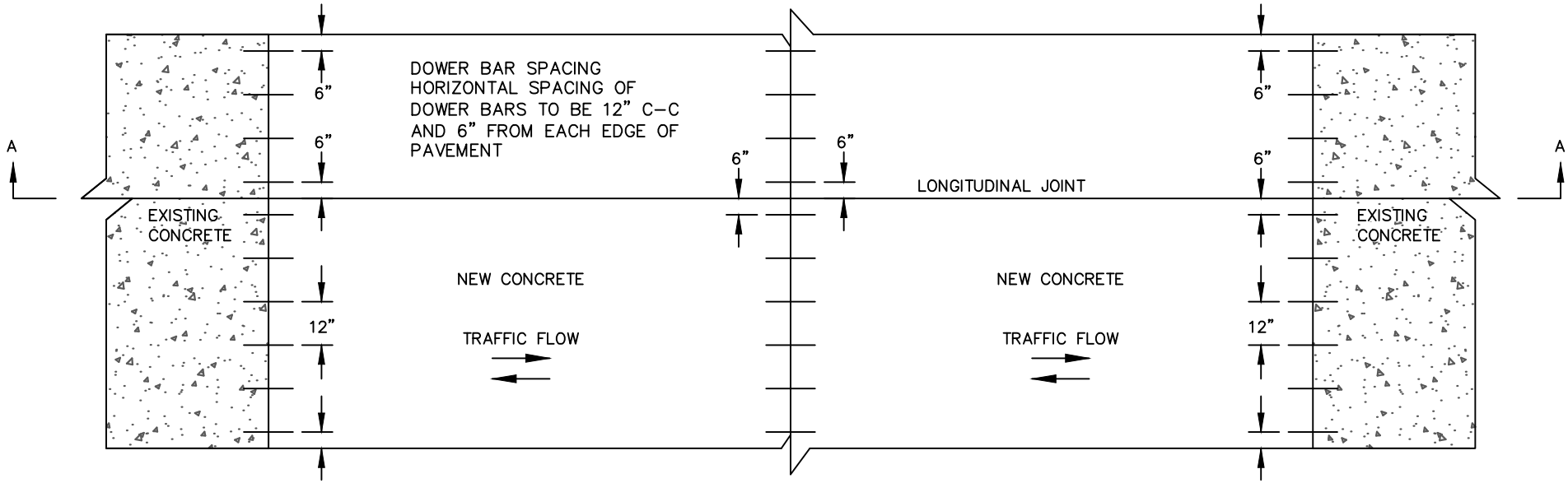

PLAN VIEW

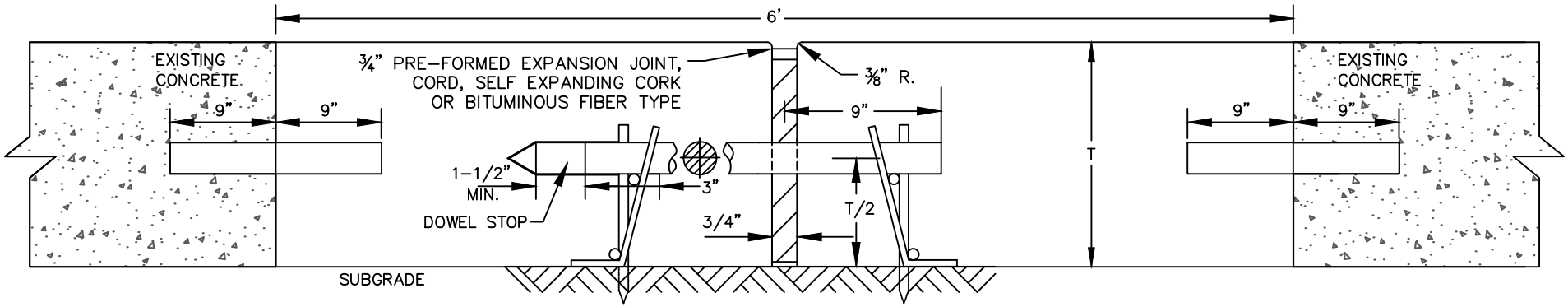

SECTION A–A

NOTES:

① DOWEL BARS SHALL BE INSTALLED PARALLEL TO THE PAVEMENT CENTERLINE AND PAVEMENT SURFACE.

② DOWEL BARS SHALL BE ANCHORED INTO DRILL HOLES WITH AN APPROVED EPOXY GROUT. THE FREE END OF DOWEL BARS SHALL RECEIVE A THIN UNIFORM COATING OF BOND BREAKER.

③ 1–1/4" x 18" SMOOTH METAL, EPOXY COATED DOWELS REQUIRED FOR PROPER PAVEMENT EXPANSION.

CITY OF GREEN BAY DEPARTMENT OF PUBLIC WORKS ENGINEERING DIVISION	PAVEMENT REPAIR EXPANSION JOINT INSTALLATION	CITY OF GREEN BAY STANDARD SPECIFICATION 2020 EDITION

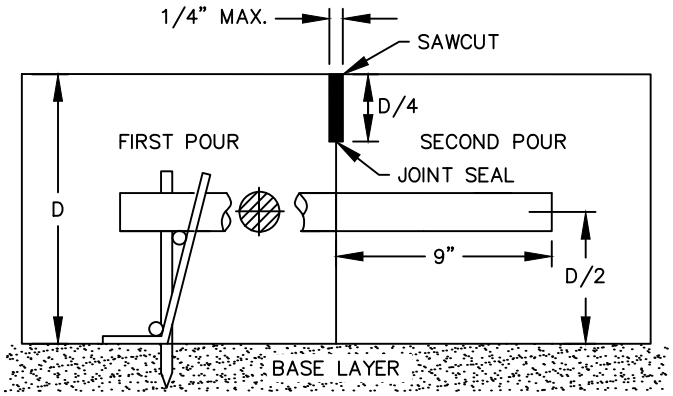

CONSTRUCTION JOINT

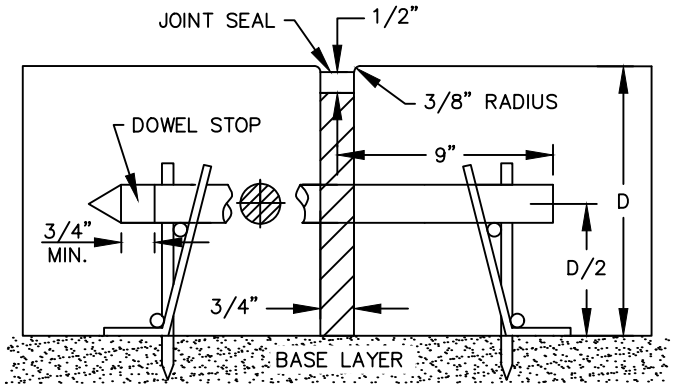

EXPANSION JOINT

CONSTRUCTION & CONTRACTION JOINT NOTES:

1. 1-1/4" x 18" SMOOTH EPOXY COATED DOWEL BARS TO PREVENT BOND WITH CONCRETE. DOWEL ENDS SHALL BE FREE OF ALL BURRS OR PROTRUDING EDGES.
2. HORIZONTAL SPACING OF DOWEL BARS TO BE 12" C-C AND 6" FROM EACH EDGE OF PAVEMENT OR BACK OF CURB (INTEGRAL PAVEMENT).
3. CONSTRUCTION JOINTS CAN BE FORMED OR SAWED. IF JOINT IS FORMED, PROVICE A 1/4-INCH RADIUS.

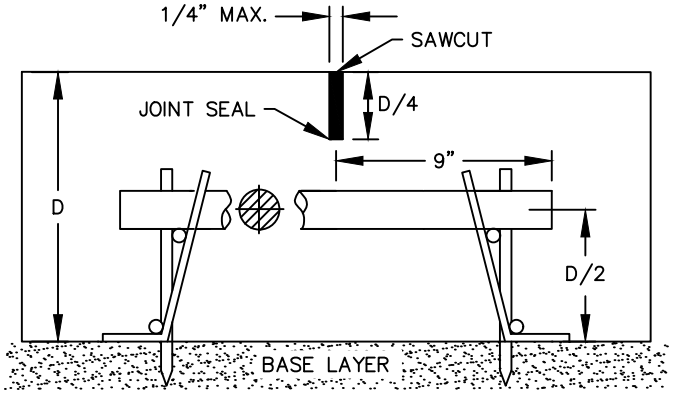

CONTRACTION JOINT

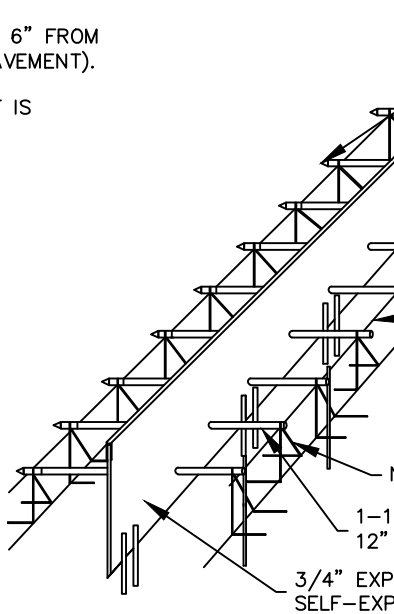

PLASTIC OR METAL CAPS PLACED ON ONE END OF EACH DOWEL FOR PAVEMENT EXPANSION. (6", 7", AND 8" CONCRETE PAVEMENT) DOWEL BARS SHALL BE PARALLEL WITH PAVEMENT

HOLES IN EXPANSION JOINT MATERIAL SHALL BE CLEANLY PUNCHED AT REQUIRED LOCATIONS. DOWEL BARS TO FIT SNUGLY IN JOINT MATERIAL HOLES.

STEEL PINS SHALL BE USED TO PREVENT ANY HORIZONTAL MOVEMENT OF EXPANSION JOINT DURING THE PLACING OF CONCRETE.

ALL CONTACTS OF "U" LEGS WITH HORIZONTAL SUPPORT BAR TO BE RESISTANCE WELDED.

No. 00 STEEL WIRE SUPPORT BAR AND BASE BAR 4" SHORTER THAN DISTANCE BETWEEEN LONGITUDINAL JOINTS AND PAVEMENT EDGE.

INSTALL STEEL PINS OF SUFFICIENT NUMBER LENGTH AND RIGIDITY TO PREVENT MOVEMENT OF JOINT STRUCTURE DURING CONSTRUCTION OPERATIONS.

No. 3 STEEL WIRE "U" LEGS, ONE ON EACH END OF EACH DOWEL BAR.

1-1/4" x 18" SMOOTH EPOXY COATED DOWEL BARS SPACED AT 12" C-C AND 6" FROM EDGE OF SLAB (SEE JOINT DETAIL ABOVE).

3/4" EXPANSION JOINT PREFORMED CORK, SELF-EXPANDING CORK, OR BITUMINOUS FIBER TYPE.

CITY OF GREEN BAY DEPARTMENT OF PUBLIC WORKS ENGINEERING DIVISION	CONCRETE PAVEMENT CONSTRUCTION, CONTRACTION AND EXPANSION JOINT	CITY OF GREEN BAY STANDARD SPECIFICATION 2020 EDITION

GENERAL NOTES:

1. THE CONTRACTOR SHALL INSTALL DRILLED NO. 6 TIE BARS ON 6:1 SKEW HORIZONTALLY. DIRECTION OF SKEW ALTERNATING WITH EACH SUCCESSIVE BAR. DRIVE SKEWED TIE BARS TO A DEPTH OF 6 INCHES AND TO SUCH A DIAMETER AS TO PROVIDE A TIGHT DRIVEN FIT.
2. USE AN ENGINEER– APPROVED BOND BREAKER. (E.G. RELEASE AGENT, CURING COMPOUND) FOR SINGLE LANE REPAIRS UP TO 15 FEET IN LENGTH.
3. APPLY A THIN UNIFORM COATING OF SURFACE TREATMENT TO THE FREE END OF DOWEL BARS TO PREVENT BONDING.

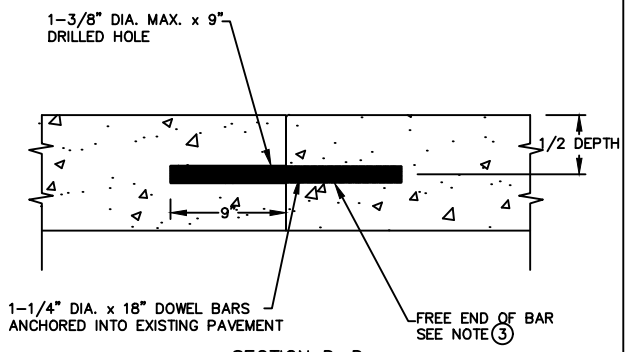

SECTION D–D
DOWEL BAR ANCHORING

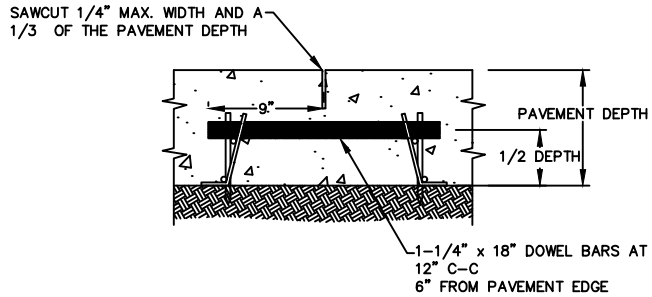

SECTION F–F
CONTRACTION JOINT

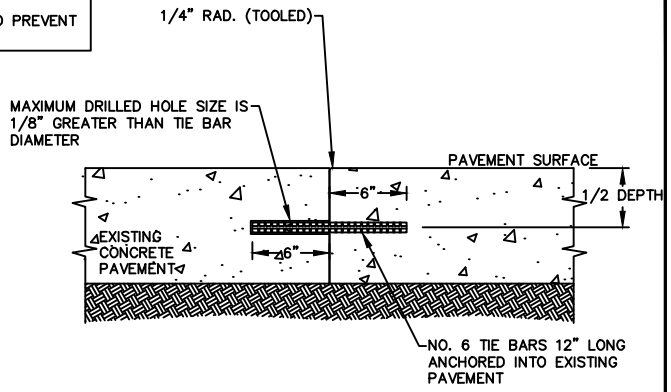

SECTION G–G
TIE BARS ANCHORED
INTO EXISTING PAVEMENT

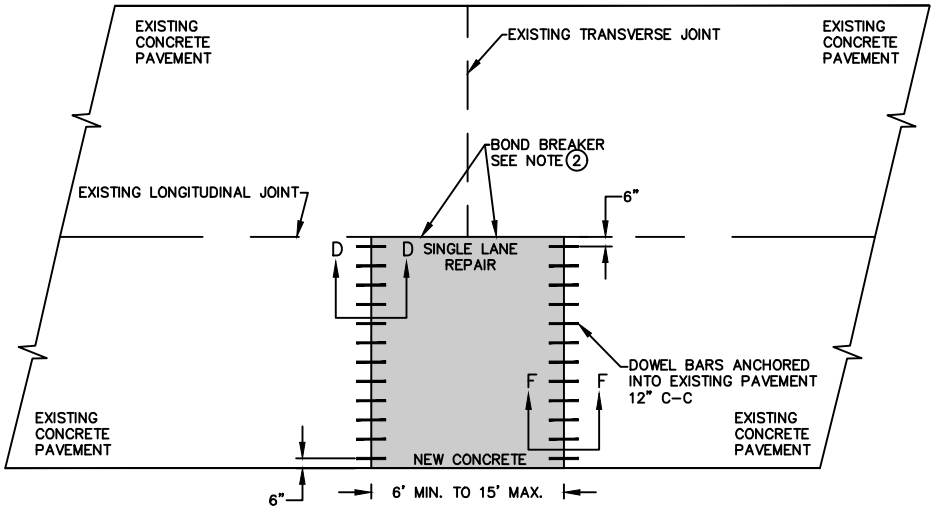

PLAN VIEW
SINGLE LANE CONCRETE PAVEMENT REPAIR

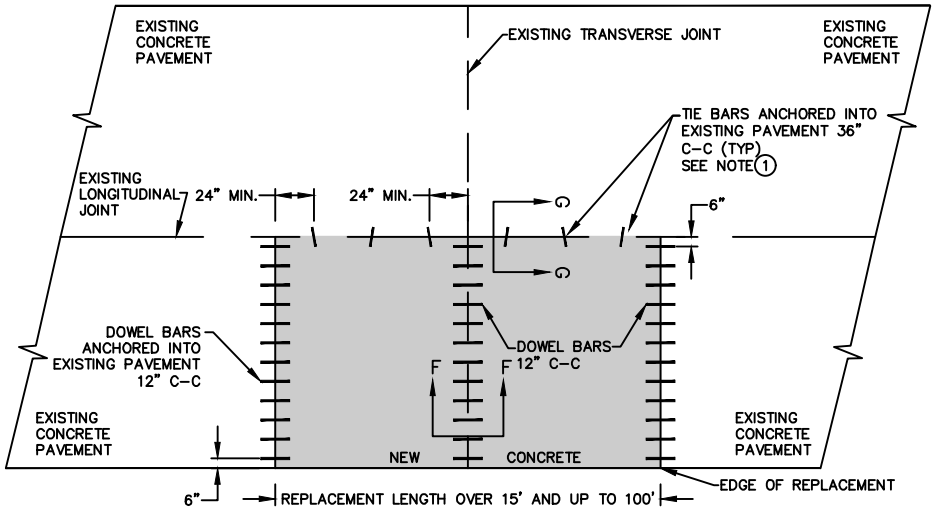

PLAN VIEW
SINGLE LANE CONCRETE PAVEMENT REPLACEMENT

CITY OF GREEN BAY
DEPARTMENT OF PUBLIC WORKS
ENGINEERING DIVISION

SINGLE LANE CONCRETE
PAVEMENT REPLACEMENT

CITY OF GREEN BAY
STANDARD SPECIFICATION
2020 EDITION

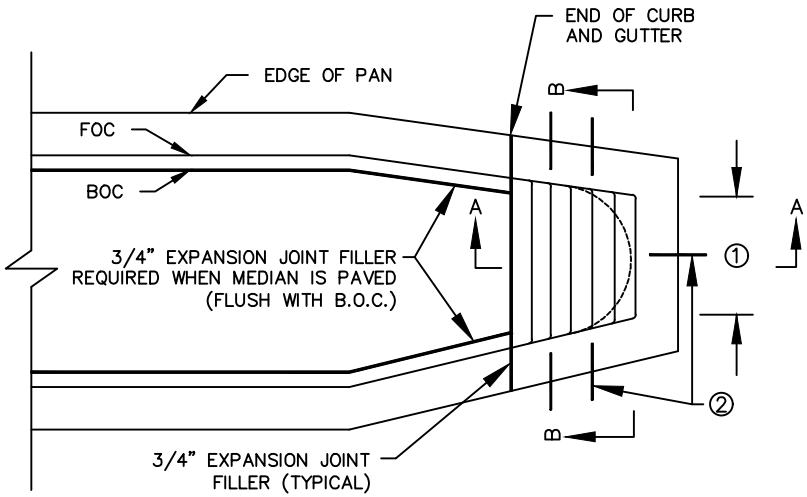

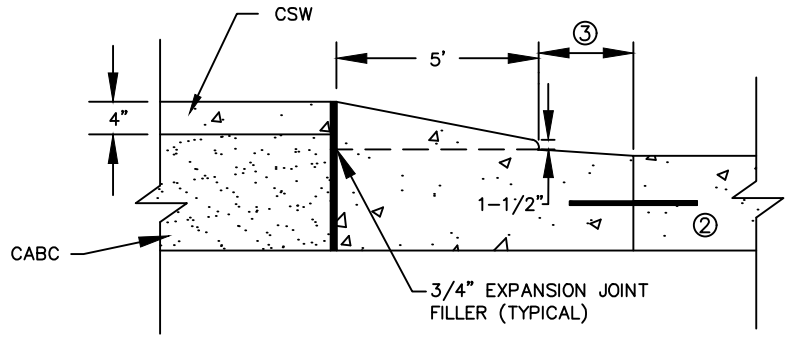

SECTION A – A

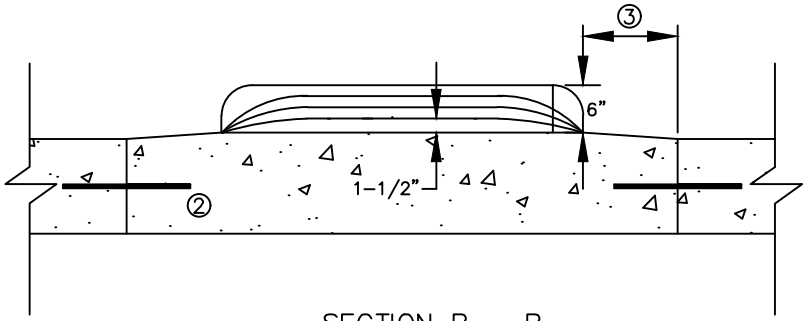

SECTION B – B

NOTES :

① SEE THE PLAN FOR MEDIAN NOSE WIDTH AND RADIUS (FOR ROUND NOSE ALTERNATE).

② TIE BARS OR PAVEMENT TIES REQUIRED IN NEW CONCRETE PAVEMENT OR CONCRETE BASE COURSE. TIE BARS SHALL BE NO. 4 x 2'–0" C–C SPACED AT 2'–0" C–C.

PAVEMENT TIES REQUIRED IN EXISTING CONCRETE BASE COURSE. PAVEMENT TIES SHALL BE NO. 6 X 1'–0" SPACED AT 3'–0" C–C INSTALLED AT A HORIZONTAL SKEW OF 6:1. THE DIRECTION OF SKEW SHALL ALTERNATE AFTER EVERY ONE OR TWO BARS.

③ WIDTH OF GUTTER TO MATCH ADJACENT GUTTER OR AS SPECIFIED IN THE PLAN.

CITY OF GREEN BAY DEPARTMENT OF PUBLIC WORKS ENGINEERING DIVISION	CONCRETE MEDIAN SLOPED NOSE	CITY OF GREEN BAY STANDARD SPECIFICATION 2020 EDITION

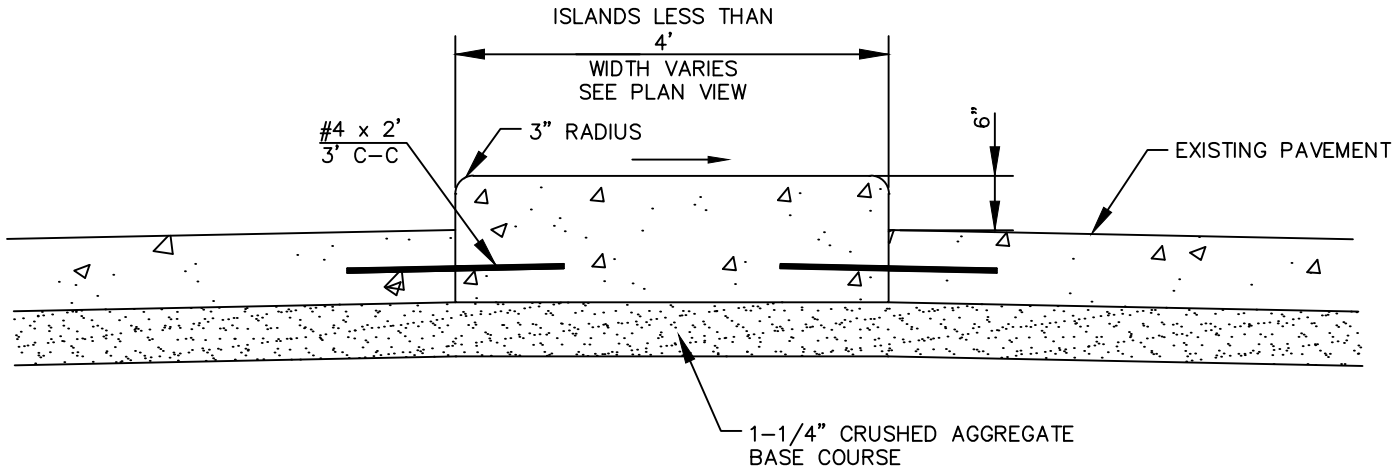

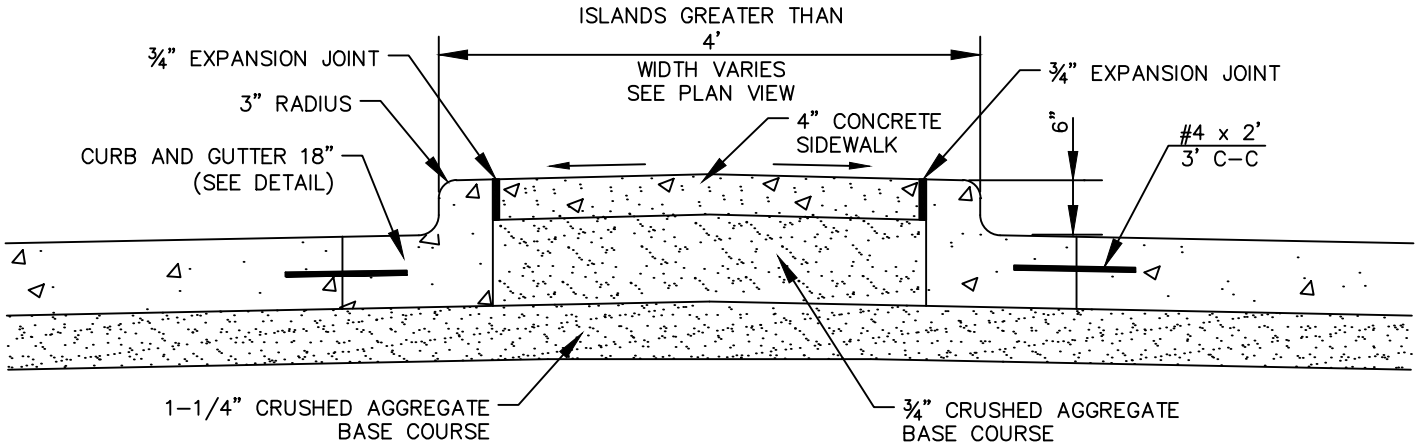

NOTE:

AREA OF CONCRETE PAVEMENT DIRECTLY UNDER TRAFFIC ISLAND CONSIDERED INCIDENTAL AND INCLUDED IN THE PAYMENT FOR TRAFFIC ISLAND

CITY OF GREEN BAY DEPARTMENT OF PUBLIC WORKS ENGINEERING DIVISION	TRAFFIC ISLAND DETAIL ON NEW PAVEMENT	CITY OF GREEN BAY STANDARD SPECIFICATION 2020 EDITION

—NORMAL—

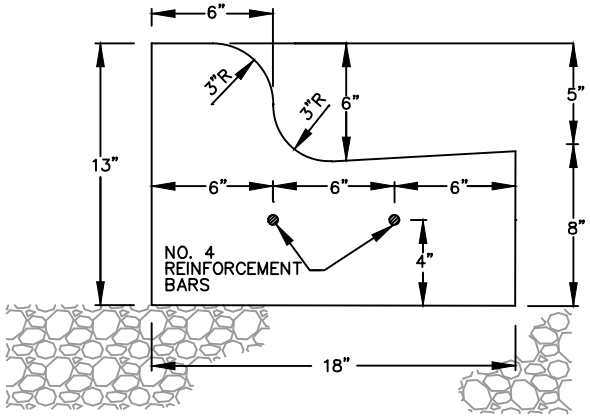

—AT DRIVEWAY OPENING & CURB RAMPS—

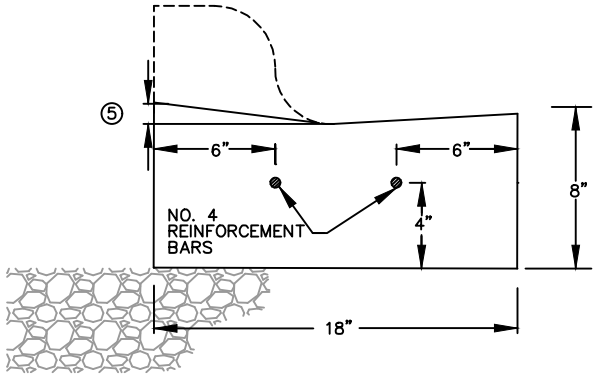

NOTES:

① CONTRACTION JOINTS SHALL BE SAWED EVERY 15' MAXIMUM OR AS DESIGNATED BY ENGINEER IN FIELD.

② EXPANSION JOINTS (3/4") SHALL BE PLACED AT END OF RADII, AND AS DESIGNATED BY ENGINEER IN FIELD.

③ NO. 4 REINFORCEMENT BARS SHALL BE 20' LONG WITH A 3/4" EXPANSION TUBE REQUIRED ON ONE END AT EXPANSION JOINTS.

④ NO. 4 REINFORCEMENT BARS SHALL BE OVERLAPPED A MINIMUM OF 1'.

⑤ 1-1/2" AT DRIVEWAY OPENINGS, 1/2" AT CURB RAMPS.

STANDARD CURB AND GUTTER 18"

CITY OF GREEN BAY DEPARTMENT OF PUBLIC WORKS ENGINEERING DIVISION	CURB AND GUTTER SECTIONS – 18"	CITY OF GREEN BAY STANDARD SPECIFICATION 2020 EDITION

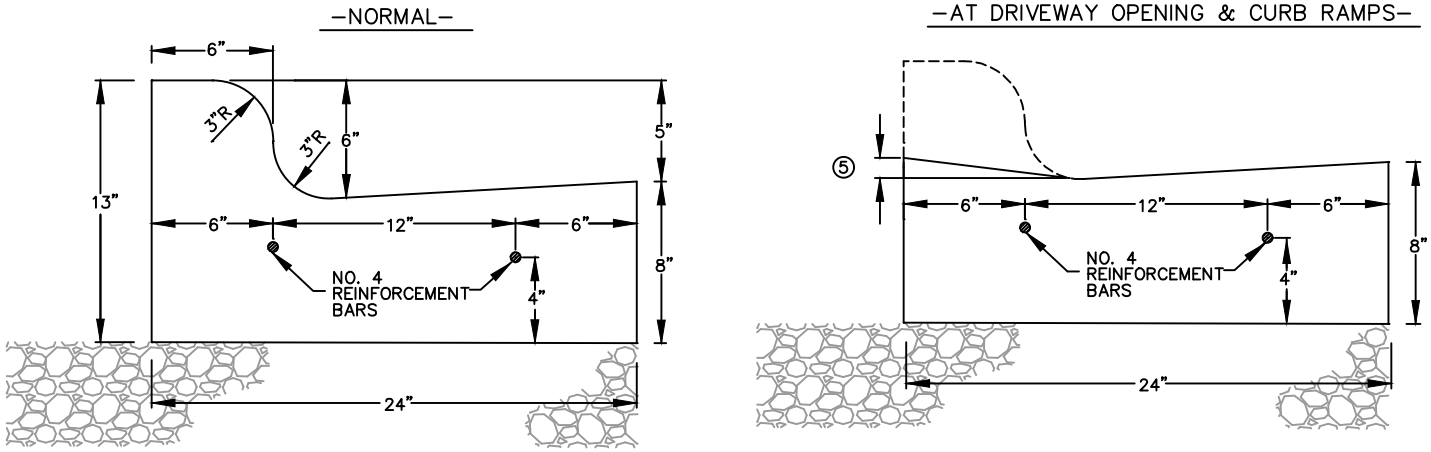

NOTES:

① CONTRACTION JOINTS SHALL BE SAWED EVERY 15' MAXIMUM OR AS DESIGNATED BY ENGINEER IN FIELD.

② EXPANSION JOINTS (3/4") SHALL BE PLACED AT END OF RADII, AND AS DESIGNATED BY ENGINEER IN FIELD.

③ NO. 4 REINFORCEMENT BARS SHALL BE 20' LONG WITH A 3/4" EXPANSION TUBE REQUIRED ON ONE END AT EXPANSION JOINTS.

④ NO. 4 REINFORCEMENT BARS SHALL BE OVERLAPPED A MINIMUM OF 1'.

⑤ 1-1/2" AT DRIVEWAY OPENINGS, 1/2" AT CURB RAMPS.

STANDARD CURB AND GUTTER 24"

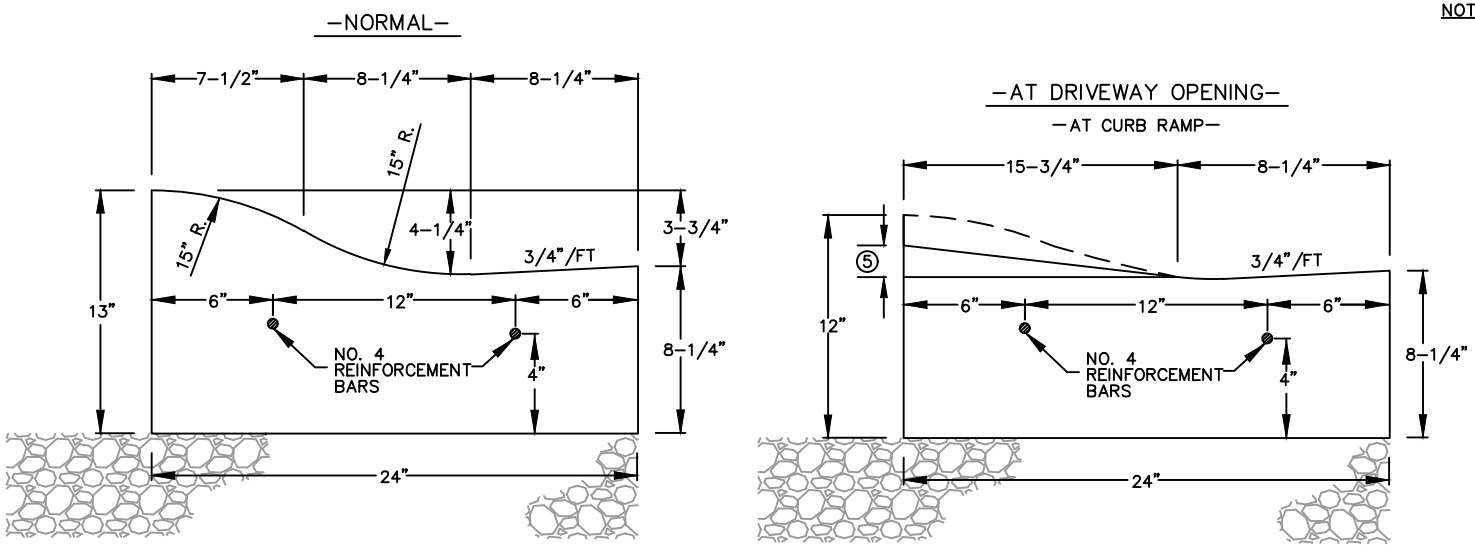

NOTES:

① CONTRACTION JOINTS SHALL BE SAWED EVERY 15' MAXIMUM OR AS DESIGNATED BY ENGINEER IN FIELD.

② EXPANSION JOINTS (3/4") SHALL BE PLACED AT END OF RADII, AND AS DIRECTED BY THE ENGINEER IN FIELD.

③ NO. 4 REINFORCEMENT BARS SHALL BE 20' LONG WITH A 3/4" EXPANSION TUBE REQUIRED ON ONE END AT EXPANSION JOINTS.

④ NO. 4 REINFORCEMENT BARS SHALL BE OVERLAPPED A MINIMUM OF 1'.

⑤ 1-1/2" AT DRIVEWAY OPENINGS, 1/2" AT CURB RAMPS.

ROLLED CURB AND GUTTER, 24"

CITY OF GREEN BAY DEPARTMENT OF PUBLIC WORKS ENGINEERING DIVISION	CURB AND GUTTER SECTIONS – 24"	CITY OF GREEN BAY STANDARD SPECIFICATION 2020 EDITION

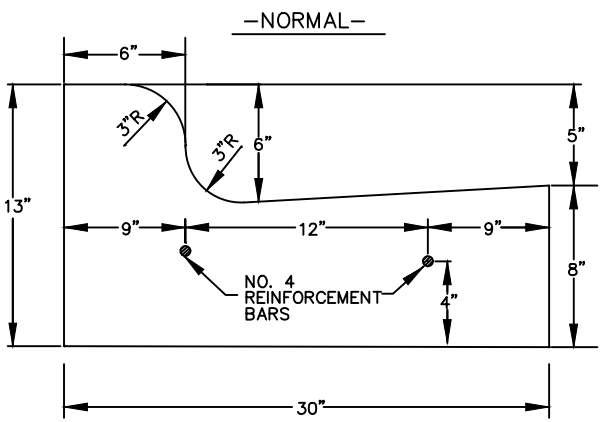

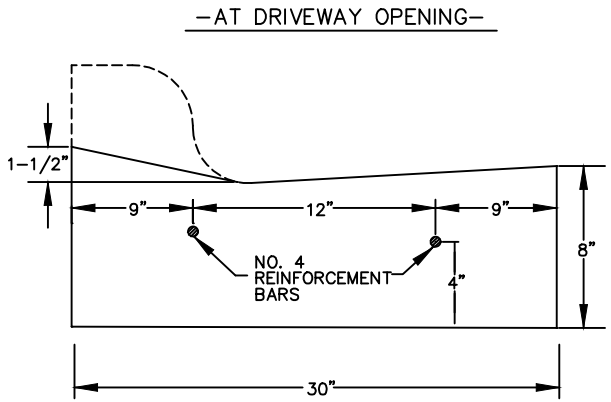

CURB AND GUTTER 30"

NOTES:

1. CONTRACTION JOINTS SHALL BE EVERY 15' MAXIMUM OR DESIGNATED BY ENGINEER IN FIELD.
2. 6"x6" EXPANSION JOINTS (3/4") SHALL BE PLACED AT CURB HEAD AT END OF RADII.
3. NO. 4 REINFORCEMENT BARS SHALL BE 20' LONG WITH A 3/4" EXPANSION TUBE REQUIRED ON ONE END AT EXPANSION JOINTS
4. NO. 4 REINFORCEMENT BARS SHALL BE OVERLAPPED A MINIMUM OF 1'.

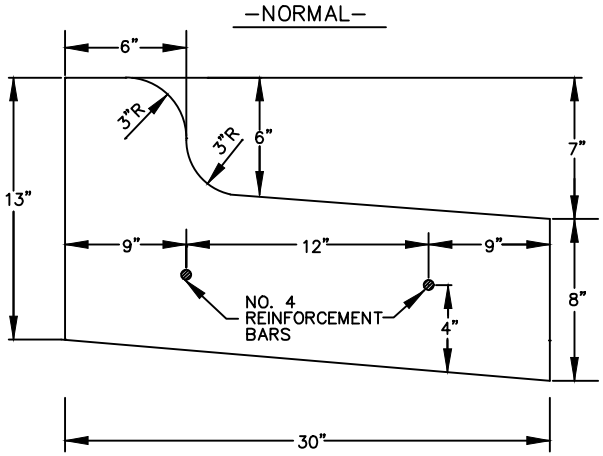

REJECT CURB AND GUTTER 30"

CITY OF GREEN BAY DEPARTMENT OF PUBLIC WORKS ENGINEERING DIVISION	CURB AND GUTTER SECTIONS - 30"	CITY OF GREEN BAY STANDARD SPECIFICATION 2020 EDITION

GENERAL NOTE:

DETAILS OF CONSTRUCTION, MATERIALS, AND WORKMANSHIP NOT SHOWN ON THIS DRAWING SHALL CONFORM TO PERTINENT REQUIREMENTS OF THE STANDARD SPECIFICATIONS AND APPLICABLE PROVISIONS.

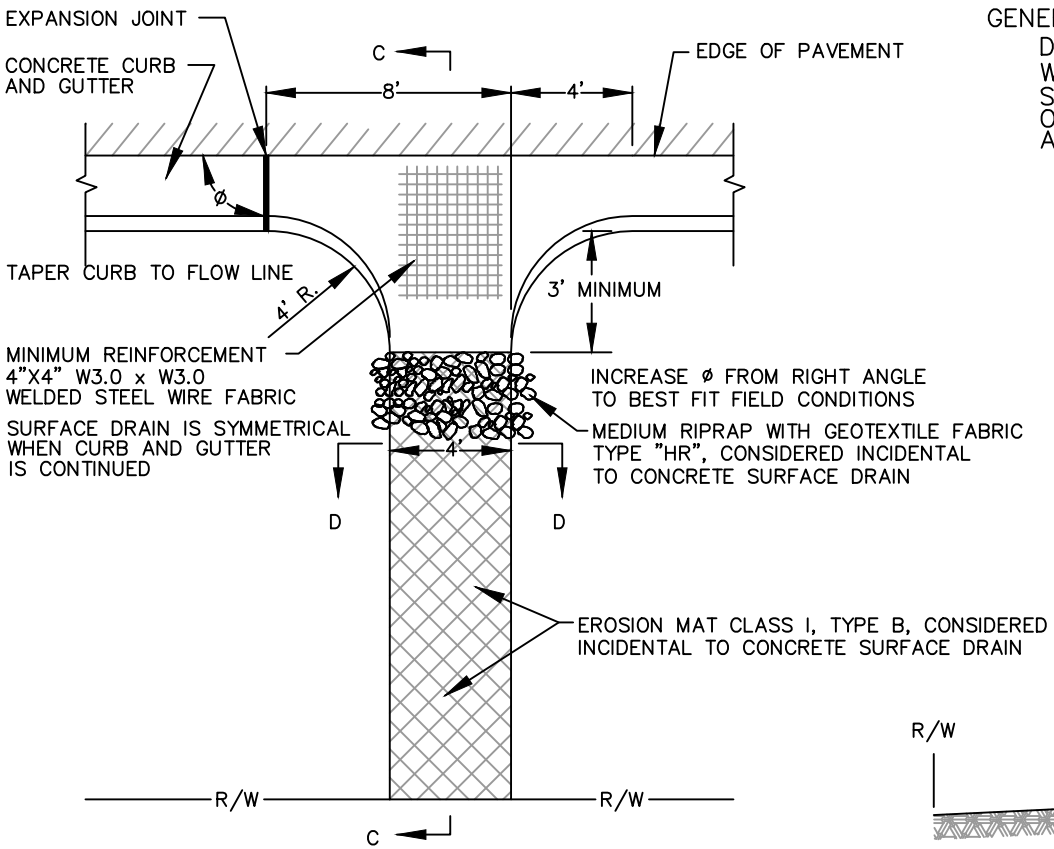

CONCRETE SURFACE DRAIN

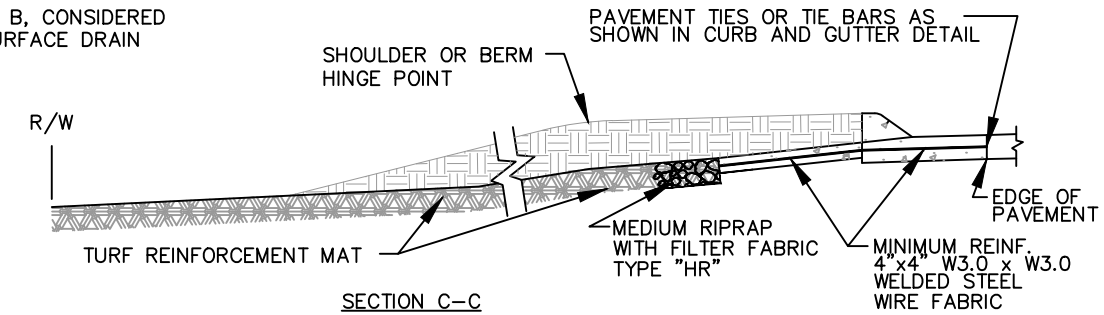

SECTION C–C

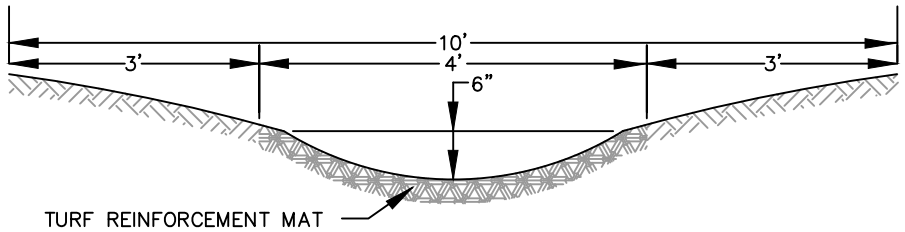

SECTION D–D

CITY OF GREEN BAY DEPARTMENT OF PUBLIC WORKS ENGINEERING DIVISION	CONCRETE SURFACE DRAIN	CITY OF GREEN BAY STANDARD SPECIFICATION 2020 EDITION

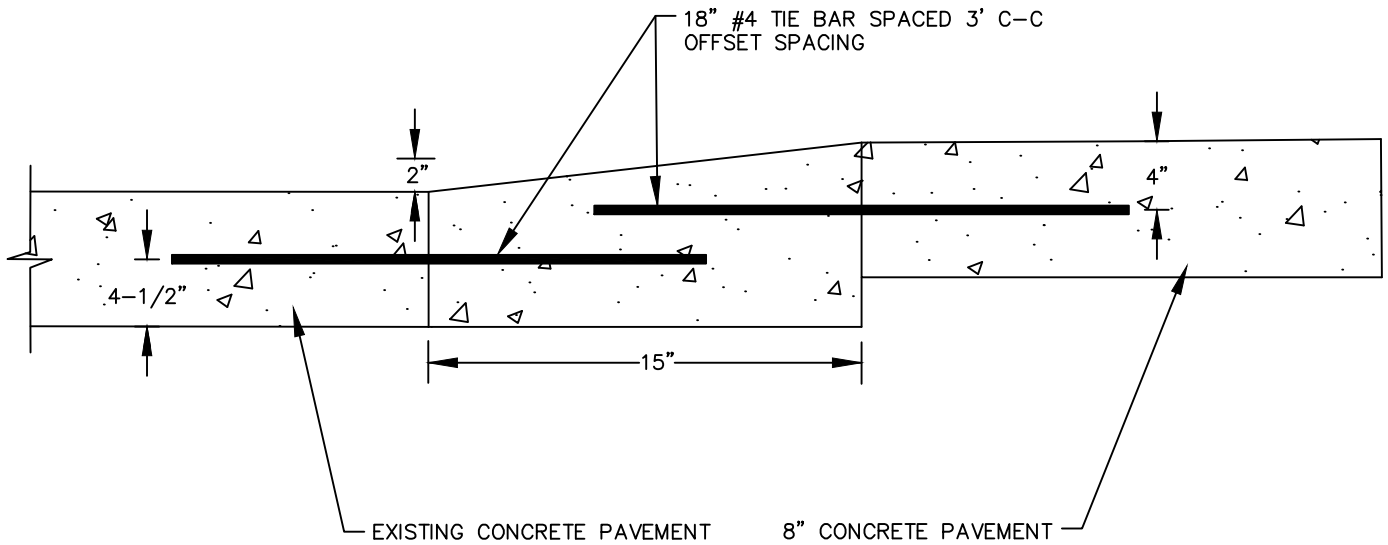

CITY OF GREEN BAY
DEPARTMENT OF PUBLIC WORKS
ENGINEERING DIVISION

MOUNTABLE MEDIAN CURB

CITY OF GREEN BAY
STANDARD SPECIFICATION
2020 EDITION

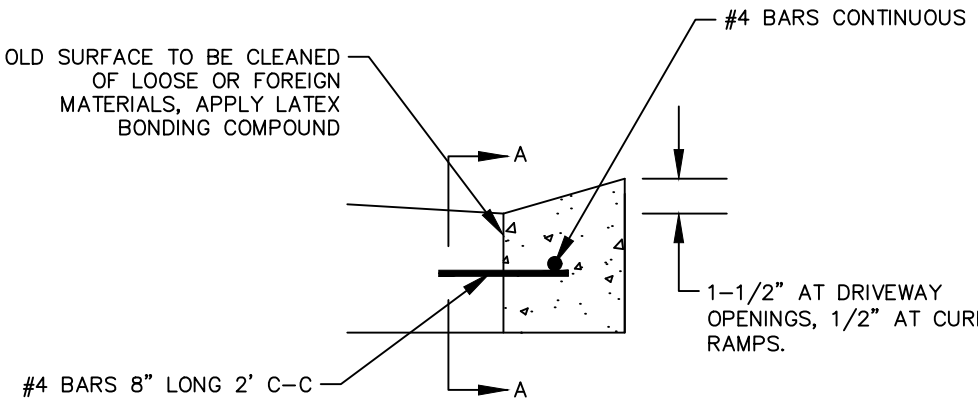

-TYPICAL SECTION AT DRIVEWAY OPENING AND CURB RAMPS-

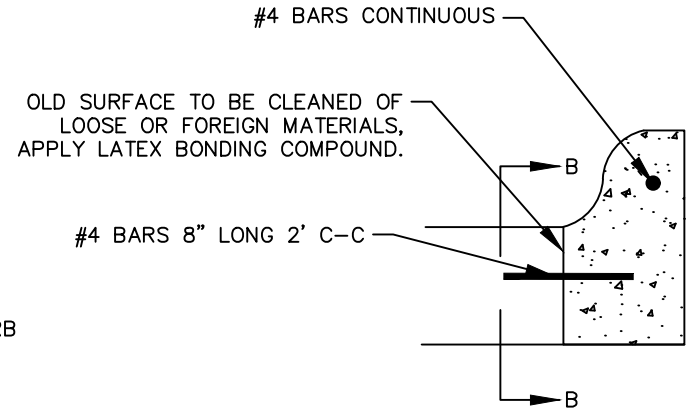

NORMAL CROSS-SECTION

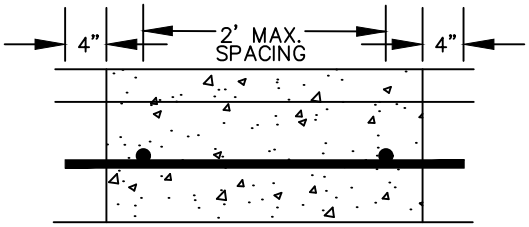

SECTION A-A

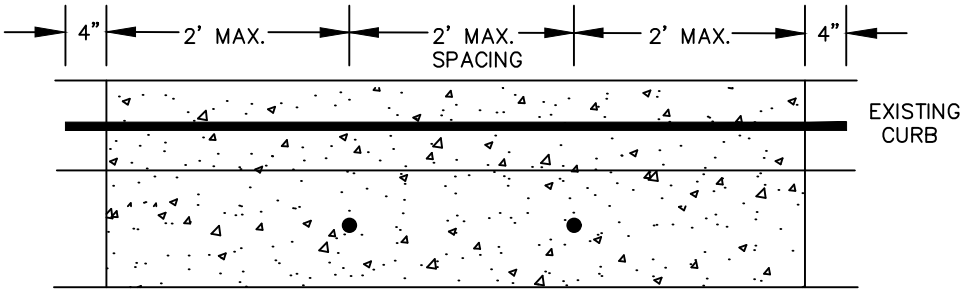

SECTION B-B

CITY OF GREEN BAY DEPARTMENT OF PUBLIC WORKS ENGINEERING DIVISION	RECONSTRUCT CURB	CITY OF GREEN BAY STANDARD SPECIFICATION 2020 EDITION

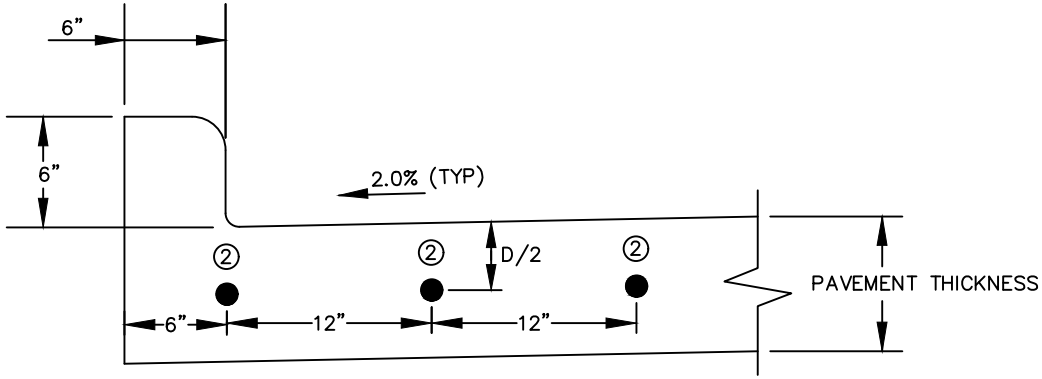

—NORMAL—

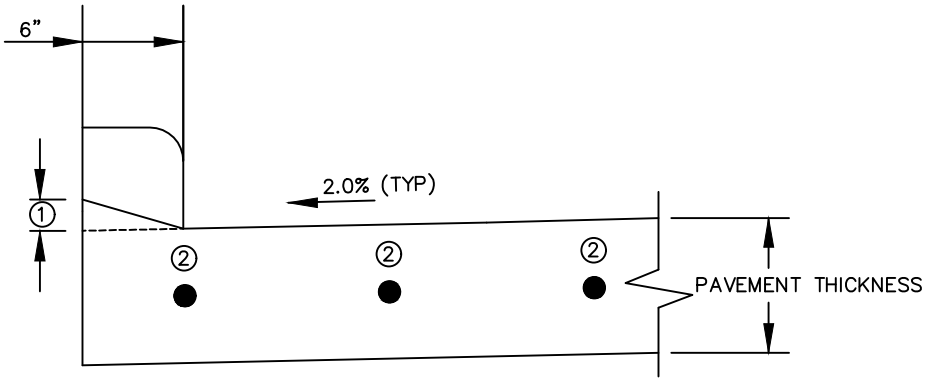

—AT DRIVEWAY OPENING & CURB RAMPS—

NOTES:

- CONTRACTION JOINTS SHALL BE SAWED EVERY 15' MAXIMUM OR AS DESIGNATED BY ENGINEER IN FIELD.
- 6"x6" EXPANSION JOINTS (3/4") SHALL BE PLACED AT CURB HEAD AT END OF RADII.

① 1-1/2" AT DRIVEWAY OPENINGS, 1/2" AT CURB RAMPS.

② 1-1/4"x18" SMOOTH EPOXY COATED DOWEL BARS NECESSARY AT CONTRACTION JOINTS (TYPICAL ACROSS PAVEMENT SECTION)

CITY OF GREEN BAY DEPARTMENT OF PUBLIC WORKS ENGINEERING DIVISION	INTEGRAL CURB	CITY OF GREEN BAY STANDARD SPECIFICATION 2020 EDITION

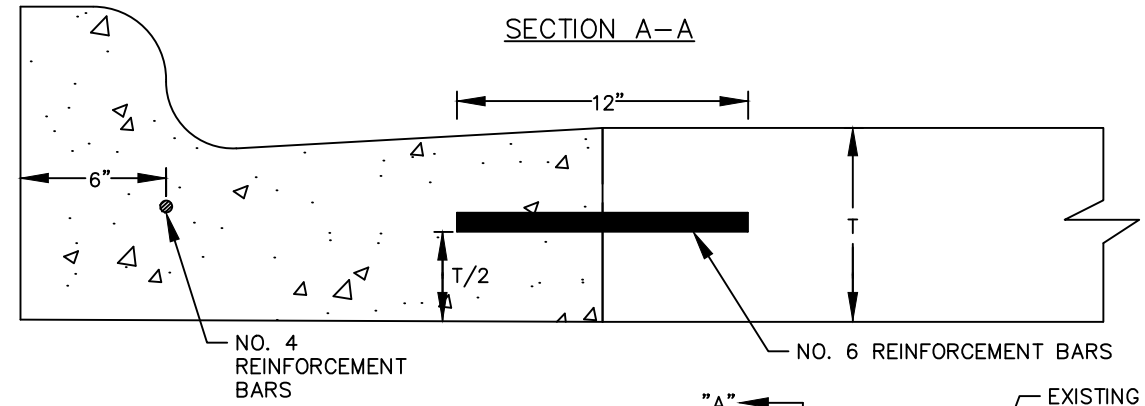

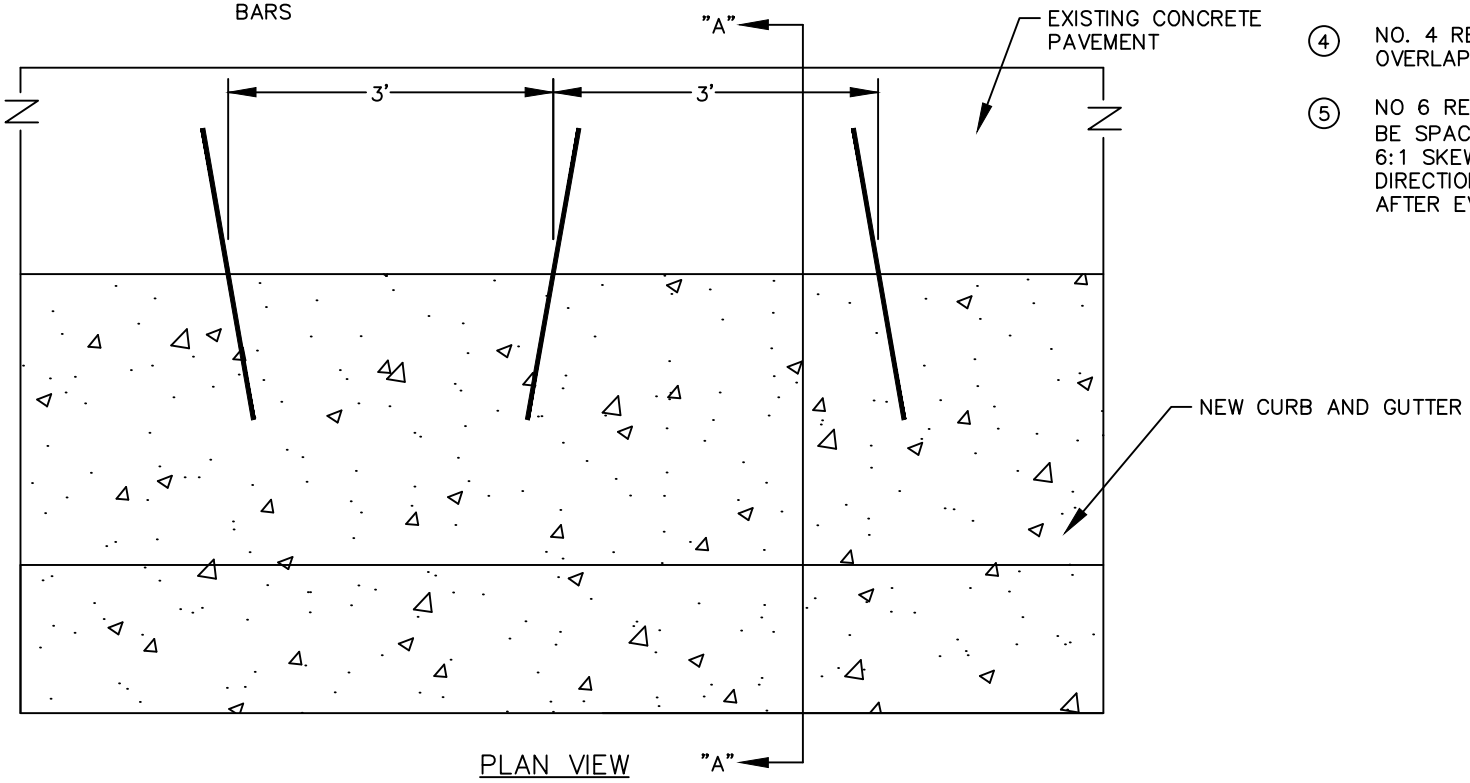

NOTES:

1. CONTRACTION JOINTS SHALL BE SAWED EVERY 15' MAXIMUM OR DESIGNATED BY ENGINEER IN FIELD.
2. 6"x6" EXPANSION JOINTS (3/4") SHALL BE PLACED AT CURB HEAD AT END OF RADII.
3. NO. 4 REINFORCEMENT BARS TO BE 20' LONG WITH A 3/4" EXPANSION TUBE REQUIRED ON ONE END AT EXPANSION JOINTS.
4. NO. 4 REINFORCEMENT BARS TO BE OVERLAPPED A MINIMUM OF 1 FOOT.
5. NO 6 REINFORCEMENT BARS SHALL BE SPACED 3' C–C, INSTALLED ON 6:1 SKEW HORIZONTALLY. DIRECTION OF SKEW ALTERNATING AFTER EVERY ONE OR TWO BARS.

CITY OF GREEN BAY DEPARTMENT OF PUBLIC WORKS ENGINEERING DIVISION	TACK ON CURB FOR CONCRETE PAVEMENT	CITY OF GREEN BAY STANDARD SPECIFICATION 2020 EDITION

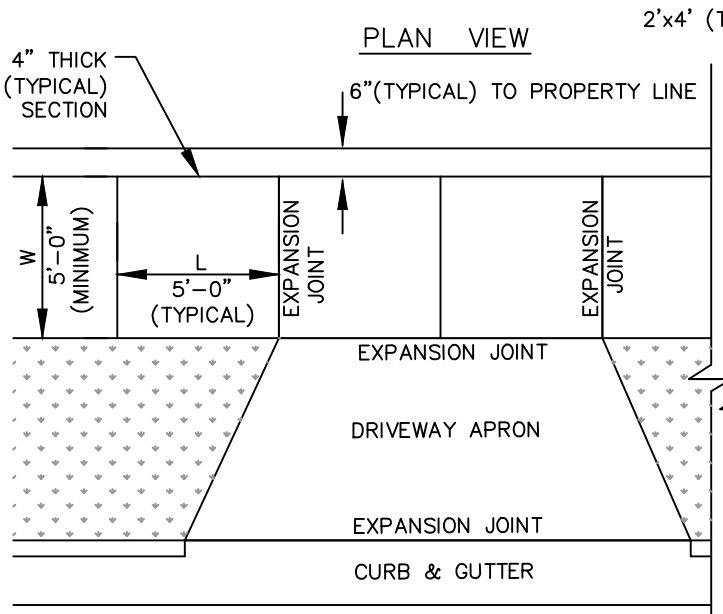

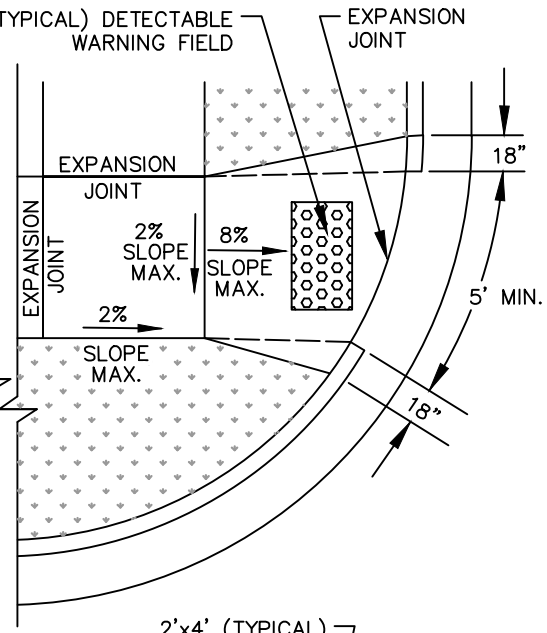

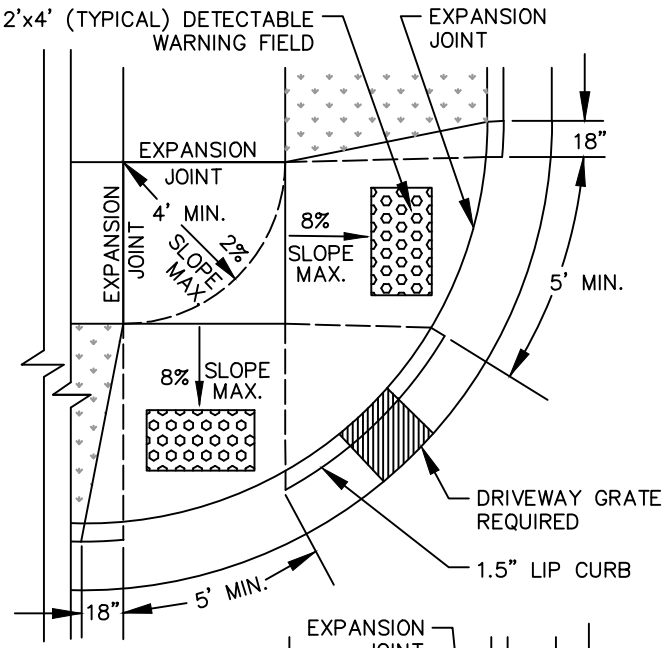

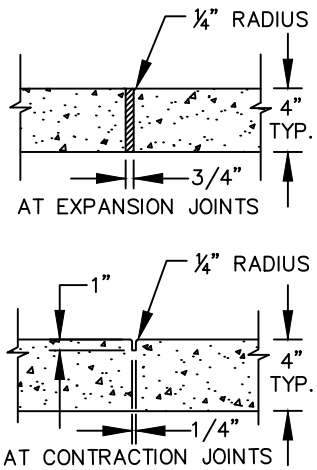

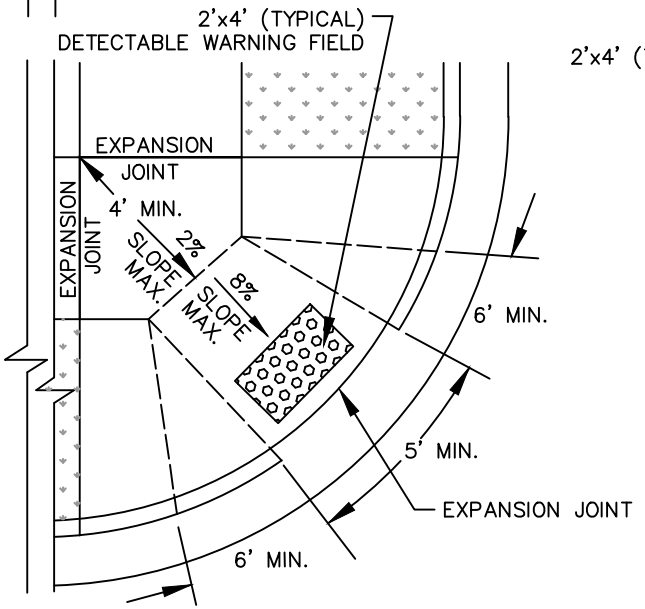

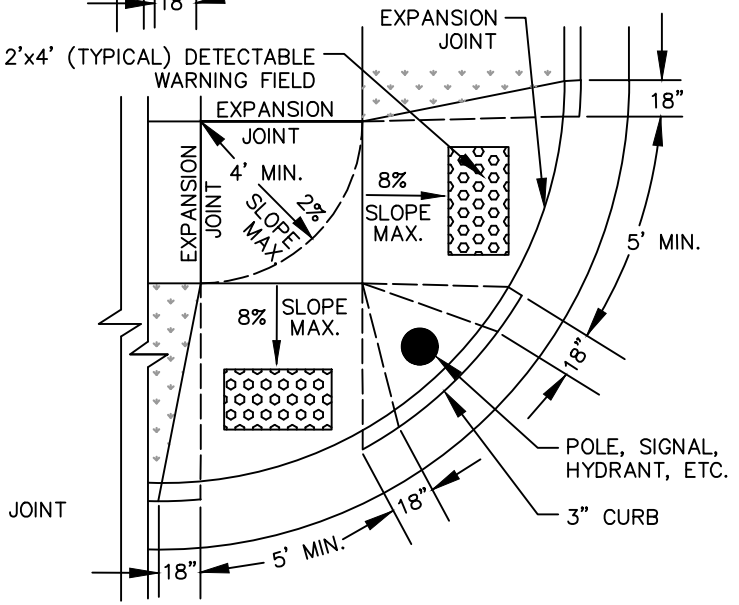

SEE SHEET 2 OF 2 FOR NOTES

CITY OF GREEN BAY
DEPARTMENT OF PUBLIC WORKS
ENGINEERING DIVISION

SIDEWALK & CURB RAMP CONSTRUCTION

CITY OF GREEN BAY
STANDARD SPECIFICATION
2020 EDITION

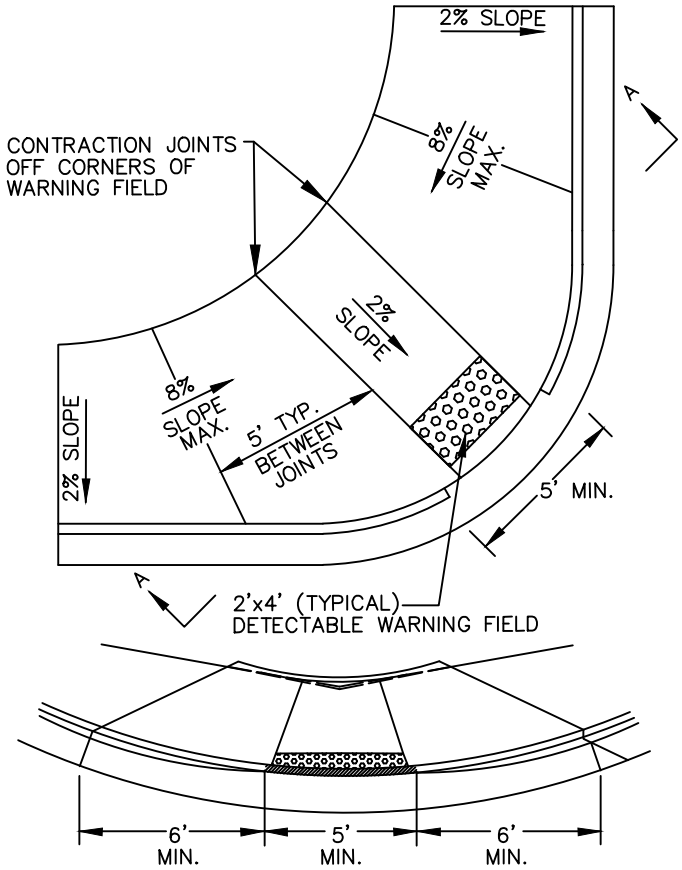

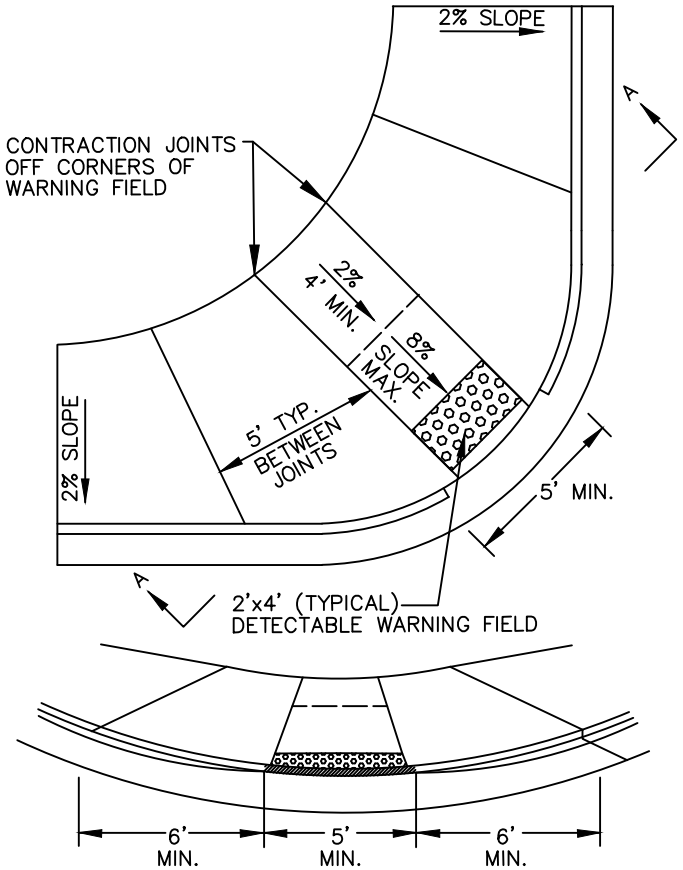

NOTES:

1) EXPANSION JOINTS SHALL BE PLACED AT A MAXIMUM SPACING OF 120', AT THE BACK OF CURB, AT THE INTERSECTION OF SIDEWALKS, AND AT ALL CHANGES IN DEPTH OF SIDEWALK, UNLESS OTHERWISE APPROVED BY THE ENGINEER.

2) CURB RAMPS ARE REQUIRED IN EACH QUADRANT OF ALL INTERSECTIONS, WHERE SIDEWALKS ARE PRESENT.

3) THE EDGES OF SIDEWALK ALONG FORMS AND JOINTS SHALL BE ROUNDED WITH AN EDGER OF 1/4" RADIUS.

4) ALL SIDEWALK ADJACENT TO CURB IN RADIUS SHALL BE 6" THICK IN RESIDENTIAL AND 8" THICK IN COMMERICAL OR INDUSTRIAL AREAS.

5) THE AREA BETWEEN TWO RAMPS MAY BE GRASS WITH THE APPROVAL OF THE ENGINEER.

6) PLACE NEAREST EDGE OF DETECTABLE WARNING FIELD 6" FROM THE EXPANSION FELT AT THE BACK OF CURB.

7) THE CONTRACTOR SHALL NOT JOINT THE CONCRETE SIDEWALK IN SUCH A WAY THAT CREATES NARROW SLIVERS LESS THAN 1 FOOT IN WIDTH.

8) THE CONTRACTOR SHALL NOT CREATE ACUTE ANGLES WITH JOINTING WITHOUT APPROVAL OF THE ENGINEER.

9) DETECTABLE WARNING FIELDS SHALL HAVE 3/8-INCH CARRIAGE BOLTS INSTALLED IN THE SURFACE HOLES. THE BOLT SHALL BE A MINIMUM OF 3-INCHES LONG.

10) LIP CURB IN THE PEDESTRIAN RAMP OPENING SHALL BE CONSTRUCTED AT A HEIGHT OF ONE-HALF INCH (1/2") ABOVE THE GUTTER

CITY OF GREEN BAY DEPARTMENT OF PUBLIC WORKS ENGINEERING DIVISION	SIDEWALK & CURB RAMP CONSTRUCTION (CONTINUED)	CITY OF GREEN BAY STANDARD SPECIFICATION 2020 EDITION

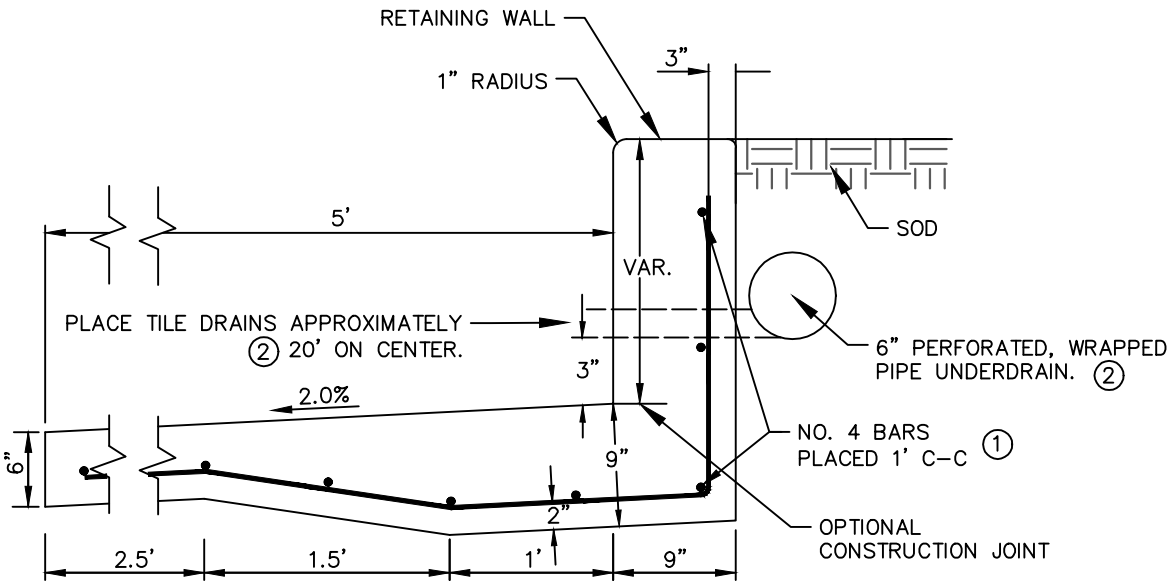

SIDEWALK RETAINING WALL >9"

(MAXIMUM HEIGHT 3')

① ALL REINFORCEMENT SHALL BE INCIDENTAL TO SIDEWALK CURB RETAINING WALL.

② PIPE UNDERDRAIN AND TILE DRAINS ARE REQUIRED WHEN CALLED FOR IN THE CONTRACT SPECIAL PROVISIONS.

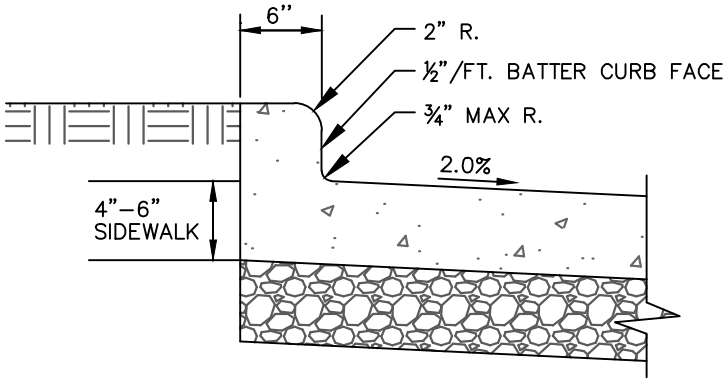

SIDEWALK WITH INTEGRAL CURB

(MAXIMUM HEIGHT 9")

CITY OF GREEN BAY DEPARTMENT OF PUBLIC WORKS ENGINEERING DIVISION	SIDEWALK RETAINING WALL AND SIDEWALK CURB	CITY OF GREEN BAY STANDARD SPECIFICATION 2020 EDITION

NOTES:

ALL RAILING PIPE ARE TO BE CLEANED, PRIMED AND PAINTED WITH AN EPOXY SYSTEM FEDERAL COLOR NO. 27038

HOLD PIPE 1/16" ABOVE BASE PLATE TO ALLOW POST AND BASE PLATE TO BE WELDED TOGETHER. PLACE PIPE POST VERTICAL AND CENTERED ON BASE PLATE.

LANDING AREA MUST PROVIDE FOR RAIL OVERHANG.

RAILING POST SPACING SHALL VARY WITH TREAD LENGTH.

BASE PLATE SHALL CONFORM TO ASTM DESIGNATION A709 GRADE 36.

SHIM AS REQUIRED TO OBTAIN VERTICAL POSTS. FILL EXPOSED OPENINGS BETWEEN SHIMS, BASE PLATE, TOP OF CONCRETE, POST ANCHOR HOLES WITH NON-STAINING BLACK NON-BITUMINOUS JOINT SEALER.

RAILING TO BE PLACED ON LEFT ASCENDING SIDE OF STEPS ONLY.

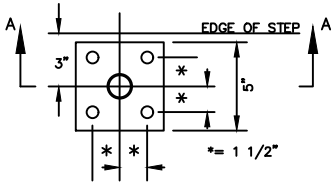

PLAN VIEW

FOUR 11/16" HOLES. 5/8" CONCRETE MASONRY ANCHORS, TYPE S (EPOXY). MIN. PULLOUT CAPACITY OF 3.6 KIPS. EMBED A MIN. 4-INCHES.

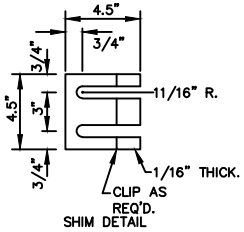

SHIM DETAIL

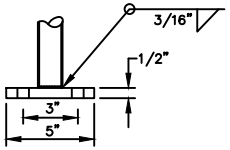

SECTION A-A
FLANGE DETAIL

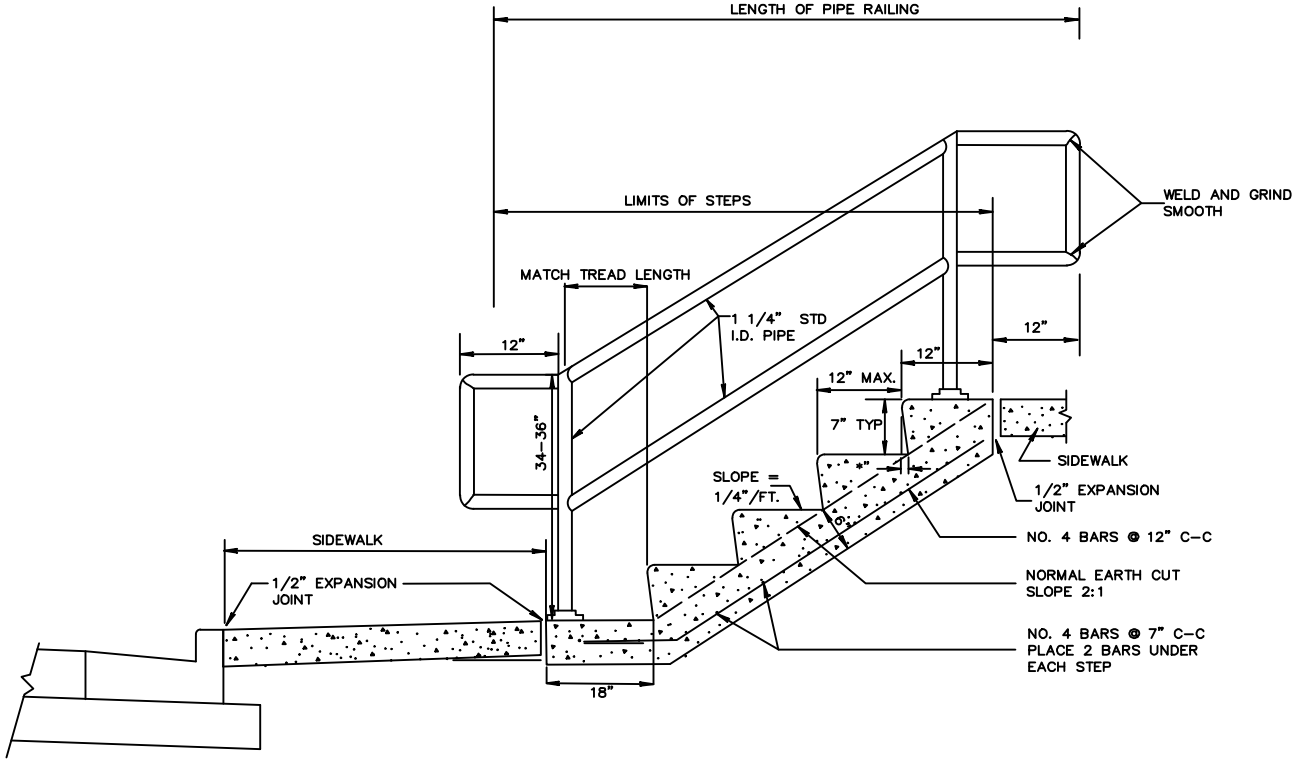

NOTE:
STEEL REINFORCEMENT NOT REQUIRED ON STEPS WITH 2 RISERS OR LESS

MINIMUM WIDTH OF STEP IS 4 FEET.

CONSTRUCT FOOTING ON NATIVE COMPACTED SOILS.

FILL VOID UNDER STEPS WITH 3/4" CRUSHED AGGREGATE BASE COURSE

CITY OF GREEN BAY
DEPARTMENT OF PUBLIC WORKS
ENGINEERING DIVISION

STEP

CITY OF GREEN BAY
STANDARD SPECIFICATION
2020 EDITION

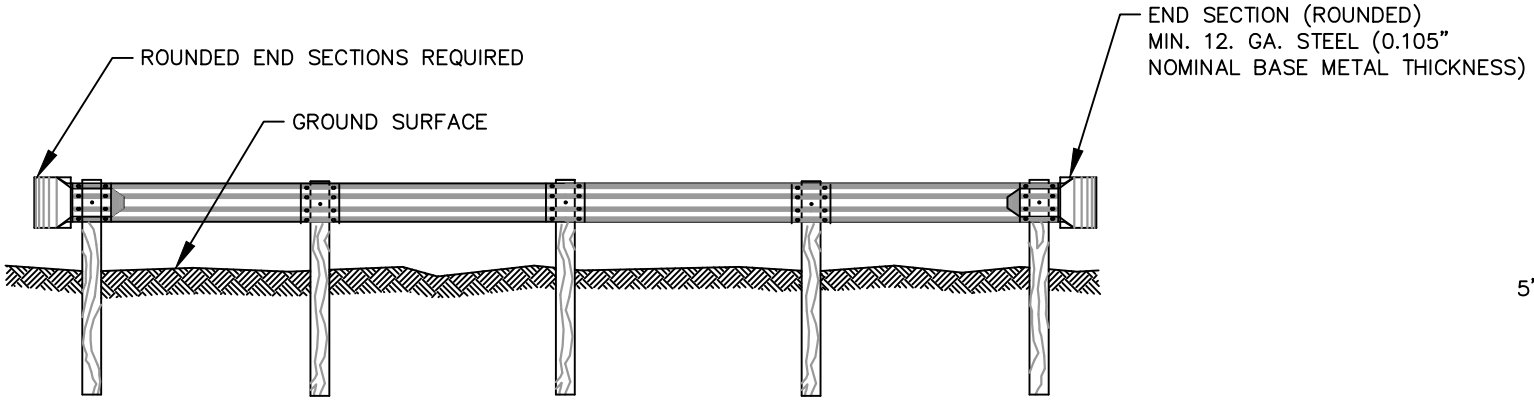

FRONT ELEVATION

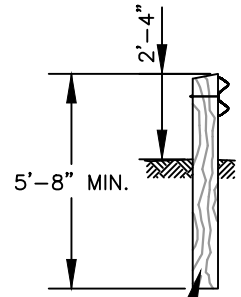

SAWED TREATED TIMBER POSTS 6" x 8" x 6' SHALL BE FURNISHED AND PLACED INACCORDANCE WITH THE STANDARD SPECIFICATIONS IF POST TOPS ARE SAWED OR CUT IN FIELD SUCH CUT SURFACES SHALL BE PAINTED (2) COATS OF CREOSOTE FOLLOWING ERECTION.

END ELEVATION

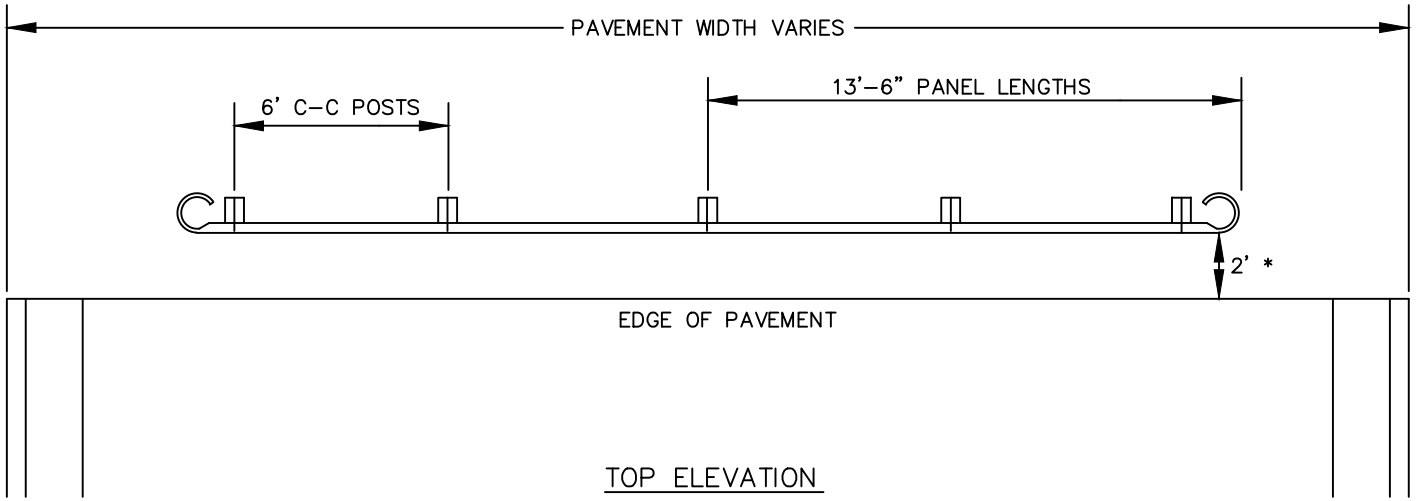

TOP ELEVATION

GENERAL NOTES

DETAILS OF CONSTRUCTION MATERIALS AND WORKMANSHIP NOT SHOWN ON THIS DRAWING SHALL CONFORM TO THE STANDARD SPECIFICATIONS AND THE APPLICABLE SPECIAL PROVISIONS.

* IF ALONG CURB AND GUTTER, FACE OF BEAM GUARD SHALL BE AT BACK OF CURB.

CITY OF GREEN BAY DEPARTMENT OF PUBLIC WORKS ENGINEERING DIVISION	STEEL PLATE BEAM GUARD CLASS B	CITY OF GREEN BAY STANDARD SPECIFICATION 2020 EDITION

Division 7 Detail Drawings

Streetlight Underground Service

Type 1 Base

Type 2 Base

Type 3 Base

Type 4 Base

Type 5 Base

Deco Base

Electrical Service Meter Breaker Pedestal

NOTE: INSTALL SHORTING CAPS IN PHOTOCELL SOCKETS ON LIGHTING RELAY ENCLOSURES. INSTALL ONE FLUSH-MOUNT PHOTOCELL ON UPPER NORTH SIDE OF FIBERGLASS ENCLOSURE AND CONNECT TO BOTH RELAYS.

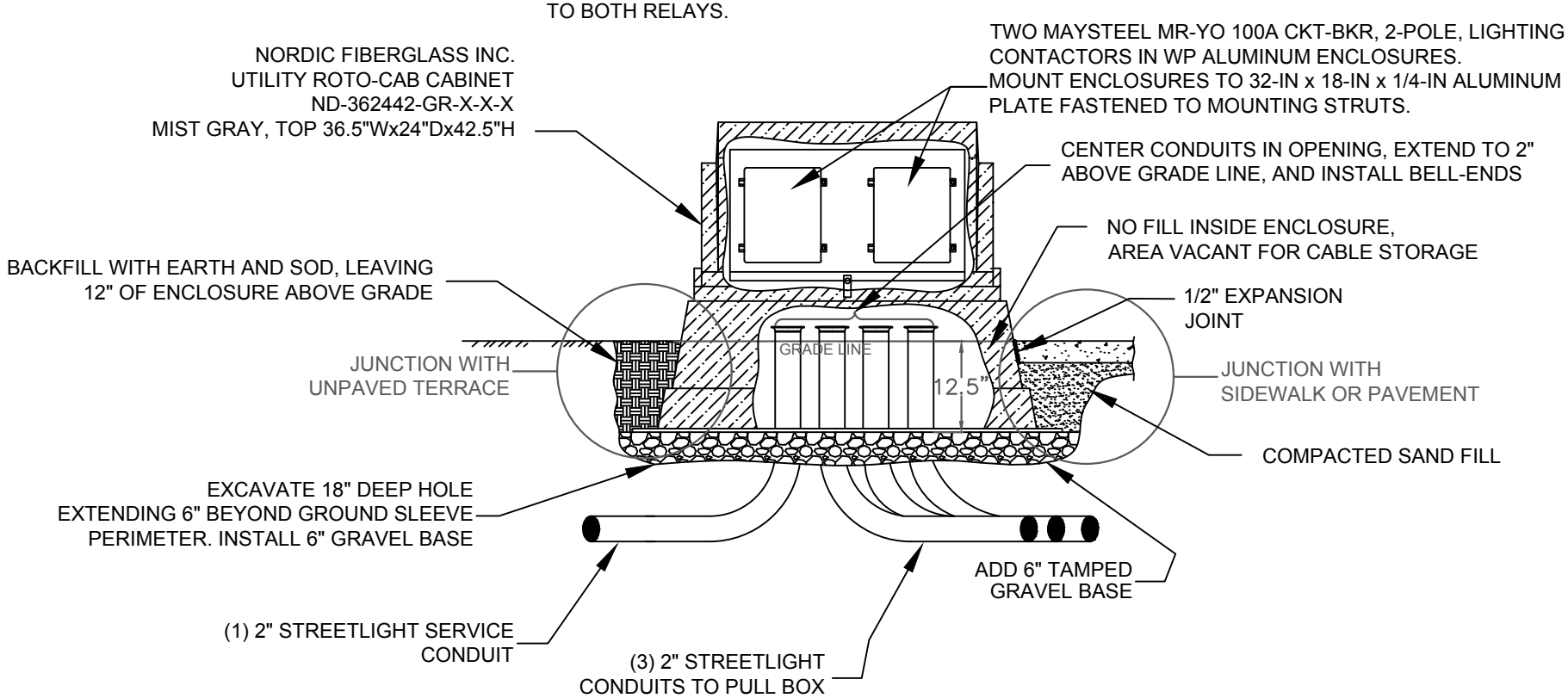

CITY OF GREEN BAY DEPARTMENT OF PUBLIC WORKS ENGINEERING DIVISION	STREETLIGHT UNDERGROUND SERVICE	CITY OF GREEN BAY STANDARD SPECIFICATION 2020 EDITION

NOTES :

1. LOCATION OF BASE SHALL BE A MINIMUM OF 30" FROM BACK OF CURB TO ℄ OF BASE AND 30" FROM END OF RADIUS.
2. TOP OF BASE TO BE AT CURB GRADE PLUS 1" PLUS 1/4" PER FOOT BEHIND CURB.
3. ANCHOR BOLT SQUARE SHALL BE ORIENTED PARALLEL TO THE ROADWAY.
4. SEE CONDUIT LAYOUT FOR PROPER CONDUIT SIZE.

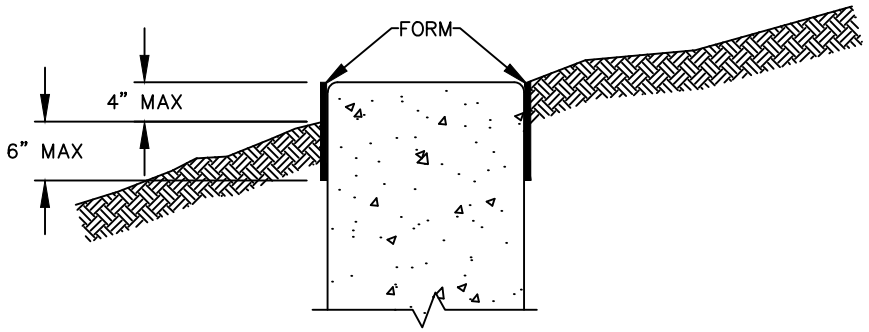

A. FORM DEPTH SHALL BE NO MORE THAN 6" BELOW GRADE ON THE LOWER SIDE OF THE BASE.

B. IF A BASE REQUIRES A DEEP FORM BECAUSE OF LOOSE DIRT OR FILL, THE FORM SHALL BE REMOVED BEFORE BACKFILLING AROUND THE BASE.

C. BACKFILL SHALL BE TAMPED TIGHT AGAINST THE BARE CONCRETE BASE IN LAYERS OF 12" OR LESS.

TOP VIEW

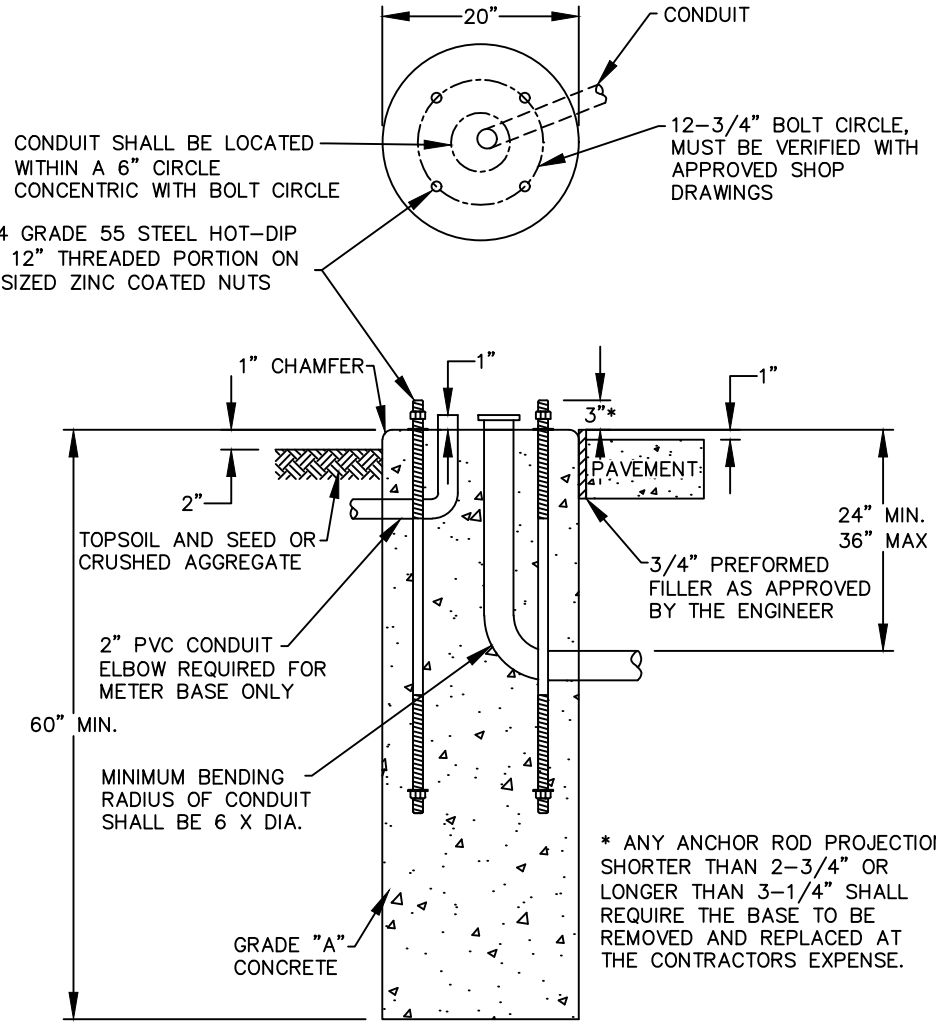

* ANY ANCHOR ROD PROJECTION SHORTER THAN 2-3/4" OR LONGER THAN 3-1/4" SHALL REQUIRE THE BASE TO BE REMOVED AND REPLACED AT THE CONTRACTORS EXPENSE.

SIDE VIEW

CITY OF GREEN BAY
DEPARTMENT OF PUBLIC WORKS
ENGINEERING DIVISION

TYPE 1 BASE

CITY OF GREEN BAY
STANDARD SPECIFICATION
2020 EDITION

NOTES:

1. LOCATION OF BASE SHALL BE A MINIMUM OF 30" FROM BACK OF CURB TO CENTER OF BASE AND 30" FROM END OF RADIUS.
2. GROUNDING WIRE TO BE #6 BARE COPPER. ACORN CONNECTOR TO BE SIZED FOR GROUNDING ROD AND WIRE. WIRE TO BE EXPOSED A MINIMUM OF 36" ABOVE BASE FOR GROUNDING OF POLE.
3. SEE CONDUIT LAYOUT FOR PROPER CONDUIT SIZE.
4. ANCHOR BOLT SQUARE SHALL BE ORIENTED PARALLEL TO ROADWAY.
5. TOP OF BASE TO BE AT CURB GRADE PLUS 1" PLUS 1/4" PER FOOT BEHIND CURB.

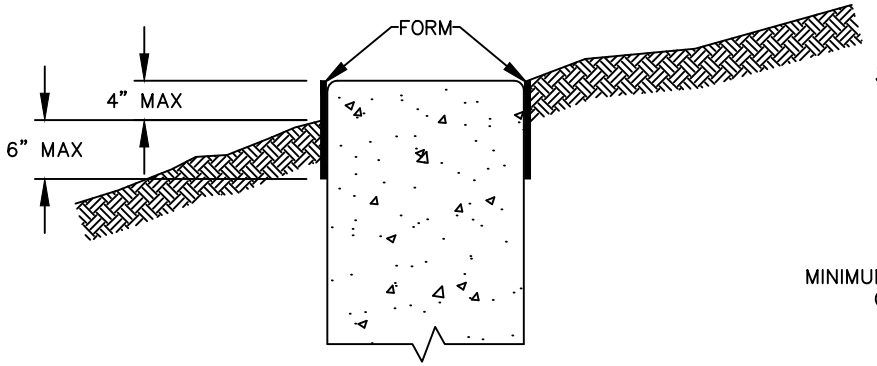

A. FORM DEPTH SHALL BE NO MORE THAN 6" BELOW GRADE ON THE LOWER SIDE OF THE BASE.

B. IF A BASE REQUIRES A DEEP FORM BECAUSE OF LOOSE DIRT OR FILL, THE FORM SHALL BE REMOVED BEFORE BACKFILLING AROUND THE BASE.

C. BACKFILL SHALL BE TAMPED TIGHT AGAINST THE BARE CONCRETE BASE IN LAYERS OF 12" OR LESS.

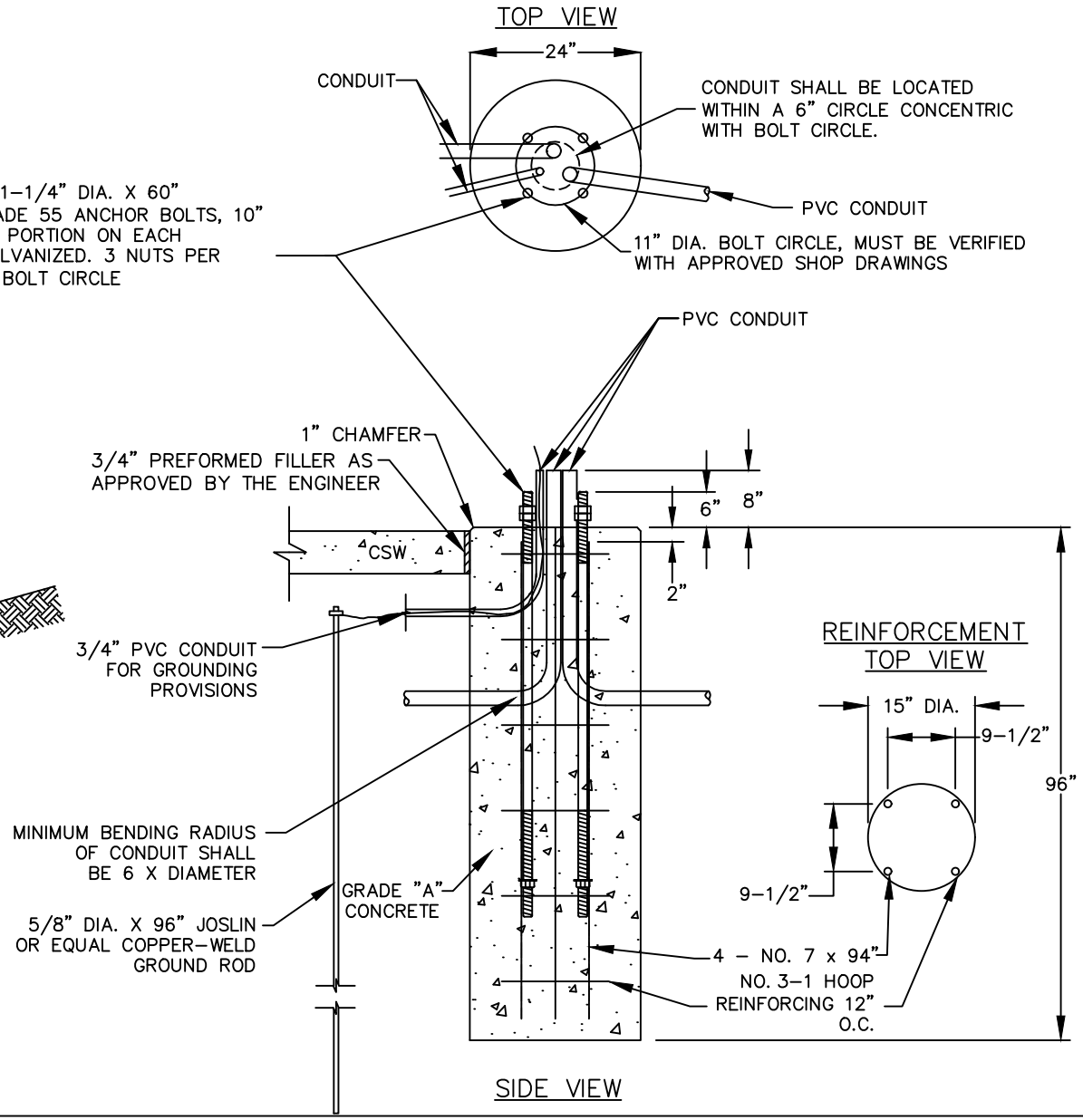

CITY OF GREEN BAY
DEPARTMENT OF PUBLIC WORKS
ENGINEERING DIVISION

TYPE 2 BASE

CITY OF GREEN BAY
STANDARD SPECIFICATION
2020 EDITION

NOTE:

1. LOCATION OF THE BASE SHALL BE A MINIMUM OF 30" FROM BACK OF CURB TO CENTER OF BASE AND 30" FROM END OF RADIUS
2. GROUNDING WIRE TO BE #6 BARE COPPER. ACORN CONNECTOR TO BE SIZED FOR GROUNDING ROAD AND WIRE. WIRE TO BE EXPOSED A MINIMUM OF 36" ABOVE BASE FOR GROUNDING OF POLE.
3. SEE CONDUIT LAYOUT FOR PROPER CONDUIT SIZE.
4. ANCHOR BOLT SQUARE SHALL BE ORIENTED PARALLEL TO ROADWAY.
5. TOP OF BASE TO BE AT CURB GRADE PLUS 1" PLUS 1/4" PER FOOT BEHIND CURB.

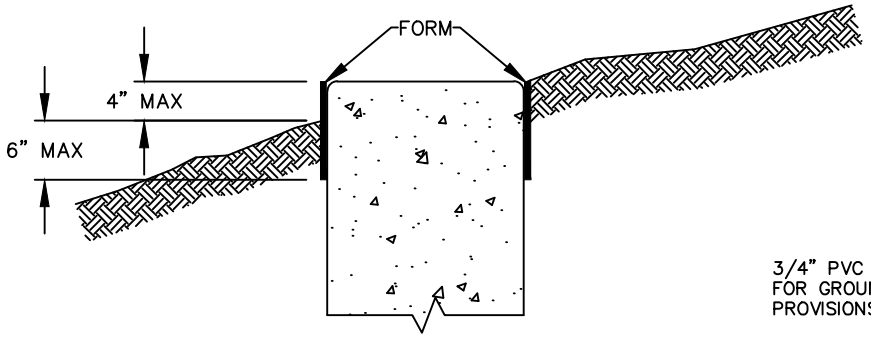

A. FORM DEPTH SHALL BE NO MORE THAN 6" BELOW GRADE ON THE LOWER SIDE OF THE BASE.

B. IF A BASE REQUIRES A DEEP FORM BECAUSE OF LOOSE DIRT OR FILL, THE FORM SHALL BE REMOVED BEFORE BACKFILLING AROUND THE BASE.

C. BACKFILL SHALL BE TAMPED TIGHT AGAINST THE BARE CONCRETE BASE IN LAYERS OF 12" OR LESS.

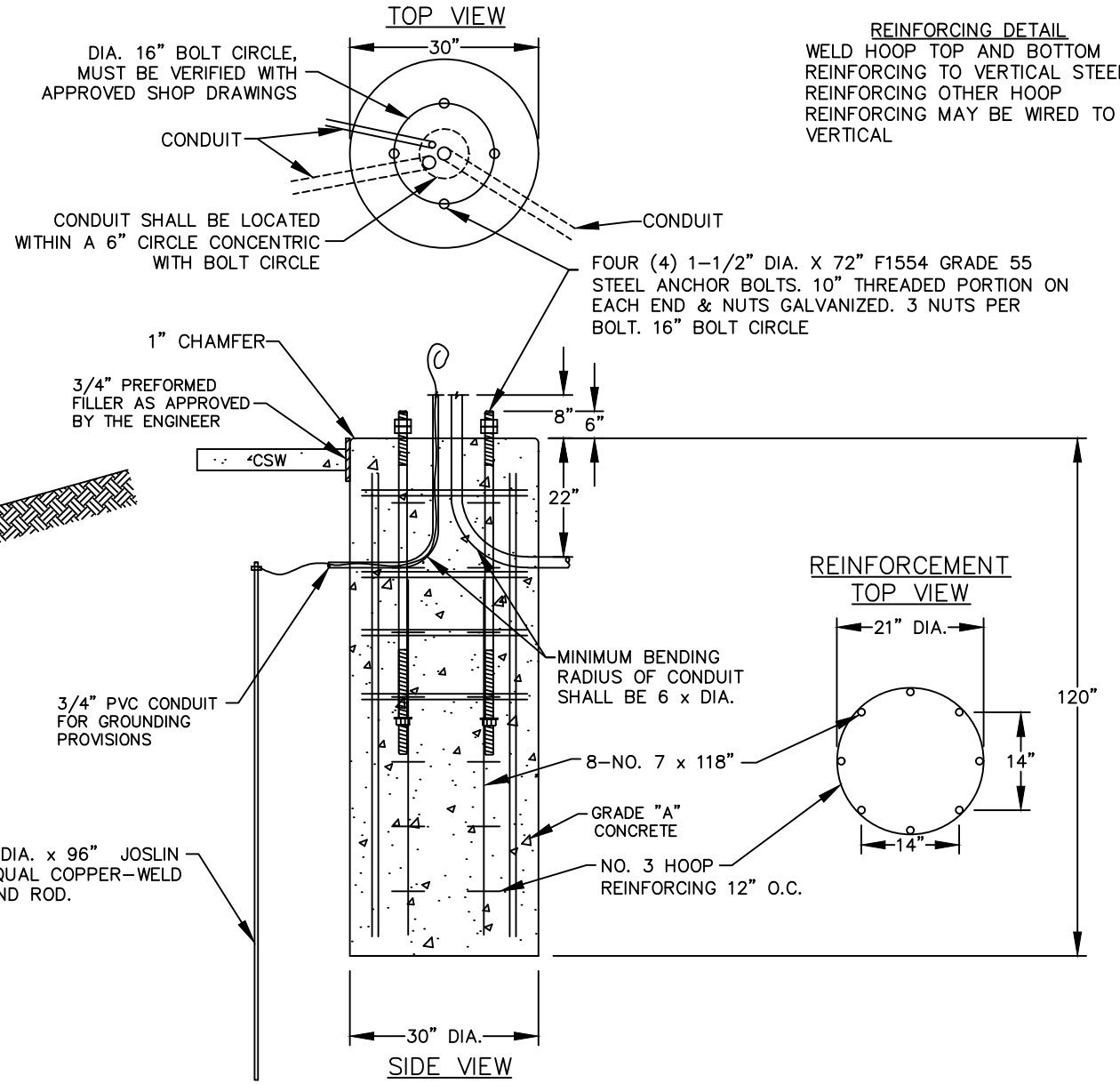

REINFORCING DETAIL

WELD HOOP TOP AND BOTTOM REINFORCING TO VERTICAL STEEL REINFORCING OTHER HOOP REINFORCING MAY BE WIRED TO VERTICAL

CITY OF GREEN BAY
DEPARTMENT OF PUBLIC WORKS
ENGINEERING DIVISION

TYPE 3 BASE

CITY OF GREEN BAY
STANDARD SPECIFICATION
2020 EDITION

NOTE :
LOCATION OF BASE SHALL BE A MINIMUM OF 30" FROM BACK OF CURB TO CENTER OF BASE AND 30" FROM END OF RADIUS.

GROUNDING WIRE TO BE #6 BARE COPPER. ACORN CONNECTOR TO BE SIZED FOR GROUNDING ROD AND WIRE. WIRE TO BE EXPOSED A MINIMUM OF 3' ABOVE BASE FOR GROUNDING OF POLE.

SEE CONDUIT LAYOUT FOR PROPER CONDUIT SIZE.

ANCHOR BOLT SQUARE SHALL BE ORIENTED PARALLEL TO ROADWAY.

TOP OF BASE TO BE AT CURB GRADE PLUS 1" PLUS 1/4"/FT. BEHIND CURB.

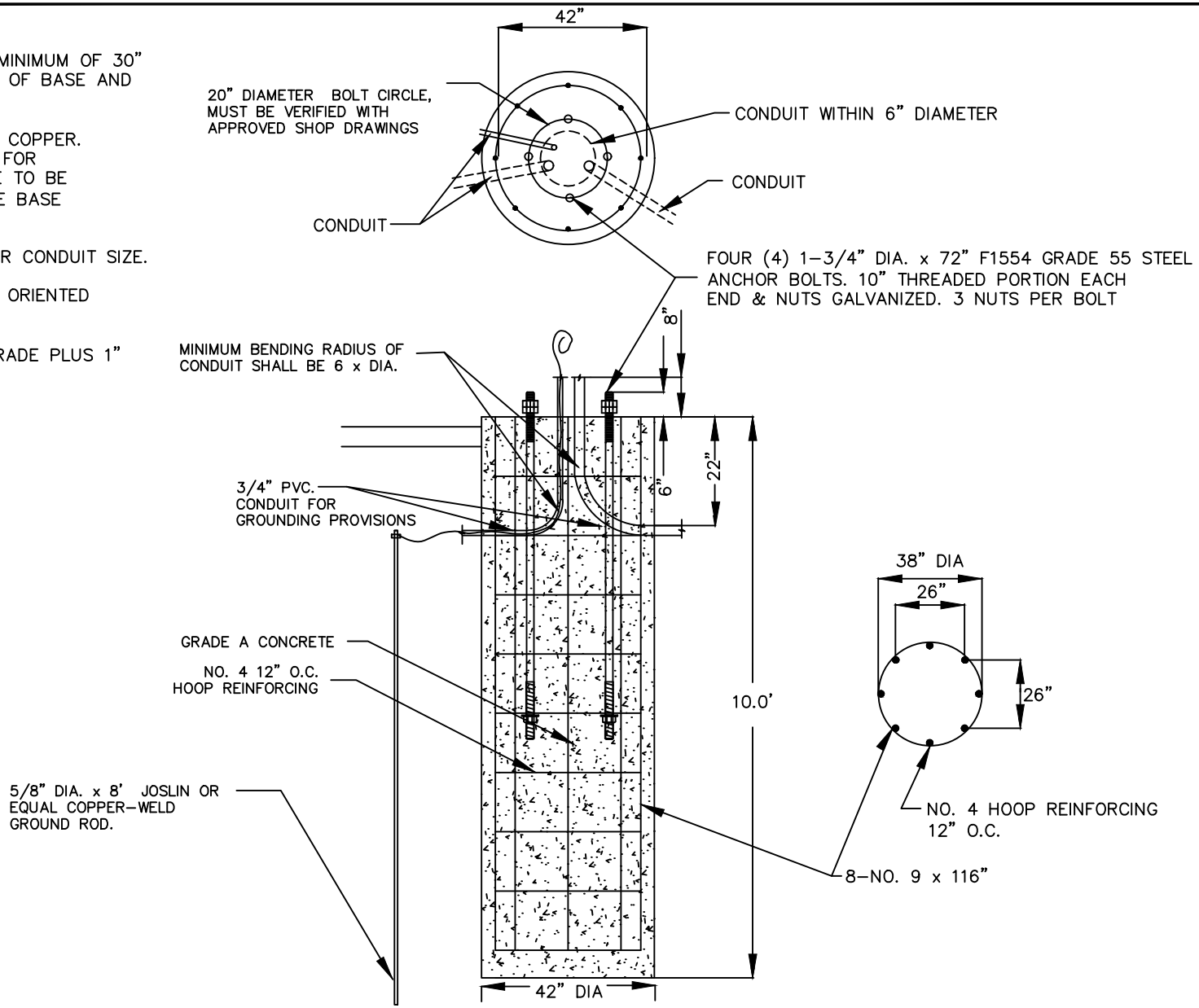

CITY OF GREEN BAY
DEPARTMENT OF PUBLIC WORKS
ENGINEERING DIVISION

TYPE 4 BASE

CITY OF GREEN BAY
STANDARD SPECIFICATION
2020 EDITION

NOTE :
LOCATION OF BASE SHALL BE A MINIMUM OF 30" FROM BACK OF CURB TO CENTER OF BASE AND 30" FROM END OF RADIUS.

GROUNDING WIRE TO BE #6 BARE COPPER. ACORN CONNECTOR TO BE SIZED FOR GROUNDING ROD AND WIRE. WIRE TO BE EXPOSED A MINIMUM OF 3' ABOVE BASE FOR GROUNDING OF POLE.

SEE CONDUIT LAYOUT FOR PROPER CONDUIT SIZE.

ANCHOR BOLT SQUARE SHALL BE ORIENTED PARALLEL TO ROADWAY.

TOP OF BASE TO BE AT CURB GRADE PLUS 1" PLUS 1/4"/FT. BEHIND CURB.

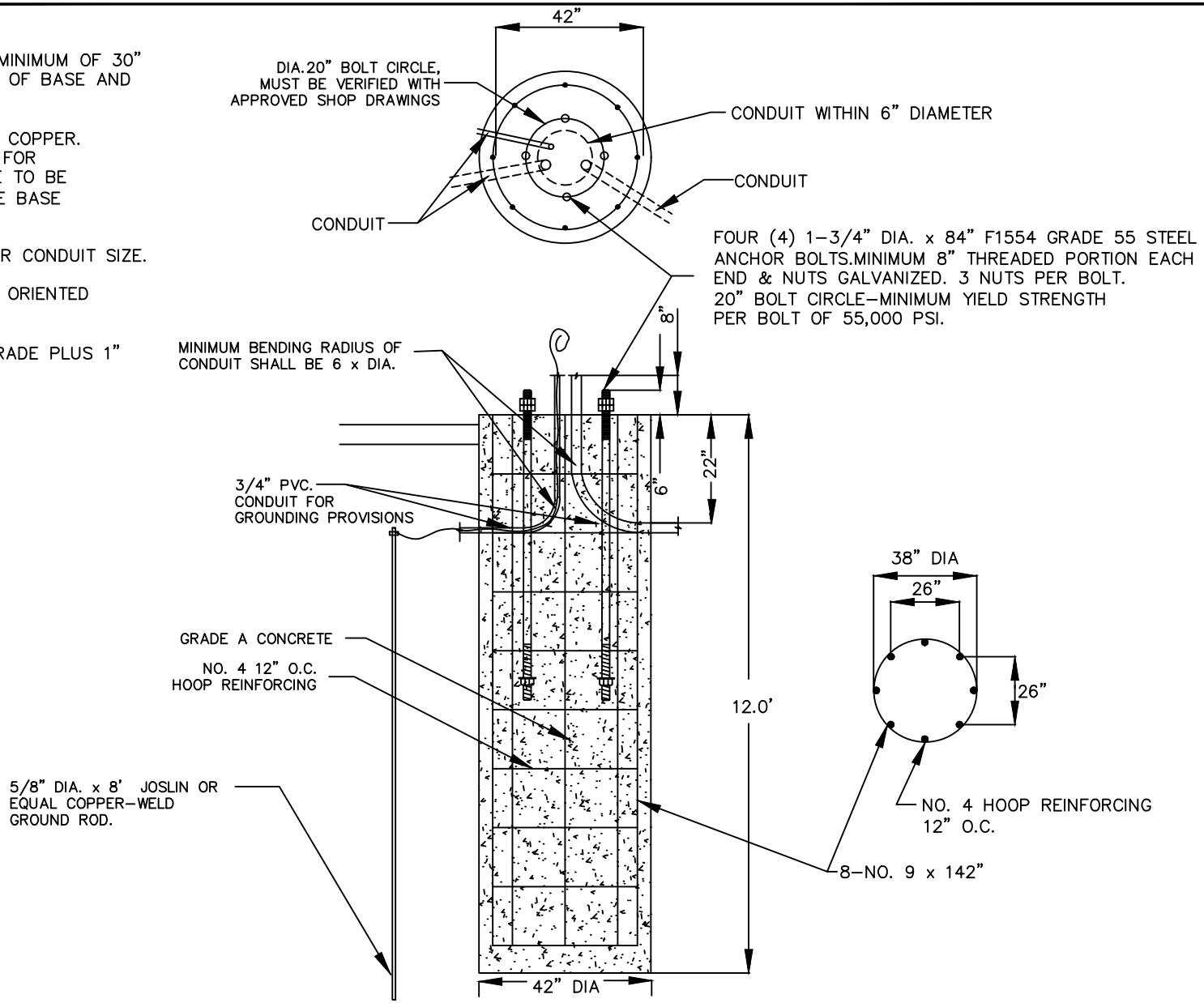

CITY OF GREEN BAY
DEPARTMENT OF PUBLIC WORKS
ENGINEERING DIVISION

TYPE 5 BASE

CITY OF GREEN BAY
STANDARD SPECIFICATION
2020 EDITION

NOTES:

1. BASES LOCATED BETWEEN THE QUEUE LINE CONCRETE SLAB AND WATERFALL SHALL BE 15" FROM THE EDGE OF PAVEMENT TO THE CENTER OF BASE. ALL OTHER BASE LOCATIONS SHALL BE A MINIMUM OF 27" FROM EDGE OF PAVEMENT TO THE CENTER OF THE BASE.
2. GROUNDING WIRE TO BE #6 BARE COPPER. ACORN CONNECTOR TO BE SIZED FOR GROUNDING ROD AND WIRE. WIRE TO BE EXPOSED A MINIMUM OF 36" ABOVE BASE FOR GROUNDING POLE.
3. SEE CONDUIT LAYOUT FOR PROPER CONDUIT SIZE.
4. ANCHOR BOLT SQUARE SHALL BE ORIENTED PARALLEL TO ROADWAY, TRAIL, OR SLAB.
5. TOP OF BASE TO BE AT THE EDGE OF PAVEMENT GRADE PLUS 1".
6. WELD HOOP TOP AND BOTTOM REINFORCING TO VERTICAL STEEL REINFORCING. OTHER HOOP REINFORCING MAY BE WIRED TO VERTICAL REINFORCING.
7. LIGHT POLES SHALL BE PROVIDED AND PLACED BY OTHERS AND SHALL BE U.S. ARCHITECTURAL LIGHTING, RNTA SERIES.

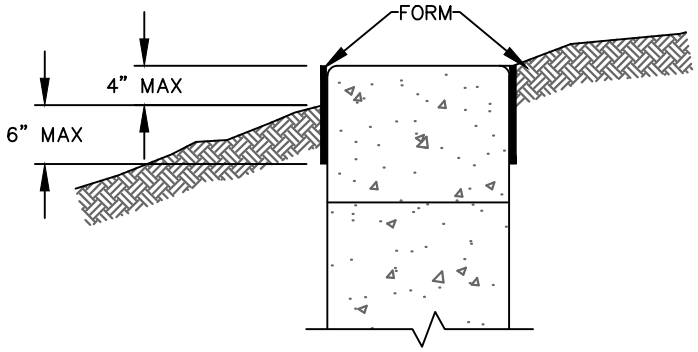

A. FORM DEPTH SHALL BE NO MORE THAN 6" BELOW GRADE ON THE LOWER SIDE OF THE BASE.

B. IF A BASE REQUIRES A DEEP FORM BECAUSE OF LOOSE DIRT OR FILL, THE FORM SHALL BE REMOVED BEFORE BACKFILLING AROUND THE BASE.

C. BACKFILL SHALL BE TAMPED TIGHT AGAINST THE BARE CONCRETE BASE IN LAYERS OF 12" OR LESS.

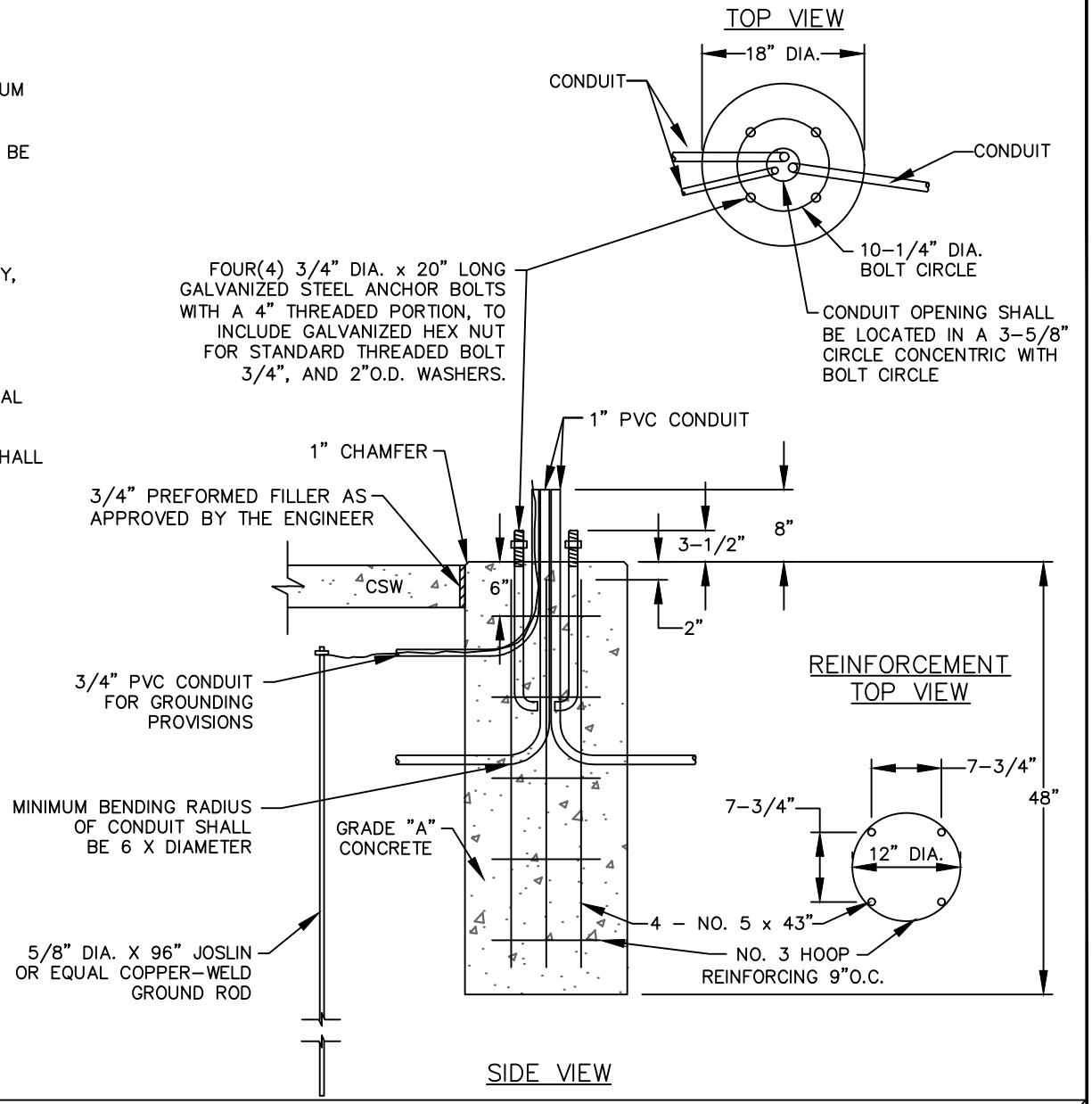

CITY OF GREEN BAY DEPARTMENT OF PUBLIC WORKS ENGINEERING DIVISION	DECO BASE	CITY OF GREEN BAY STANDARD SPECIFICATION 2020 EDITION

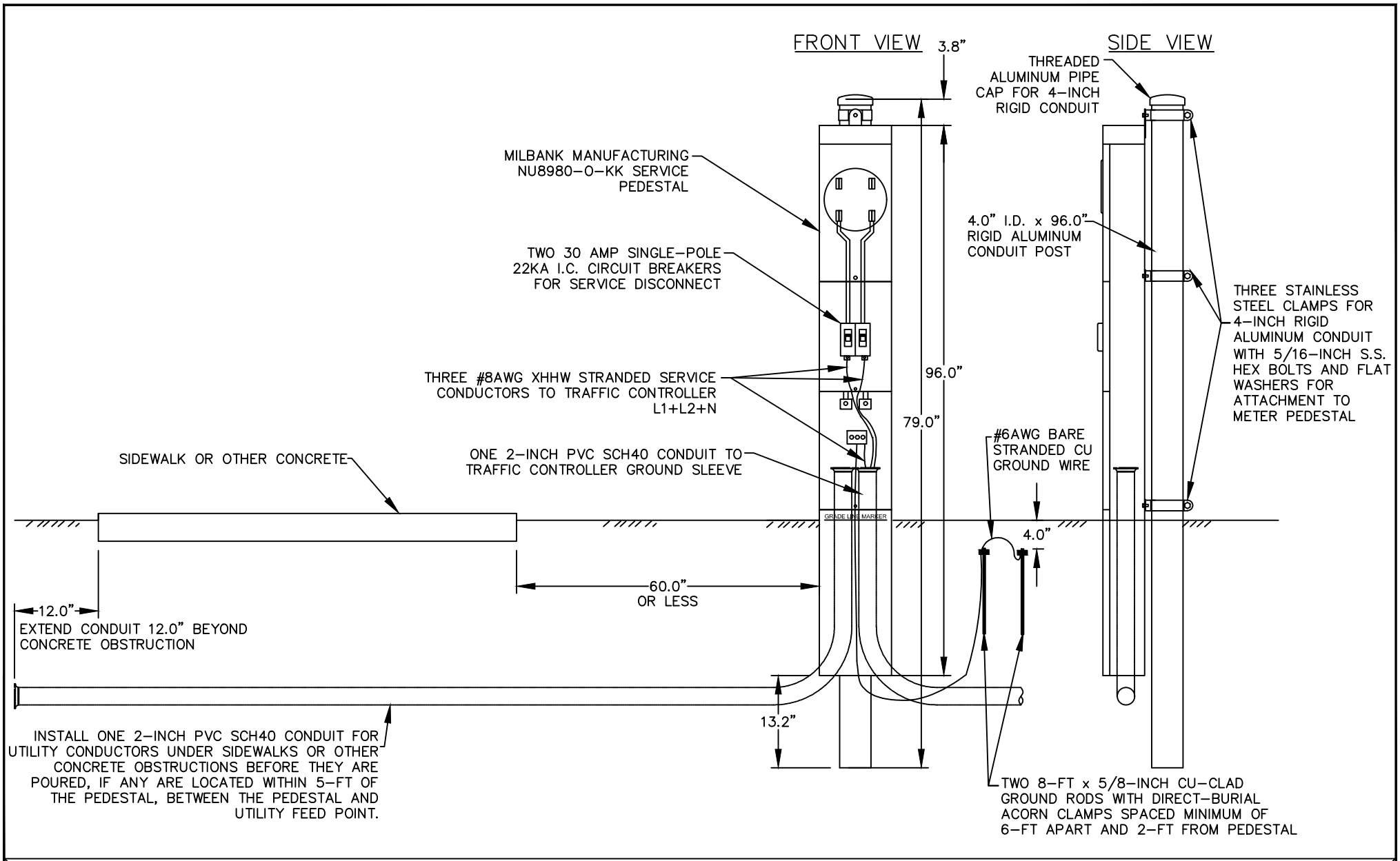

CITY OF GREEN BAY
DEPARTMENT OF PUBLIC WORKS
ENGINEERING DIVISION

ELECTRICAL SERVICE METER BREAKER PEDESTAL

CITY OF GREEN BAY
STANDARD SPECIFICATION
2020 EDITION

Division 8 Detail Drawings

Scourstop

Perimeter Fencing and Queue Line Post

Pipe Railing

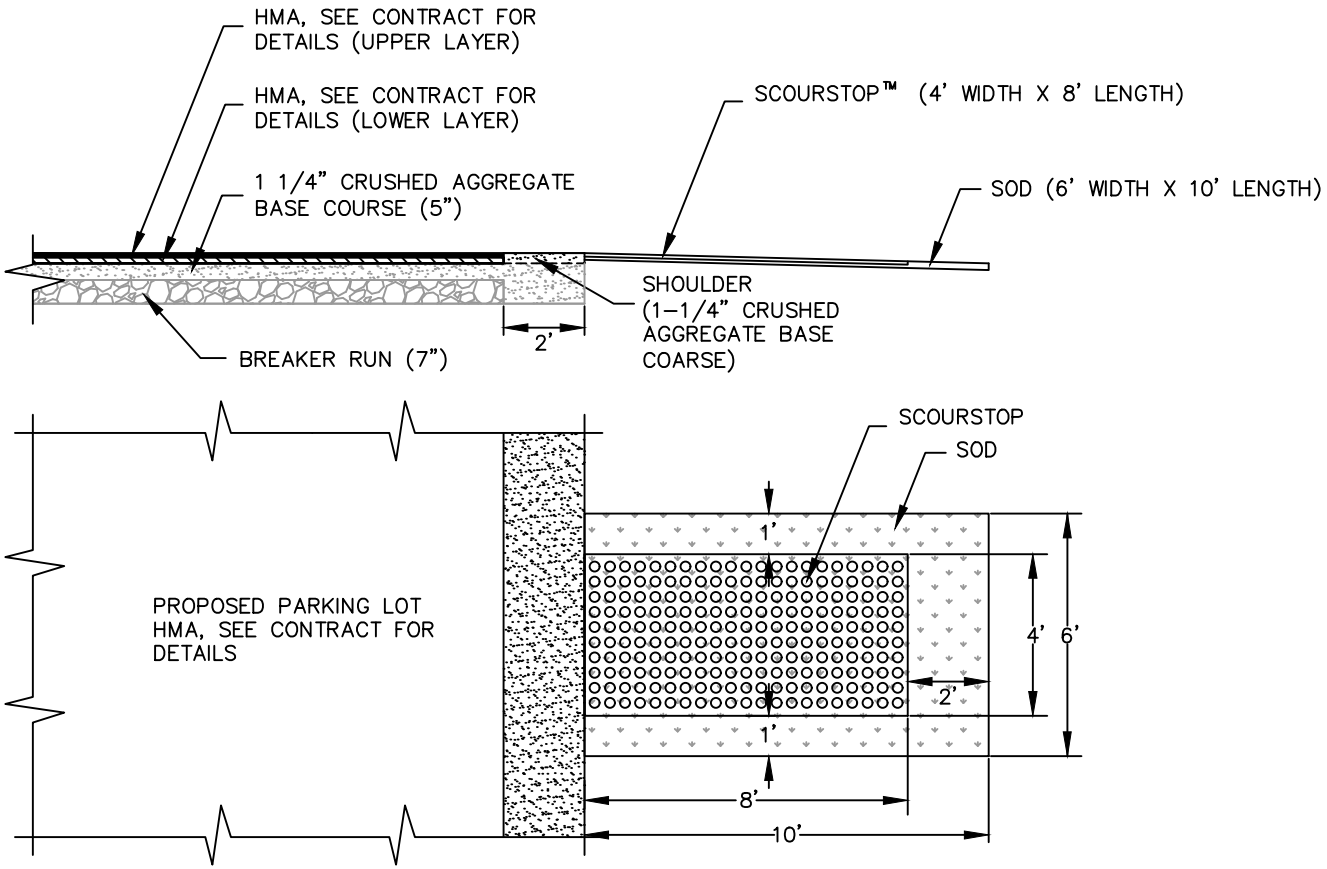

CITY OF GREEN BAY
DEPARTMENT OF PUBLIC WORKS
ENGINEERING DIVISION

SCOURSTOP

CITY OF GREEN BAY
STANDARD SPECIFICATION
2020 EDITION

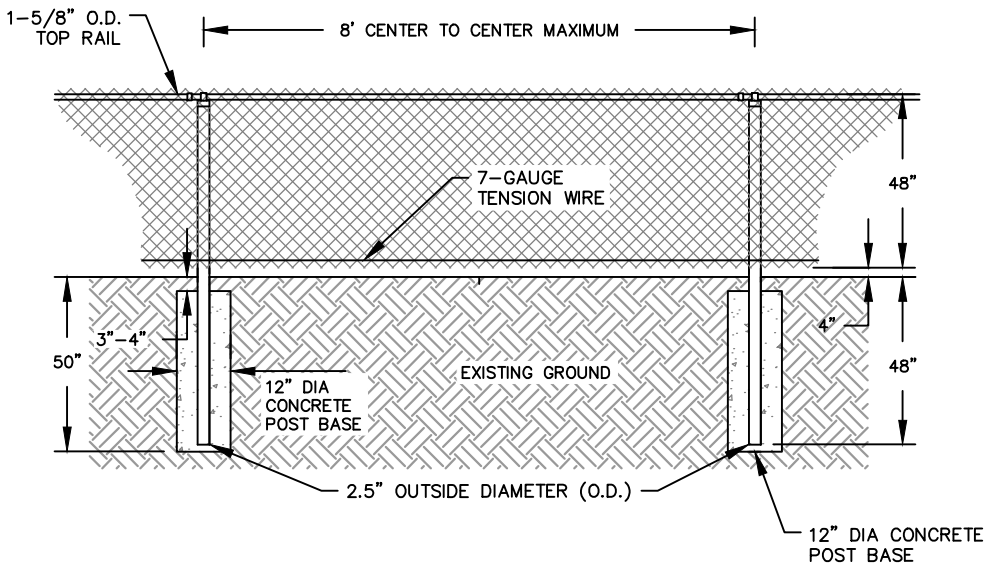

FENCING DETAIL

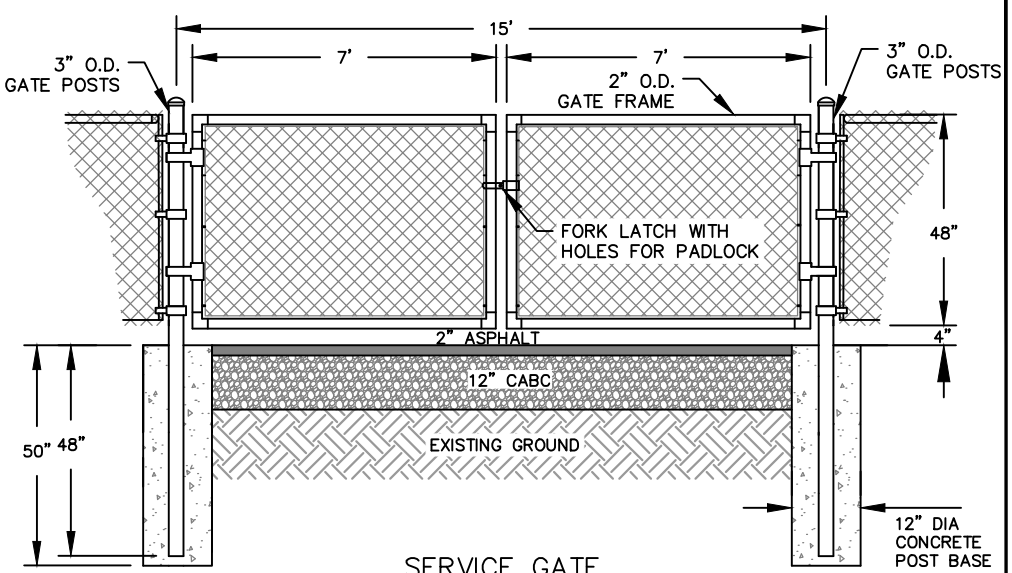

SERVICE GATE

NOTE: A SPRING SHALL NOT BE USED WITH GATES

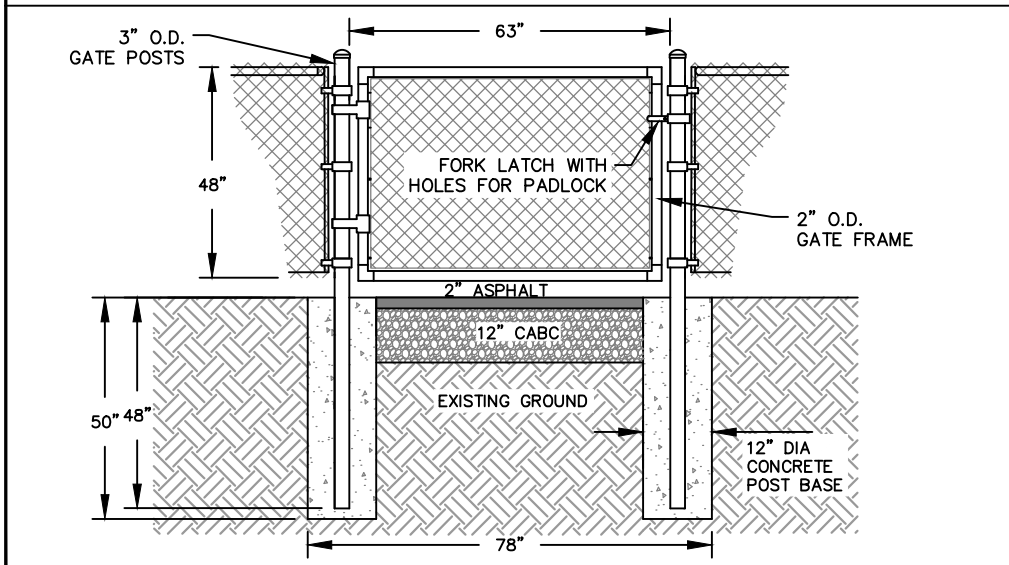

ENTRANCE & EXIT GATES

NOTE: A SPRING SHALL NOT BE USED WITH GATES

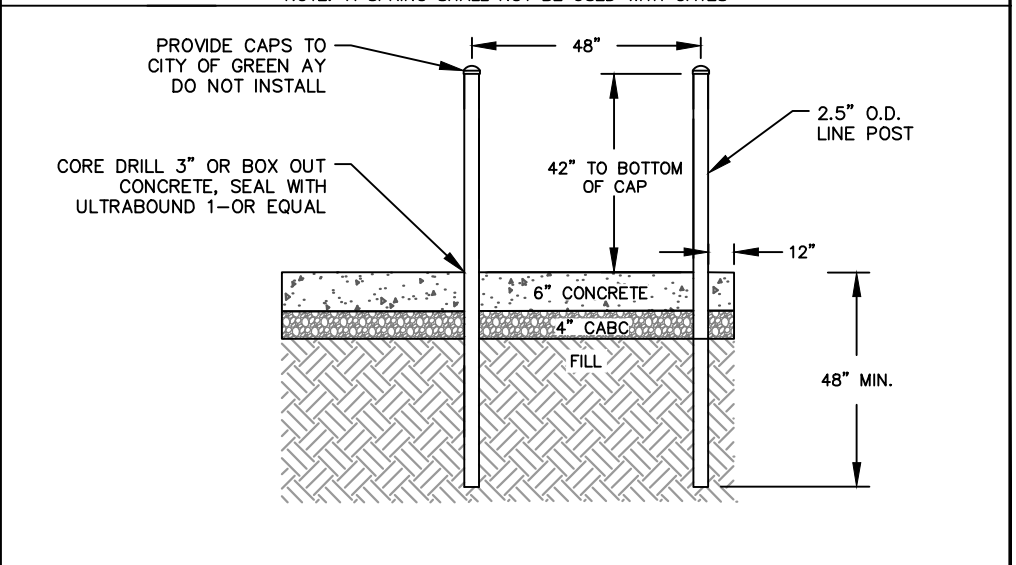

QUEUE LINE

NOTE: QUE LINE POSTS TO BE SPACED 8'-9' APART

CITY OF GREEN BAY
DEPARTMENT OF PUBLIC WORKS
ENGINEERING DIVISION

PERIMETER FENCING &
QUEUE LINE POST

CITY OF GREEN BAY
STANDARD SPECIFICATION
2020 EDITION

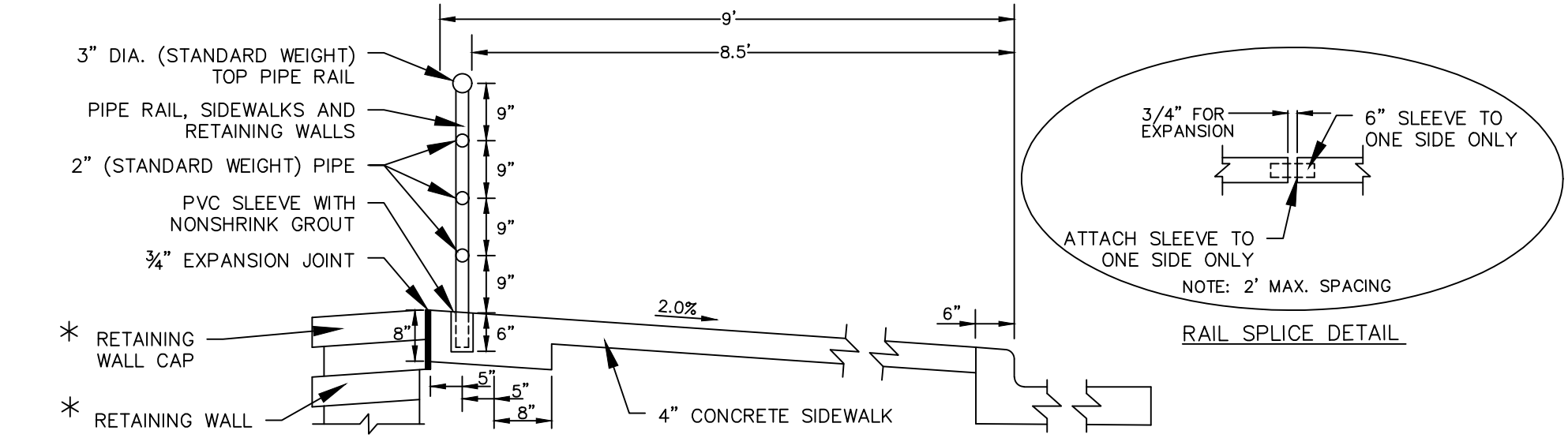

SECTION E–E

* OR EARTH SLOPE WHERE RETAINING WALL NOT REQUIRED

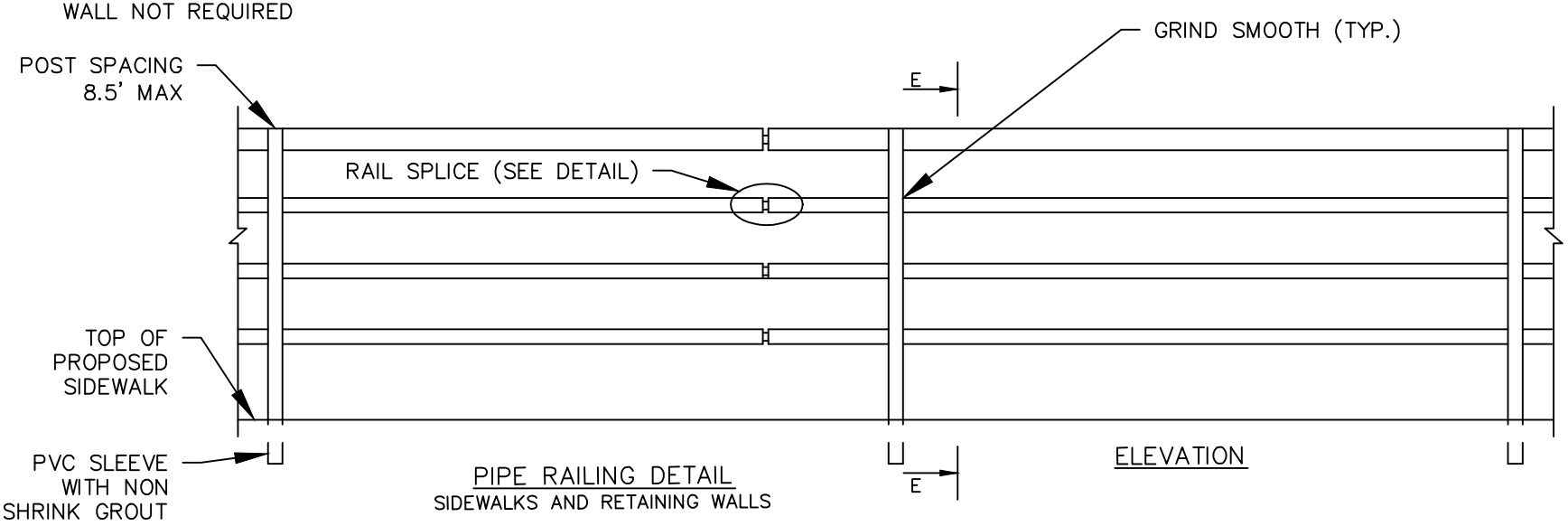

PIPE RAILING DETAIL
SIDEWALKS AND RETAINING WALLS

ELEVATION

CITY OF GREEN BAY DEPARTMENT OF PUBLIC WORKS ENGINEERING DIVISION	PIPE RAILING	CITY OF GREEN BAY STANDARD SPECIFICATION 2020 EDITION