NEW RESIDENCE PERMIT
PLAN APPROVAL FEES

The fees for the following will be paid at the time the permit is dropped off for review.

Site Plan Review Fee	$50
Building Plan Review Fee	50
Erosion Control Plan Review Fee	25
Floodplain or Wetland property *(if applicable)*	25

The fees for the following will be paid at the time the permit is picked up.

- Building Permit
- Electrical Permit
- Heating Permit
- Plumbing Permit
- Sanitary Sewer & Water Permit
- Storm Sewer Permit
- UDC Seal
- Certificate of Occupancy
- Erosion Control Permit
- Curb Cut Permit

Wisconsin Division of Safety and Buildings Wisconsin Stats. 101.63, 101.73	**WISCONSIN UNIFORM BUILDING PERMIT APPLICATION** **Instructions on back of second ply.** The information you provide may be used by other government agency programs [(Privacy Law, s. 15.04 (1)(m)]	Application No. Parcel No.

PERMIT REQUESTED ☐ Constr. ☐ HVAC ☐ Electric ☐ Plumbing ☐ Erosion Control ☐ Other:

Owner's Name	Mailing Address		Tel.
Contractor Name & Type	Lic/Cert#	Mailing Address	Tel. & Fax
Dwelling Contractor (Constr.)			
Dwelling Contr. Qualifier		The Dwelling Contr. Qualifier shall be an owner, CEO, COB or employee of the Dwelling Contr.	
HVAC			
Electrical			
Plumbing			

PROJECT LOCATION	Lot area Sq.ft.	☐ One acre or more of soil will be disturbed	☐ Town ☐ Village ☐ City of	_____ 1/4, _____ 1/4, of Section _____, T_____N, R ____E/W

Building Address	County	Subdivision Name	Lot No.	Block No.

Zoning District(s)	Zoning Permit No.	**Setbacks:**	Front ft.	Rear ft.	Left ft.	Right ft.

1. PROJECT
☐ New ☐ Repair
☐ Alteration ☐ Raze
☐ Addition ☐ Move
☐ Other:

2. AREA INVOLVED (sq ft)

	Unit 1	Unit 2	Total
Unfin. Bsmt			
Living Area			
Garage			
Deck			
Totals			

3. OCCUPANCY
☐ Single Family
☐ Two Family
☐ Garage
☐ Other:

4. CONST. TYPE
☐ Site-Built
☐ Mfd. per WI UDC
☐ Mfd. per US HUD

5. STORIES
☐ 1-Story
☐ 2-Story
☐ Other:
☐ Plus Basement

6. ELECTRIC
Entrance Panel Amps: _____
☐ Underground
☐ Overhead

7. WALLS
☐ Wood Frame
☐ Steel
☐ ICF
☐ Timber/Pole
☐ Other:

8. USE
☐ Seasonal
☐ Permanent
☐ Other:

9. HVAC EQUIP.
☐ Furnace
☐ Radiant Basebd
☐ Heat Pump
☐ Boiler
☐ Central AC
☐ Fireplace
☐ Other:

10. SEWER
☐ Municipal
☐ Sanitary Permit#
_____

11. WATER
☐ Municipal
☐ On-Site Well

12. ENERGY SOURCE

Fuel	Nat Gas	LP	Oil	Elec	Solid	Solar
Space Htg	☐	☐	☐	☐	☐	☐
Water Htg	☐	☐	☐	☐	☐	☐

13. HEAT LOSS
_____ BTU/HR Total Calculated Envelope and Infiltration Losses (available from "Total Building Heating Load" on Rescheck report)

14. EST. BUILDING COST w/o LAND
$

I understand that I: am subject to all applicable codes, laws, statutes and ordinances, including those described on the reverse side of the last ply of this form; am subject to any conditions of this permit; understand that the issuance of this permit creates no legal liability, express or implied, on the state or municipality; and certify that all the above information is accurate. If one acre or more of soil will be disturbed, I understand that this project is subject to ch. NR 151 regarding additional erosion control and stormwater management and the owner shall sign the statement on the back of the permit if not signing below. I expressly grant the building inspector, or the inspector's authorized agent, permission to enter the premises for which this permit is sought at all reasonable hours and for any proper purpose to inspect the work which is being done.

☐ **I vouch that I am or will be an owner-occupant of this dwelling for which I am applying for an erosion control or construction permit without a Dwelling Contractor Certification and have read the cautionary statement regarding contractor responsibility on the reverse side of the last ply of this form.**

APPLICANT (Print:) _____ **Sign:** _____ **DATE** _____

APPROVAL CONDITIONS This permit is issued pursuant to the following conditions. Failure to comply may result in suspension or revocation of this permit or other penalty. ☐ **See attached for conditions of approval.**

ISSUING JURISDICTION	☐ Town of ☐ Village of ☐ City of ☐ County of ☐ State→	State-Contracted Inspection Agency#:	Municipality Number of Dwelling Location ___ ___ - ___ ___ ___

FEES:		**PERMIT(S) ISSUED**	**WIS PERMIT SEAL #**	**PERMIT ISSUED BY:**
Plan Review	$_____	☐ Construction		Name _____
Inspection	$_____	☐ HVAC		
Wis. Permit Seal	$_____	☐ Electrical		Date _____ Tel. _____
Other	$_____	☐ Plumbing		
		☐ Erosion Control		
Total	$_____	_____		Cert No. _____

SBD-5823(R.8/10) Distribute: ☐ Ply 1 – Issuing Jurisdiction; ☐ Ply 2- Issuer forwards to State w/in 30 days; ☐ Ply 3- Inspector; ☐ Ply 4- Applicant

INSTRUCTIONS

The owner, builder or agents shall complete the application form down through the Signature of Applicant block and submit it and building plans and specifications to the enforcing jurisdiction, which is usually your municipality or county. Permit application data is used for statewide statistical gathering on new one- and two-family dwellings, as well as for local code administration. **Please type or use ink and press firmly with multi-ply form.**

PERMIT REQUESTED

- Check off type of Permit Requested, such as structural, HVAC, Electrical or Plumbing.
- Fill in owner's current Mailing Address and Telephone Number.
- If the project will disturb one acre or more of soil, the project is subject to the additional erosion control and stormwater provisions of ch. NR 151 of the WI Administrative Code. Checking this box will satisfy the related notification requirements of ch. NR 216.
- Fill in Contractor and Contractor Qualifier Information. Per s. 101.654 (1) WI Stats., an individual taking out an erosion control or construction permit shall enter his or her dwelling contractor certificate number, and name and certificate number of the dwelling contractor qualifier employed by the contactor, unless they reside or will reside in the dwelling. Per s. 101.63 (7) Wis. Stats., the master plumber name and license number must be entered before issuing a plumbing permit.

PROJECT LOCATION

- Fill in Building Address (number and street or sufficient information so that the building inspector can locate the site.
- Local zoning, land use and flood plain requirements must be satisfied before a building permit can be issued. County approval may be necessary.
- Fill in Zoning District, lot area and required building setbacks.

PROJECT DATA - Fill in all numbered project data blocks (1-14) with the required information. All data blocks must be filled in, including the following:

2. Area (involved in project):
   Basements - include unfinished area only
   Living area - include any finished area including finished areas in basements
   Two-family dwellings - include separate and total combined areas
3. Occupancy - Check only "Single-Family" or "Two-Family" if that is what is being worked on. In other words, do not check either of these two blocks if only a new detached garage is being built, even if it serves a one or two family dwelling. Instead, check "Garage" and number of stalls. If the project is a community based residential facility serving 3 to 8 residents, it is considered a single-family dwelling.
9. HVAC Equipment - Check only the major source of heat, plus central air conditioning if present. Only check "Radiant Baseboard" if there is no central source of heat.
10. Plumbing - A building permit cannot be issued until a sanitary permit has been issued for any new or affected existing private onsite wastewater treatment system.
14. Estimated Cost - Include the total cost of construction, including materials and market rate labor, but not the cost of land or landscaping.

SIGNATURE - Sign and date this application form. If you do not possess the Dwelling Contractor certification, then you will need to check the owner-occupancy statement for any erosion control or construction permits.

CONDITIONS OF APPROVAL - The authority having jurisdiction uses this section to state any conditions that must be complied with pursuant to issuing the building permit.

ISSUING JURISDICTION: This must be completed by the authority having jurisdiction.

- Check off Jurisdiction Status, such as town, village, city, county or state and fill in Municipality Name
- Fill in State Inspection Agency number only if working under state inspection jurisdiction.
- Fill in Municipality Number of Dwelling Location
- Check off type of Permit Issued, such as construction, HVAC, electrical or plumbing.
- Fill in Wisconsin Uniform Permit Seal Number, if project is a new one- or two-family dwelling.
- Fill in Name and Inspector Certification Number of person reviewing building plans and date building permit issued.

INSPECTORS: PLEASE RETURN SECOND PLY WITHIN 30 DAYS AFTER ISSUANCE TO (You may fold along the dashed lines and insert this form into a window envelope.):

Safety & Buildings Division
P O Box 2509
Madison, WI 53701-2509

(Part of Ply 4 for Applicants)

Cautionary Statement to Owners Obtaining Building Permits

101.65(lr) of the Wisconsin Statutes requires municipalities that enforce the Uniform Dwelling Code to provide an owner who applies for a building permit with a statement advising the owner that:

If the owner hires a contractor to perform work under the building permit and the contractor is not bonded or insured as required under s. 101.654 (2) (a), the following consequences might occur:

(a) The owner may be held liable for any bodily inquiry to or death of others or for any damage to the property of others that arises out of the work performed under the building permit or that is caused by any negligence by the contractor that occurs in connection with the work performed under the building permit.

(b) The owner may not be able to collect from the contractor damages for any loss sustained by the owner because of a violation by the contractor of the one- and two- family dwelling code or an ordinance enacted under sub. (1) (a), because of any bodily injury to or death of others or damage to the property of others that arises out of the work performed under the building permit or because of any bodily injury to or death of others or damage to the property of others that is caused by any negligence by the contractor that occurs in connection with the work performed under the building permit.

Cautionary Statement to Contractors for Projects Involving Building Built Before 1978

If this project is in a dwelling or child-occupied facility, built before 1978, and disturbs 6 sq. ft. or more of paint per room, 20 sq. ft. or more of exterior paint, or involves windows, then the requirements of ch. DHS 163 requiring Lead-Safe Renovation Training and Certification apply. Call (608)261-6876 or go to http://dhs.wisconsin.gov/lead/WisconsinRRPRule.htm for details of how to be in compliance

Wetlands Notice to Permit Applicants

You are responsible for complying with state and federal laws concerning the construction near or on wetlands, lakes, and streams. Wetlands that are not associated with open water can be difficult to identify. Failure to comply may result in removal or modification of construction that violates the law or other penalties or costs. For more information, visit the Department of Natural Resources wetlands identification web page or contact a Department of Natural Resources service center.

Additional Responsibilities for Owners of Projects Disturbing One or More Acre of Soil

I understand that this project is subject to ch. NR 151 regarding additional erosion control and stormwater management and will comply with those standards.

Owner's Signature: _____ Date:_____

Community Services Agency
Inspection Division
100 N. Jefferson St., Rm. 610
Green Bay, WI 54301-5026
TEL: (920) 448-3300
FAX: (920) 448-3117

To: Wisconsin Uniform Building Permit Recipient

Application for a Wisconsin Uniform Building Permit shall be on forms obtained from the City of Green Bay Inspection Division. The Inspection Division has the responsibility of administering and enforcing the code. No application shall be accepted that does not contain all the information requested on the forms. Permits will be issued from 3-10 days after submission of complete application and plans.

Procedure for Obtaining Building Permit

Step 1 – Obtain Street Address from Inspection Division, Room 610
Prior to submitting the application forms and plans, the street address shall be assigned. Provide the Inspection Division with the street name and legal description of the property, which includes the Subdivision Name, Lot Number, and Parcel Number or Certified Survey Map Number, Lot Number, and Parcel Number. You may obtain the street address in person or by faxing the above request to (920) 448-3117. A specific address request will be honored if it falls in an acceptable range.

Step 2 – Submission of Application and Plans
The following forms and plans shall be submitted to the Inspection Division with the assigned street address identification on all submissions.

- Wisconsin Uniform Building Permit Application
- 2 copies of site plan
- 2 copies of erosion control plan
- 2 copies of building plans, including wall brace plan and calculations
- Application for Plumbing Permit signed by Master Plumber
- Application for Heating Permit **and** Heat Loss Calculations, both signed by Licensed Heating Contractor
- Application for Electrical Permit signed by Master Electrician
- Fees associated with the review of the project (site plan, building plan, and erosion control plan)

Step 3 – Review of Submittal and Determination of Fees
The Building Inspector shall review the submittal and notify the applicant immediately if any required information is missing or incomplete. If the required information is not received within 30 days, the permit will be denied and the plans returned and stamped "Not Approved". See the current Fee Schedule to determine the fees.

Step 4 – Issuance of Building Permits
The Building Inspector shall notify the applicant that the plans have been approved and the amount of the fees required. The following fees must be paid before the project can begin: Building, Electric, Plumbing, Heating, Storm, Sanitary, Water, Erosion Control, UDC Seal, Certificate of Occupancy, and Curb Cut/Culvert. After all the fees are paid, the following permit information will be released and work may begin. Permit Fee Receipts: Letter to Wisconsin UDC Permit Recipient; Owner/Agent Copy of UDC Permit Application; Sewer and Water Installation Permit; Curb Cut/Culvert Permit; Erosion Control; UDC Permit Card with seal, Copy of Conditionally Approved Site Plan, Erosion Control Plan, and Building Plans.

Community Services Agency
Inspection Division
100 N. Jefferson St., Rm. 610
Green Bay, WI 54301-5026
TEL: (920) 448-3300
FAX: (920) 448-3117

To: Wisconsin Uniform Building Permit Recipient

Your building plans have been reviewed for conformance with applicable Wisconsin Administrative Codes and City of Green Bay Ordinances. The plans have been "Conditionally Approved" and the Uniform Building permit issued. This plan action is subject to the approval conditions listed on the permit application. The owner, as defined in Chapter 101.01(2)(e), Wisconsin Statutes, is responsible for compliance with all code requirements.

Lot Corners Monumented

Section 15.24 of the Green Bay Ordinances requires that all lot corners of the property upon which any building is to be located shall be or have been monumented by a registered land surveyor. The monuments shall be marked by wood guard stakes and maintained and kept readily visible until the footings have been inspected and approved by the Building Inspector.

Posting of Permit

The Wisconsin Uniform Building Permit shall be posted in a conspicuous place at the dwelling site.

Required Inspections

Call (920) 448-3300 to schedule the required inspections listed below. Do not leave inspection requests on voicemail. Our office hours are 8 a.m. to 4:30 p.m. A 24-hour notice is required, and the street address and type of inspection must be given when requesting an inspection.

1. **Footing** – After placement of forms, shoring, and reinforcement where required and prior to the placement of footing materials. Lot corners must be monumented to approve inspection.
2. **Foundation Wall** – After forms are set and any required shoring or reinforcement is in place.
3. **Drain Tile, Stone, & Tar** – Prior to backfilling.
4. **Rough Inspection** – When general construction framing is completed and electrical, plumbing, HVAC, and basement drain tiles have been roughed in.
5. **Insulation** – When in place.
6. **Final Inspection** – When all phases of the building are substantially completed and the building is ready for occupancy.

Construction shall not proceed beyond the point of inspection until the inspection has been completed and approved by the Inspector!

Certificate of Occupancy

No building or part thereof shall be occupied until a final inspection is made which finds that no code violations exist that could reasonably be expected to affect the health and safety of the occupant and a certificate of occupancy has been issued by Building Inspection Superintendent.

Commercial and Production Uses					
Bed and breakfast	C	C	P	C	x
Personal service (≤2,500 sq. ft in floor area)	C	C	C	-	x
General retail sales (≤2,500 sq. ft in floor area)	C	C	C	-	x
Outdoor commercial recreation	C	C	C	C	x
Agriculture	C	C	C	P	
Campground	-	-	-	P	x
Public Service and Utility Uses					
Public safety/service facility	P	P	P	P	x
Telecommunication tower, wireless comm. facility.	-	C	C	C	x
Utility buildings and substations	C	C	C	C	x

Note: P = Permitted Use; C = Conditional Use

13-603. Site design considerations. Development of land within the residential districts shall follow established standards for traffic circulation, landscape design, and other considerations as specified in Chapter 13-1600, Specific Development Standards, and Chapter 18, Site Plan Review.

13-604. Lot dimension and building bulk requirements. Lot area and setback requirements shall be as specified in Table 6-2, Lot Dimension and Setback Requirements.

Table 6-2. Lot Dimension and Setback Requirements, Residential Districts

	RR	R-1	R-2	R-3
Minimum Lot Area (sq. ft.)				
Single-Family Detached Dwelling	10,000 [a]	7,500	5,000	5,000
Duplex (per building)		7,500	5,000	5,000
Semi-Detached Dwelling (per lot)	-	6,000	4,000	4,000
Single-Family Attached	-	-	2,500 or 15/ac (the lesser) [d]	2,500 or 15/ac (the lesser) [d]
Multifamily Dwelling (per unit)	-	-	see 13-607	see 13-607
All Other Uses (per lot):		10,000	10,000	10,000
Minimum Lot Width (feet)				
Single-Family Detached Dwelling	75	75	45	45
Duplex (per building)		75	45	45
Semi-Detached Dwelling (per lot)	-	40	30	30
Single-Family Attached	-		25	20
Multifamily Dwelling (per building)	-		40	40
Minimum Building Width (feet)		see note b		
Maximum Height (feet/stories)	35/2.5[g]	35/2.5[g]	35/3[g]	45/4[g]
Building Setback Requirements (feet)				
Front Yard	20 [c,h]	15 [c,h]	15 [c,h]	15 [c,h]
Side Yard [e, f,i,j]	6/8 ea.	6/8 ea.	6 ea.	10 ea.
Rear Yard	25	25	25	25
Garages (attached)	25	20	20	20

Notes to Table 6-2:

a. For lots in the RR district without City services, minimum lot area shall be 10 acres. Other lot dimensions shall be as specified in Table 6-2. See Section 13-605.
b. The minimum building width on any side shall be at least twenty-five (25) feet, not including any entryways or other structures that do not run the full length of the building.
c. Where at least fifty (50) percent of the front footage of any block is built up with principal structures, the front yard setback for new structures shall be equal to the average of the existing structures, except that any structure which is set back twenty (20) percent more or less than the average may be discounted from the formula.
d. If townhouses are developed on parcels where only the land immediately beneath each dwelling unit constitutes an individually-described lot and all other land constitutes common properties, the density requirement rather than the minimum lot size shall apply to the entire parcel.
e. Side yards setbacks shall apply to the ends of attached or semi-detached dwellings.
f. Corner properties: The side façade of a corner building adjoining a public street shall maintain the front setback of the adjacent property fronting upon the same public street. If no structure exists on the adjacent property, the setback shall be a minimum of ½ the required front yard setback of the subject property's zoning district.
g. Heights of structures may be increased with a conditional use permit as permitted in 13-205.
h. Covered porches are permitted in the front setback compliant with the conditional use permit requirements found in 13-205.
i. Lots containing less than 60 feet of public street frontage may have a side yard reduction to 6 feet for primary buildings.
j. 6 feet for a single story, 8 feet for a story and a half or greater.

13-605. Unserviced lots, RR District. All lots developed without city sewer and public water service shall meet the following standards:

(a) Lots, houses, and other structures, driveways, and any new streets shall be located in compliance with the comprehensive plan and any more detailed area plans for future roads, utilities, and drainage.

(b) The Planning Commission may require a sketch plan showing how the entire tract could be divided when city services become available. Lots and buildings shall be sited and streets shall be laid out to facilitate future subdivision.

(c) (Amd. GO 38-08) The 10-acre limit in the RR District may be reduced subject to the following development standards:

(1) It is relatively similar to other existing parcels in the area.
(2) An area development plan is submitted and approved for the remaining property and the parcel being created.
(3) All efforts should be taken to insure that the existing home and lot will:
   a. Comply with future setbacks.
   b. Fit with the surrounding future development and the parcels future development.
   c. Provides for existing utilities, septic and well currently servicing the home.
(4) Lot size will be determined by the Planning Commission based on a reasonable determination of the area development plan and future lot lines.
(5) Remnant parcel shall not be less than 10 acres.
(6) The maximum lot to be created should not be greater than 2.5 acres.
(7) The land division should meet all remaining standards of Ch. 14, Subdivision and Platting, Green Bay Municipal Code.

13-606. Lot area requirement, R-2 District. The lot area requirement for multifamily uses in the R-2 District is two thousand (2,000) square feet per one bedroom dwelling unit plus five hundred

CHAPTER 13-1800. SITE PLAN REVIEW

SECTION 1. GENERAL PROVISIONS

13-1801. Purpose. The purpose of the site plan review process is to encourage quality development in the City of Green Bay that reflects the goals set forth in the City of Green Bay Comprehensive Plan, while allowing flexibility in the design process. The comprehensive plan recommends better integration of diverse land uses and transportation modes through improved standards for site planning and design, including standards for building and parking placement, pedestrian connections, signage, and landscape improvements.

13-1802. Applicability. Site plan review shall apply to all new construction, remodeling, or expansion or change of uses, with the following exceptions:

(a) The use is established in an existing building that has received site plan approval, and the establishment of the use does not alter the approved site plan for the property.

(b) Proposed modifications are strictly related to the interior of the building.

(c) Modifications, additions, or enlargements to a building which do not increase the gross floor area by more than 500 square feet or 10 percent, whichever is less, and which do not require a variance from the provisions of this ordinance.

(d) (Rep. & Rec. GO 42-10) Existing parking areas that are patched and/or resurfaced are not required to file a site plan. Existing parking areas up to 500 sq. ft. may be rehabilitated or reconstructed in a one-year period without a site plan.

(e) Grading or site preparation that results in minor modifications to the existing site, as approved by the City Engineer.

(f) Construction, alteration of expansion of a public right-of-way, or any part thereof.

SECTION 2. PLAN REQUIREMENTS AND REVIEW PROCESS

13-1803. Site plan requirements.

(a) In general. Except in those instances specified in Section 13-1802, site plan approval is required prior to issuance of a building permit for any proposed construction or issuance of a zoning certificate for any proposed use. When a site plan is required in support of a request for conditional use permit or variance approval, the plan shall also be subject to the requirements of this chapter.

(b) Required information. All site plans shall be drawn to scale and shall contain the following information, unless otherwise specifically waived by the Zoning Administrator or his or her designated representative:

(1) Project name, location, developer, and designer of the project.

(2) Date of plan preparation, scale, and north arrow.

(3) A map showing the location of any railroads, major streams or rivers, wetlands, environmentally sensitive areas, and public streets in the vicinity of the site.

(4) Property dimensions and boundaries.

(5) Location, identification, and dimensions of existing and proposed:

a. Topography of the site and adjacent areas within 50 feet by contour lines at intervals of not more than five (5) feet.

b. Public rights-of-way and easements.

c. Onsite parking facilities, drives, and walkways, including direction of traffic flow, excludes one and two family developments.

d. Buildings and structures, including gross and useable floor area (categorized as interior or exterior uses).

e. Service areas and loading docks, excludes one and two family developments.

f. Freestanding signs, light fixtures, fences, and other site furnishings, excludes one and two family developments.
g. Stormwater management facilities, including ponds, drainageways, and drainage patterns, with directional arrows showing the proposed flow of stormwater runoff from the site.
h. Landscaping materials, including sizes and locations.
i. Renderings of all building elevations, including colors to be used, signage, and listing of finish materials (samples of exterior finish materials may be required). This requirement shall only apply under the in-fill lot definition.
j. Site statistics, including gross square footage of both site and buildings, floor area ratio, percentage of impervious surface, and parking calculations.
k. All other information deemed necessary by the Zoning Administrator, but will not include additional restrictions or information that is not already specified in the zoning code..

(6) When a site is to be developed in stages, the plan should indicate the ultimate development of the site and proposed developmental phases.

13-1804. Administrative site plan review.

(a) In general. The Community Development Review Team (CDRT) shall conduct the administrative review of all site plan approval requests. All findings and decisions of the CDRT shall be final, subject to appeal to the Zoning Board of Appeals or Planning Commission and City Council, as specified in Chapter 2, Administration.

(b) Required findings. The Community Development Review Team shall make each of the following findings before approving a site plan approval request:

(1) The site plan conforms to all applicable standards within this chapter.
(2) The site plan conforms to all applicable regulations of this ordinance and is consistent with the applicable policies of the comprehensive plan.
(3) The site plan is consistent with any applicable functional or special area plans or development objectives adopted by the City Council.
(4) The site plan minimizes any adverse effects of property in the immediate vicinity and minimizes congestion of the public streets.

(c) Conditions of site plan approval. The CDRT may impose conditions on any proposed site plan and require such guarantees as it deems necessary for the protection of the public interest and to ensure compliance with the standards and purposes of this ordinance, the applicable policies of the Land Use Plan, and any special land use plans adopted by the City Council.

(d) Changes to approved site plan. An approved site plan may not be changed, modified, or altered in any manner without the approval of the city. If the Zoning Administrator determines that such changes are minor in nature, a revised site plan may not be required. In all other cases, a revised site plan shall be re-submitted for consideration by the CDRT.

(e) Expiration of approved site plan. Unless a written extension request is submitted to and approved by the Zoning Administrator , an approved site plan shall expire upon either of the following conditions:

(1) A new site plan for the property is submitted to and approved by the Community Development Review Team.
(2) A building permit has not been issued within two (2) years from the date of site plan approval.

(f) Inspection and enforcement. Before issuing a certificate of occupancy and/or zoning certificate for any use not exempted under Chapter 13-1802, the Zoning Administrator shall conduct an inspection to determine compliance with the conditions set forth on the approved site plan for the project. A temporary certificate of occupancy may be issued without completion of all elements on the site plan, provided written assurance is given that all improvements will be completed when feasible.

CHAPTER 13-1700. OFF-STREET PARKING, DRIVES, AND LOADING

SECTION 1. GENERAL PROVISIONS

13-1701. Purpose. Parking and loading regulations are established to alleviate or prevent congestion of the public right-of-way, to provide for the parking and loading needs of uses and structures, to enhance the compatibility between parking and loading areas and their surroundings, and to regulate the number, design, maintenance, and location of required off-street parking and loading spaces and access driveways and aisles.

13-1702. Change of use. When the use of a building or site is changed or the intensity of use is increased through the addition of dwelling units, gross floor area, capacity, or other unit of measurement used for determining parking and loading requirements, parking and loading facilities shall be provided for such change or intensification of use as specified in Table 17-2.

13-1703. Existing facilities. Existing parking and loading facilities shall not be reduced below the requirements for a similar new use or, if less than the requirements for a similar new use, they shall not be reduced further.

13-1704. Use limitations. (Amd. GO 26-11) Required parking and loading spaces and the driveways providing access to them shall not be used for storage, display, sales, rental, or repair of motor vehicles or other goods or for the storage of inoperable vehicles or snow. Notwithstanding other provisions of this ordinance, any residentially-permitted vehicle shall be permitted to park in the front yard, side yard, or rear yard setbacks of any single-family or two-family dwellings on the days games are played in Green Bay by professional football teams of the National Football League. The Director of Planning and/or Director of Public Works may permit residential vehicles to be parked on the front, side, and rear yard of single- and two-family dwellings during the day of a special event held at Lambeau Field when the event is expected to exceed an estimated attendance of 20,000 or more individuals.

SECTION 2. DRIVEWAYS

13-1705. Residential driveways. The following regulations apply to single- and two-family residential uses. (Amd. GO 22-07)

(a) (Amd. GO 7-10) (Amd. GO 8-12) The maximum width of any driveway at the curb line shall be no greater than 30 feet and symmetrically tapered to a driveway width at the sidewalk section or property line no greater than 25 feet. Driveway stalls may be allowed up to 10 feet in width and an additional two feet may be provided beyond either side of the garage door for two stall or larger attached garages. For attached single stall garages 10 feet or less in width, the driveway may be expanded up to 8 feet beyond the garage door opening, but shall not be located in front of the primary entrance to the residence and shall be consistent with this Section and Section 13-1709. The widened portion of the driveway must be tapered into the driveway at the property line over a distance of 5 feet or more. In no case shall the maximum driveway width be greater than 50 percent of the lot frontage.

(b) Driveways shall lead directly to a garage opening or parking space unless it is a drive as specified below.

(c) Driveways may be designed as one of the following:

(1) Side-loading drives: The driveway shall not be located within the side yard setback. The curb cut shall not be greater than 17 feet in width and shall taper over no more than 5 feet to a maximum of 12 feet in width within the front yard setback. The driveway width may extend to the width of the garage opening once outside the front yard setback.

(2) Circular drives: The driveway shall not be located within the side yard setback. The curb cut shall not be greater than 17 feet in width and shall taper over no more than 5 feet to a maximum of 12 feet in width within the front yard setback. The top of the inner arc of the drive shall be located a minimum of 15 feet from the right-of-way line or front property line. The interior area between the drive and the street must be appropriately landscaped.

(3) Alley drives: The driveway may extend to the garage opening or may extend into the lot for 30 feet in width and 40 feet in depth, but in no case shall it extend into the side yard setbacks. In no case shall the driveway width be greater than 50 percent of the lot width.

Driveway Design Regulations

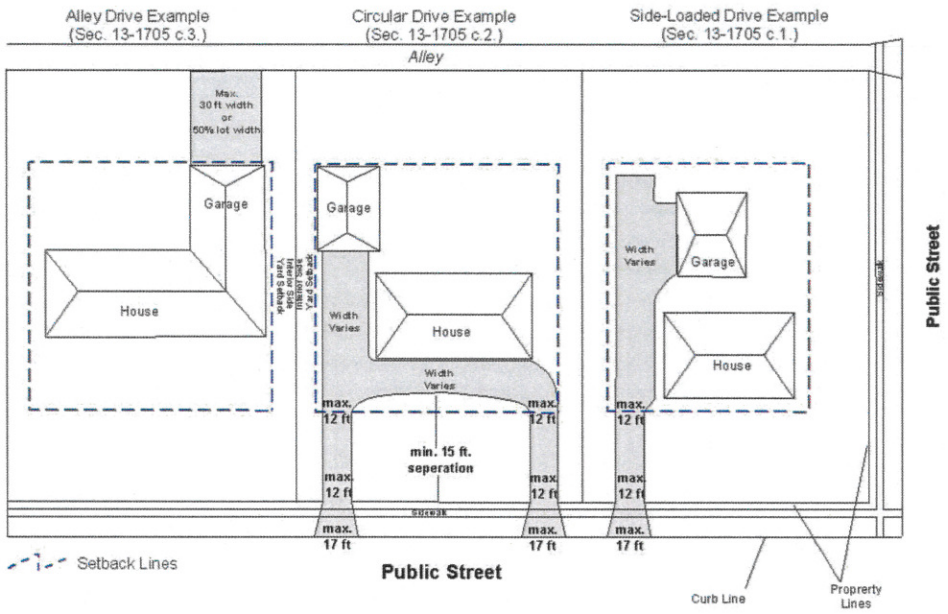

(d) Number of driveways.

(1) A maximum of one 2-way driveway or one 1-way driveways for single-family uses shall be permitted from each street right-of-way to which a lot or parcel has frontage, subject to the driveway design regulations specified herein.

(2) A maximum of one driveway per dwelling unit is permitted for two-family uses, subject to the driveway design regulations specified herein.

13-1706. Nonresidential and multifamily driveways. The following regulations apply to all nonresidential and mixed uses, as well as multifamily and single-family attached uses.

(a) Double or two-way drives.

PRIMARY USE OF DRIVE	MAXIMUM WIDTH AT PROPERTY AND SETBACK LINE	MAXIMUM WIDTH AT CURB LINE
Autos and Single Axle Trucks	20 feet	30 feet
Semi-Trailers	25 feet	35 feet

Interim Manufactured Perimeter Control and Slope Interruption Products
(1071)

Wisconsin Department of Natural Resources
Conservation Practice Standard

I. Definition

Manufactured perimeter control and slope interruption products include a variety of products designed to detain or slow the flow of sediment-laden sheet flow runoff from small areas of disturbed soil. This definition does not include sediment bale barriers or silt fence which are covered under Conservation Practice Standards 1055 and 1056 respectively.

II. Purpose

The purpose of the installation of these products is to reduce uninterrupted slope length to slow the velocity of runoff so as to retain transported sediment from disturbed areas.

III. Condition Where Practice Applies

A. This standard applies to the following conditions:

1. Where only *sheet and rill erosion* occurs unless the product is listed as approved for use in concentrated flow areas (channel erosion) as a ditch check on the Wisconsin Department of Transportation (WisDOT) Erosion Control Product Acceptability List (PAL) and is designed and installed in accordance with WDNR Technical Standard 1062. All products that are not approved for use in concentrated flow areas and are to be installed on a slope that terminates in a channel shall be installed at an elevation no lower than 6 inches above the design flow depth of the channel.

2. Where usage is limited to 12 consecutive months.

3. Where conditions allow for proper installation as outlined in the Criteria Section V and maintenance as outlined in Criteria Section VIII.

B. Under no circumstance should products be used in the following applications:

1. Below the ordinary high watermark or placed perpendicular to flow in streams.

2. Where the maximum gradient upslope of the product is steeper than 50% (2:1).

IV. Federal, State and Local Laws

Users of this standard shall be aware of potentially applicable federal, state and local laws, rules, regulations or permit requirements governing manufactured perimeter control and slope interruption products. This standard does not contain the text of federal, state, or local laws.

V. Criteria

This section establishes the minimum standards for design, installation and performance requirements. Only products approved by the Wisconsin Department of Commerce (Commerce) for use on projects regulated under the Uniform Dwelling Code or products listed on the WisDOT PAL for use as ditch checks, perimeter control, or slope interruption will be accepted for use in this standard. The Commerce approval process is outlined in the document titled "Wisconsin Department of Commerce Manufactured Perimeter Control and Slope Interruption Product Approval Process (Commerce product approval process)."

A. **Product Classes** – Products are organized into product classes based on the installed product height as illustrated on Figure 1. Product classes are specified in Table 1.

Table 1	
Product Height Class	**Installed Height Above Grade (inches)**
Class I	Mat Products
Class II	6-9
Class III	10-15
Class IV	16-20
Class V	>20

B. **Placement**

1. Products should be placed on the contour whenever possible. J-hooks may be used for sloping installations of log-type products. See Figure 1 for installation illustrations for log-type products.

2. Products should not be placed perpendicular to the contour.

3. The ends of product installations should be extended upslope to prevent water from flowing around the ends of the product.

4. Products that are placed on a curved alignment shall be installed at a large enough radius of curvature to prevent kinking.

C. **Entrenchment**

1. *Log – Type Products*

a) Disturbed Ground – Log-type products installed on disturbed ground shall be entrenched a minimum of 2 inches to ensure continuous ground contact.

b) Vegetated Ground – Log-type products installed on vegetated ground may be installed without entrenchment. All gaps and ruts creating an undercutting situation shall be filled with soil or log-type product filter media.

c) Frozen Ground

i. No entrenchment required.

ii. Only products approved for installation on frozen ground under the Commerce product approval process or listed in the WisDOT PAL for installation on frozen ground may be installed on frozen ground.

iii. Products installed on frozen ground shall be assessed for effectiveness upon ground thaw and staked or replaced as needed.

2. *Other Products* – Products other than log-type products shall be entrenched as required by the manufacturer or as specified under Commerce product approval stipulations.

D. **Overlap** – Minimum 24 inches or as required by the manufacturer if more restrictive. Overlap should be shingled in the direction of flow. See Figure 1.

E. **Support** – Stake or anchor as needed to maintain constant ground contact along the entire length of product at all times and to prevent lateral movement and/or floatation. Staking or anchoring shall be performed per manufacturer's recommendations or as specified under Commerce or WisDOT product approval stipulations.

F. **Product Stacking** – Products shall not be stacked individually on top of one another. Products may be stacked in a "pyramid" manner (i.e., one on top of two) or for operation and maintenance purposes as stipulated in Section VIII.C.

G. **Maximum Spacing** – The spacing in direction of slope shall not exceed the maximum slope lengths for the appropriate slope as specified in Table 2.

Table 2					
	Max. Spacing (ft) per Product Class				
Slope	**I**	**II**	**III**	**IV**	**V**
0-2%	30	30	55	75	100
2.1-5%	25	25	40	55	75
5.1-10%	15	15	30	40	50
10.1-33%	NA	10	15	20	25
>33%	NA	5	10	15	20

Notes:
1. NA = Not Allowed
2. Products from a higher class are suitable for applications in a lower class.
3. Manufacturer's recommendations for maximum slope and maximum spacing should be used if more restrictive than the guidelines established above.

H. Products should be installed prior to disturbing the upslope area and/or when changes in disturbed slope or slope length require the installation of additional products.

I. The width of mat type products used for perimeter control/slope interruption shall be as specified in the product approval from Commerce or as specified in the WisDOT PAL.

J. **Filter Media**

1. Filter media used in any product shall be non-toxic and may not present a hazard to human health or the environment.

2. Filter media shall be compatible with any substance for which it is expected to come into contact with during use.

3. Polymer used in any product shall conform to WDNR Technical Standard 1050 and/or 1051 as applicable.

4. Filter media consisting of reused materials that are regulated as solid waste under ch. NR 500, Wisconsin Administrative Code shall have received an exemption under s. NR 500.08(5), Wisconsin Administrative Code prior to use in an erosion control product.

5. Compost used in any product shall conform to WDNR Specification S100 compost.

VI. Considerations

A. To protect products from damage in areas of active construction or heavy traffic, products should be flagged, marked or highlighted to improve visibility.

B. To help ensure effectiveness, products should be inspected and repaired as necessary prior to forecasted rain events.

C. Vehicular traffic should be diverted around the product unless allowed under the manufacturer's specifications.

D. When products are used to divert runoff, discharge should be made to a stabilized area or sediment control practice.

E. Products may be used in conjunction with other practices such as Seeding for Construction Site Erosion Control (1059), Non-channel Erosion Mat (1052), Mulching for Construction Sites (1058), or Vegetative Buffer for Construction Sites (1054) to enhance performance.

VII. Plans and Specifications

A. Plans and specifications for installing products shall be in keeping with this standard and shall describe the requirements for installing the product to achieve its intended purpose. The plans and specifications shall address the following:

1. Location of product

2. Contributory drainage area

3. Schedules

4. Product specifications

5. Standard drawings and installation details

6. Restoration after removal

B. All plans, standard detail drawings, or specifications shall include a schedule for installation, inspection, and maintenance. The responsible party shall be identified.

VIII. Operation and Maintenance

A. Products shall be inspected at least weekly and within 24 hours after every precipitation event that produces 0.5 inches of rain or more during a 24-hour period.

B. If the product becomes undermined, the voids shall be backfilled with soil and compacted to establish continuous contact between the ground and product.

C. If sediment reaches ½ of the log-type product height, the sediment shall be removed or a second log-type product may be positioned immediately upslope and in contact with the original log-type product.

D. If a product rolls out of position, the product shall be repositioned and secured with additional stakes.

E. Holes, rips or tears in the fabric of a log-type product less than 12 inches in any direction and located within the top 1/3 of the product may be repaired by stitching or wrapping a new piece of fabric around the product and securing. Sections of log-type product with holes, rips, or tears greater than or equal to 12 inches in any direction or located within the bottom 2/3 of the product shall be removed and replaced with new product or a second log-type product may be placed immediately upslope with a minimum 24 inches of overlap beyond the hole, rip, or tear.

F. Pinched, settled, or deformed log-type products may be re-contoured to their original diameter by hand if possible or a second log-type product shall be placed immediately upslope with a minimum 24-inch overlap beyond the deformation.

G. Destroyed or irreparable sections of log-type product shall be removed and replaced with new log-type product or a second log-type product may be placed immediately upslope with a minimum 24-inch overlap beyond the deformation.

H. Mat products shall be replaced when visible sediment covers 50% of the installed width or if damaged or degraded. A second mat may be placed immediately adjacent to or on top of the first mat in lieu of replacement.

I. Once the area the product is serving has been stabilized, the product should be removed and disposed of in accordance with relevant Federal, State, or Local regulations and per the manufacturer's recommendations.

IX. References

WDNR Technical Standard 1050 – Land Application of Anionic Polyacrylamide

WDNR Technical Standard 1052 – Non-channel Erosion Mat

WDNR Technical Standard 1054 – Vegetative Buffer for Construction Sites

WDNR Technical Standard 1055 – Sediment Bale Barrier (Non-Channel)

WDNR Technical Standard 1056 – Silt Fence

WDNR Technical Standard 1058 – Mulching For Construction Sites

WDNR Technical Standard 1059 – Seeding For Construction Site Erosion Control

WDNR Technical Standard 1062 – Ditch Check (Channel)

Wisconsin Department of Commerce Manufactured Perimeter Control and Slope Interruption Product Approval Process (http://www.commerce.state.wi.us/SB/docs/SB-SoilErosionControlInterruptProc.pdf)

Wisconsin Department of Transportation Erosion Control Product Acceptability List (http://www.dot.wisconsin.gov/business/engrserv/pal.htm)

X. Definitions

Channel Erosion: The deepening and widening of a channel due to soil loss caused by flowing water. As rills become larger and flows begin to concentrate, soil detachment occurs primarily as a result of shear.

Sheet and Rill Erosion (III.A.1.): Sheet and rill erosion is the removal of soil by the action of rainfall and shallow overland runoff. It is the first stage in water erosion. As flow becomes more concentrated rills occur. As soil detachment continues or flow increases, rills will become wider and deeper forming gullies.

Log-Type Products: Sediment control products constructed of an outer sock of geotextile or other type of netting or permeable containment media surrounding an inner filtering media.

Mat Products: Low profile products consisting of one or more layers of fibrous material designed to slow and filter runoff.

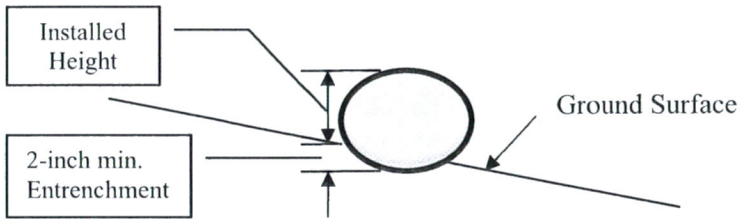

Note:
Installed height is measured from the upslope ground surface to the top of the product. Due to settlement and/or deformation, the installed height may not be equivalent to the nominal diameter of the product.

CROSS SECTION

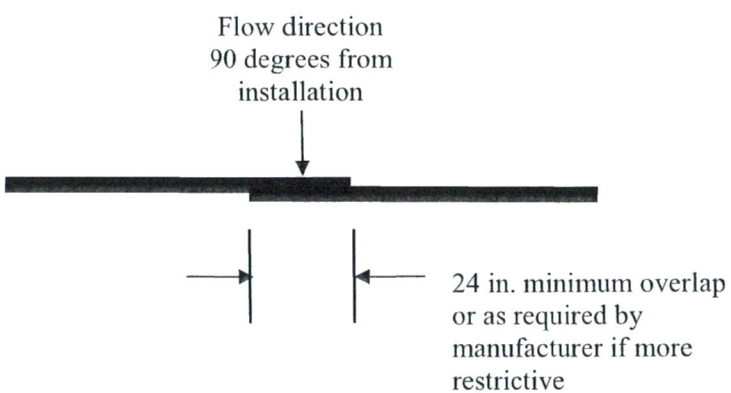

TYPICAL INSTALLATION
(Plan View)

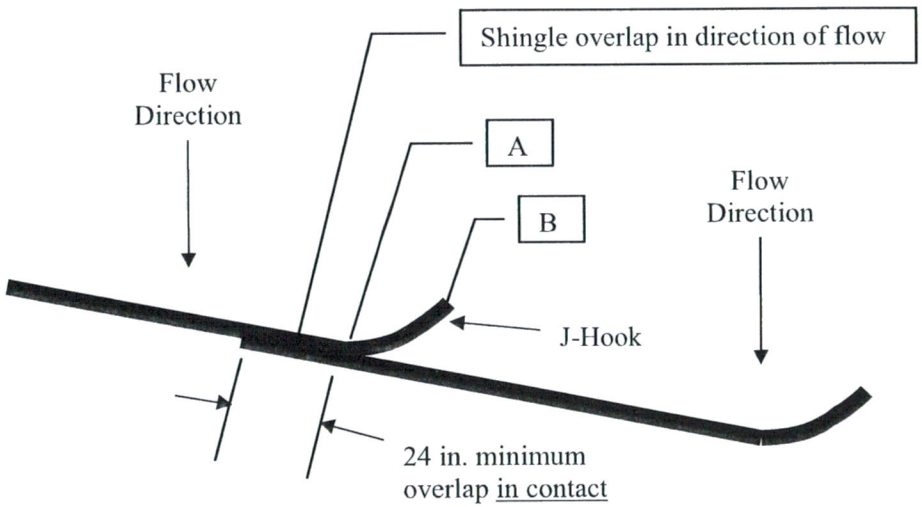

Notes:
1. J-hooks shall be installed so that the ground-product interface elevation at location B is higher than the top of product elevation at location A to create a weir at point A.
2. J-hooks shall be installed every 2 vertical feet of drop along the length of the installation.
3. Stake overlap as required by manufacturer.

SLOPING INSTALLATION
(Plan View)

FIGURE 1
LOG-TYPE PRODUCT INSTALLATION ILLUSTRATION

Storm Drain Inlet Protection for Construction Sites
(1060)

Wisconsin Department of Natural Resources
Conservation Practice Standard

I. Definition

A temporary device installed in or around a storm drain inlet, drop inlet, or curb inlet.

II. Purposes

This practice is intended to minimize sediment from entering storm drainage systems in areas where the contributing drainage area is temporarily disturbed.

III. Conditions Where Practice Applies

This practice applies where runoff from construction sites enters conveyance system structures, such as drain inlets, drop inlets, and curb inlets. Inlet protection devices are for drainage areas of one acre or less. Runoff from areas larger than one acre shall be routed through a properly designed sediment trapping or settling practice upstream of the inlet.

IV. Federal, State, and Local Laws

Users of this standard shall be aware of applicable federal, state and local laws, rules, regulations, or permit requirements governing the use and placement of storm drain inlet protection. This standard does not contain the text of federal, state, or local laws.

V. Design Criteria

This section establishes the minimum standards for design, installation, and performance requirements.

The appropriate type of inlet protection shall be installed prior to drain, drop, or curb inlet receiving runoff. The device shall remain in place and be maintained until the disturbed area is stabilized.

A. General Criteria Applicable to All Inlet Protection Devices

1. Ponding water to settle sediment is encouraged; however ponding shall not interfere with the flow of traffic, create a safety hazard, or cause property damage. All devices shall have provisions such as overflow holes or "emergency spillways" to safely pass water if the device becomes clogged.

2. The contributing drainage area to the inlet protection device shall be one acre or less. In instances where a larger contributing drainage area exists, runoff shall be routed through a properly designed sediment trapping or settling practice upstream of the inlet.

3. No gaps shall be left in the material that would allow the flow of water to bypass the inlet protection device, except for overflow holes.

4. All fabrics used as part of Type A, B, C, D, D-M and D-HR inlet protection devices must meet WisDOT specifications for the selected fabric.

5. Type FF geotextile fabric shall be used for Type, A, B, C or D inlet protection.

6. Type D-M inlet protection fabric shall be Type FF for both the upper section and the outer lower sections of the device. The replaceable interior filter fabric type shall be based according to the particle size trapped. Refer to Table 1 for the filter fabric type and exposed soil particle diameter where the device is appropriate.

7. Type D-HR inlet protection fabric shall be Type FF for the upper half of the device. Type HR fabric shall be used in the lower half of the device. Refer to Table 1 for filter fabric type and exposed soil texture and particle diameter where the device is appropriate.

Table 1			
Exposed Soil Texture	**Exposed Soil Particle Diameter (average) (mm)**	**Filtering Fabric Type***	**Recommended Inlet Protection Device Type**
Course (Sand)	≥ 0.0625	FF	D, D-M
Medium (Silt Loam)	0.0624 – 0.005	DF	D-M
Fine (Clay)	≤ 0.004	R	D-M
		HR	D-HR

* DF, R or HR filters may be used where FF is the required minimum standard. R or HR filers may be used where DF is the required minimum standard.

B. Criteria Applicable to Inlet Protection Devices for Unpaved Areas or the Pre-Paving Phase of Construction

1. Inlet protection (all device types) - See Figures 1-3.

   a. Type A devices shall be utilized around inlets in unpaved areas and should be maintained until permanent stabilization has been established. Type A devices shall be utilized on inlets prior to installation of curb and gutter or pavement and where safety considerations are not compromised on the site.

   b. Type B and C devices shall be utilized after the casting and grate are in place and may only be utilized when sufficient depth is not available to use Type D, D-M, or D-HR devices.

   c. Inlet protection Type D-M and D-HR devices shall only be used after castings are in place on top of the inlet boxes.

   Type D, D-M, and D-HR devices shall conform to the standard drawings as shown in the figures. To prevent the filter bag from blocking overflow water, there shall be three inches of clearance between the bag and the sides of the inlet. Type D, D-M and D-HR devices when used in inlets less than 30 inches in depth shall have the filter bag cinched to provide the required clearance for overflow.

2. Other inlet protection devices include, but are not limited to: straw bales, rock bags and stone weepers. These devices can be used to settle sediment or divert flow. Note: these devices are not applicable to areas adjacent to traffic.

C. Criteria Applicable to Inlet Protection Devices for the Post-Paving / Curbing Phase of Construction

1. Inlet protection Types B, C, D, D-M, and D-HR are applicable to post-paving construction. See Figures 1-3.

   a. Type B devices shall be utilized on inlets without a curb box when Type D inlet devices cannot be used.

   b. Type C devices shall be utilized on street inlets with curb heads. A 2-inch by 4-inch (nominal) piece of wood shall be wrapped and secured in the fabric and placed in front of the curb head, as shown in the figures. The wood shall not block the entire opening of the curb box and shall be secured to the grate with wire or plastic ties. Use Type C devices when Type D devices cannot be used.

   c. Utilize Type D, D-M, and D-HR devices when the depth from the top of the grate to the bottom of the inlet is 30 inches or greater. Note: Type D style devices can be modified by cinching the filter bag to fit inlet structures that are less than 30 inches in depth.

   d. Utilize Type D, D-M, and D-HR devices where street flooding or ponding water and the associated traffic safety issues are a concern, or where more effective inlet filtering is needed.

2 Other inlet protection devices are applicable to post paving construction; these devices include but are not limited to: rock bags, manufactured bags, and stone weepers. These devices can be used to either settle sediment or divert flow. Note: other than for internal to the inlet type filters these devices are not applicable to areas adjacent to traffic.

a. Manufactured rock bags shall conform to the WisDOT standard for rock bag material, including fill material.

b. Straw bale installation shall conform to the criteria outlined in the WDNR Conservation Practice Standard (1062) Ditch Check.

c. Stone weeper installation shall conform to the criteria in WDNR Conservation Practice Standard (1063) Sediment Trap.

VI. Considerations

A. Inlet protection is only one element in an erosion control plan. Other practices, including temporary stabilization and area clean up, should also be utilized upstream of the inlet.

B. Inlets should be temporarily closed or sealed to prevent entrance of runoff and sediment when site conditions allow.

C. The disturbed area should be stabilized as quickly as possible. Timely stabilization is the most effective method to control sediment entering the storm sewer.

D. Storm drain inlet protection consists of several different types of inlet filters and sediment traps. Inlet protection is only one element in an erosion control plan. Each type differs in application with selection dependent upon site conditions and inlet type. Not all designs are appropriate in all cases. The user must carefully select a design suitable for the needs and site conditions.

E. Inlet protection is only as effective as the filter or device used around the inlet. Effectiveness decreases rapidly if the inlet protection is not properly maintained. In general, inlet protection provides relatively good removal of coarse and medium-sized soil particles from runoff; however, to effectively trap fine soil particles, other practices such as the use of polyacramides, may be required. (See DNR technical standard 1050)

F. Inlet protection requires routine inspection and maintenance. Field inspections have shown where inlet protection causes excessive ponding that the device is removed, punctured, or bypassed. In such situations, a structure with an adequate overflow mechanism should be utilized instead of simply removing the inlet protection device.

G. The effectiveness of inlet protection devices in unpaved areas can be enhanced by additional excavation to increase the storage capacity around the inlet.

H. Good construction site housekeeping measures, such as maintaining clean gutters and street sweeping, are important.

I. The use of fabric intended for a finer soil type on a construction site with coarser soil may increase the required maintenance frequency due to faster clogging.

J. Consider using Type D-M and D-HR inlet protection rather than Type B, C, or D in areas with fine soils where more effective filtering is desired.

VII. Plans and Specifications

Plans and specifications for installing inlet protection shall be in keeping with this standard and shall describe the requirements for applying the practice to achieve its intended purpose:

A. Locations and types of inlet protection.

B. Material specification conforming to this standard.

C. All construction documents shall identify the responsible party and include a schedule for installation, inspection, and maintenance requirements.

VIII. Operation and Maintenance

A. Remove inlet protection devices once the contributing drainage area is stabilized with appropriate vegetation or impervious surface.

B. Inlet protection shall be at a minimum inspected weekly and within 24 hours after every precipitation event that produces 0.5 inches of rain or more during a 24-hour period.

C. For Type A, B or C inlet protection:

1. Remove sediment deposits when sediment has accumulated between ⅓ to ½ of the design depth or the device is no longer functioning as designed.
2. Inspect the device routinely, and repair (if necessary) and restore to original dimension.
3. Sediment removed from the device shall be deposited in a suitable area and stabilized.

D. For Type D and D-M inlet protection;

1. Remove sediment when it accumulates to within 6 inches of the bottom of the overflow holes.
2. If standing water remains within 6 inches of the bottom of the overflow holes 24 hours after a runoff event, accumulated sediment shall be removed and the filtering capacity of the fabric shall be restored.
3. Holes in the Type FF fabric less than 2 inches in length may be repaired by stitching. The bag must be replaced if holes greater than 2 inches are observed in the Type FF fabric.
4. The insert filter fabric shall be replaced if any holes are observed in the fabric.
5. The filter must be replaced if the flap pockets sustain damage that compromises the integrity of the filter or the ability to perform maintenance.

E. For Type D-HR inlet protection:

1. Remove sediment when it has accumulated to within 6 inches of the bottom of the overflow holes.
2. If standing water remains within 6 inches of the bottom of the overflow holes 24 hours after a runoff event, accumulated sediment shall be removed and the filtering capacity of the fabric shall be restored.
3. Holes in the Type FF fabric less than 2 inches in length may be repaired by stitching.
4. The filter shall be replaced if any holes are observed in the Type HR fabric or holes greater than 2 inches are observed in the Type FF fabric.
5. The filter must be replaced if the flap pockets sustain damage that compromises the integrity of the filter or the ability to perform maintenance.

F. Due care shall be taken to minimize sediment falling into the inlet. Any material falling into the inlet shall be removed.

IX. References

WisDOT "Standard Specifications for Highway and Structures Construction" is available at: http://roadwaystandards.dot.wi.gov/standards/stndspec/index.htm

W:\storm water\tech std\ 1060 inlet pro

FIGURE 1. INLET PROTECTION TYPES A, B, C AND D

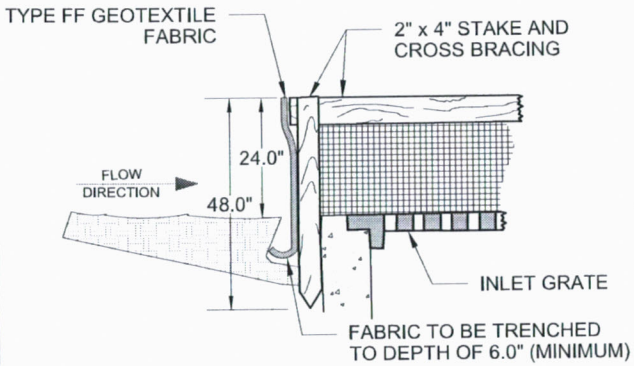

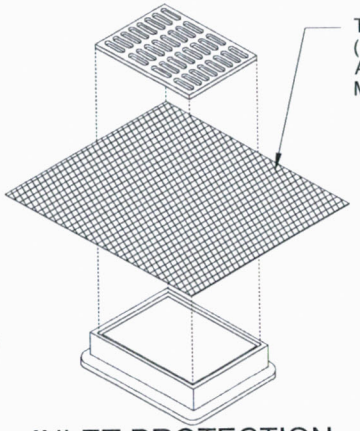

INLET PROTECTION TYPE B
WITHOUT CURB BOX

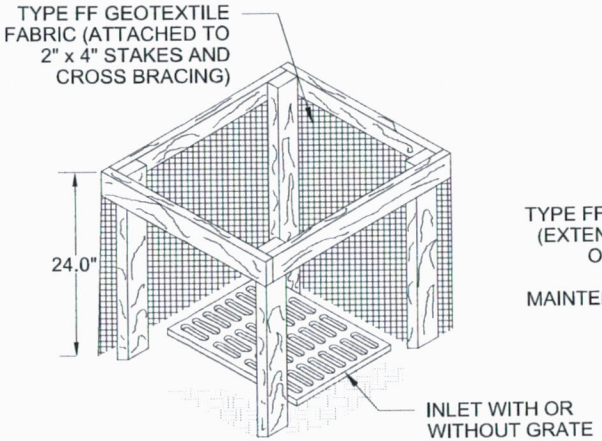

INLET PROTECTION TYPE A

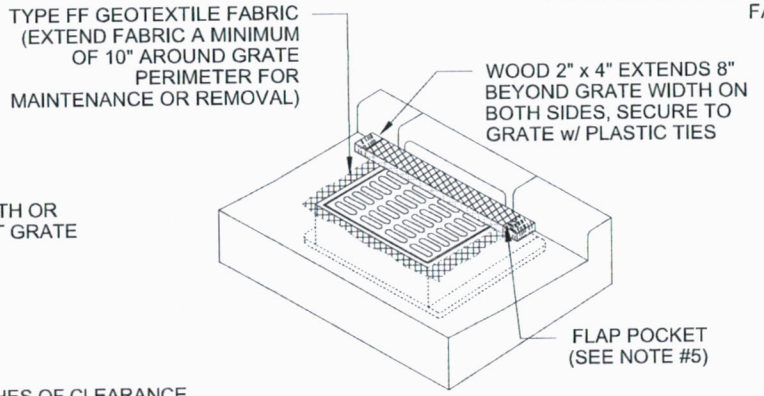

INLET PROTECTION TYPE C
WITH CURB BOX

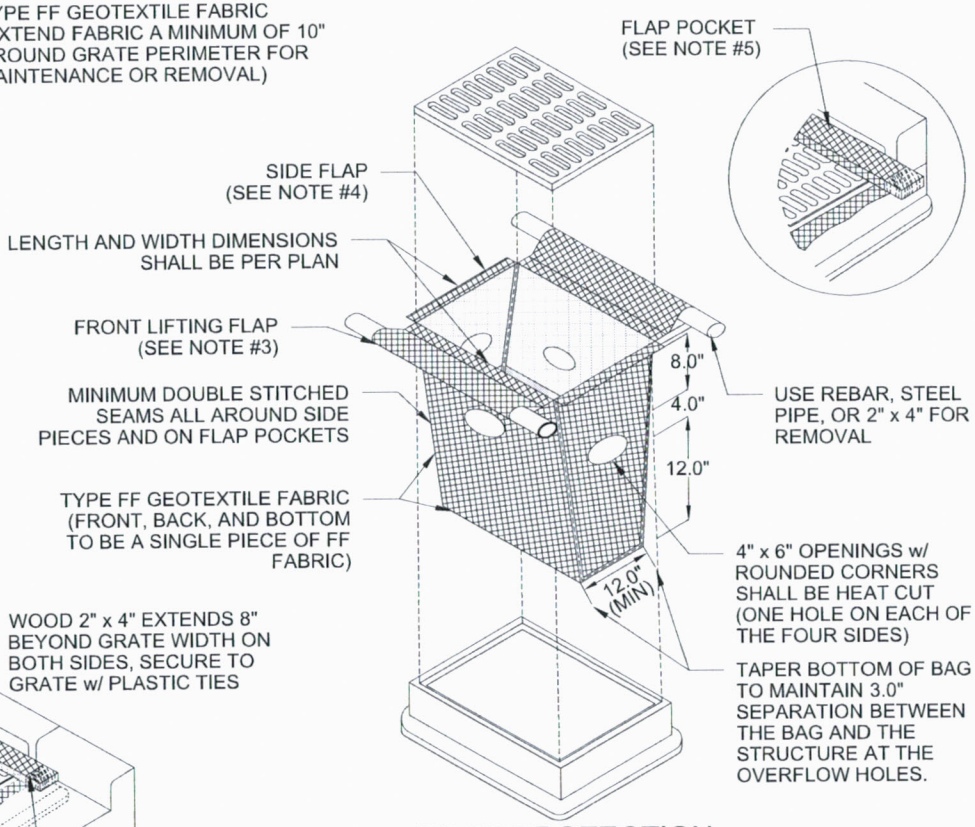

INLET PROTECTION TYPE D
CAN BE INSTALLED IN INLETS WITH OR WITHOUT CURB BOXES

NOTES:

1. TAPER BOTTOM OF BAG TO MAINTAIN THREE INCHES OF CLEARANCE BETWEEN THE BAG AND THE STRUCTURE, MEASURED FROM THE BOTTOM OF THE OVERFLOW OPENINGS TO THE STRUCTURE WALL.
2. GEOTEXTILE FABRIC TYPE FF FOR FLAPS, TOP AND BOTTOM OF OUTSIDE OF FILTER BAG. FRONT, BACK, AND BOTTOM OF FILTER BAG BEING ONE PIECE.
3. FRONT LIFTING FLAP IS TO BE USED WHEN REMOVING AND MAINTAINING FILTER BAG.
4. SIDE FLAPS SHALL BE A MAXIMUM OF TWO INCHES LONG. FOLD THE FABRIC OVER AND REINFORCE WITH MULTIPLE STITCHES.
5. FLAP POCKETS SHALL BE LARGE ENOUGH TO ACCEPT WOOD 2" x 4". THE REBAR, STEEL PIPE, OR WOOD SHALL BE INSTALLED IN THE REAR FLAP AND SHALL NOT BLOCK THE TOP HALF OF THE CURB FACE OPENING.

MAINTENANCE NOTES:

1. WHEN REMOVING OR MAINTAINING INLET PROTECTION, CARE SHALL BE TAKEN SO THAT THE SEDIMENT TRAPPED IN THE FABRIC DOES NOT FALL INTO THE STRUCTURE. MATERIAL THAT HAS FALLEN INTO THE INLET SHALL BE IMMEDIATELY REMOVED.

WISCONSIN DEPT. OF NATURAL RESOURCES

1060	TECHNICAL STANDARD No.
08/2014	REVISION DATE
NOT TO SCALE	

FIGURE 2. INLET PROTECTION TYPE D-M

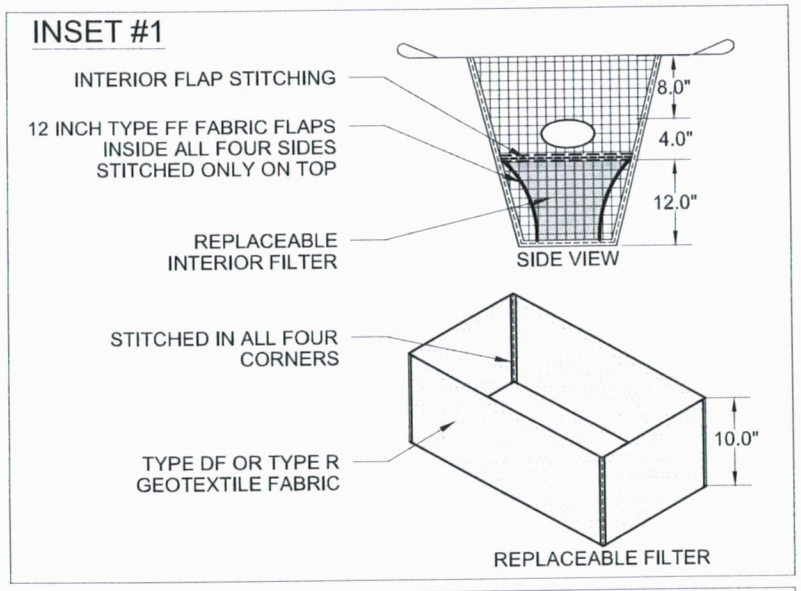

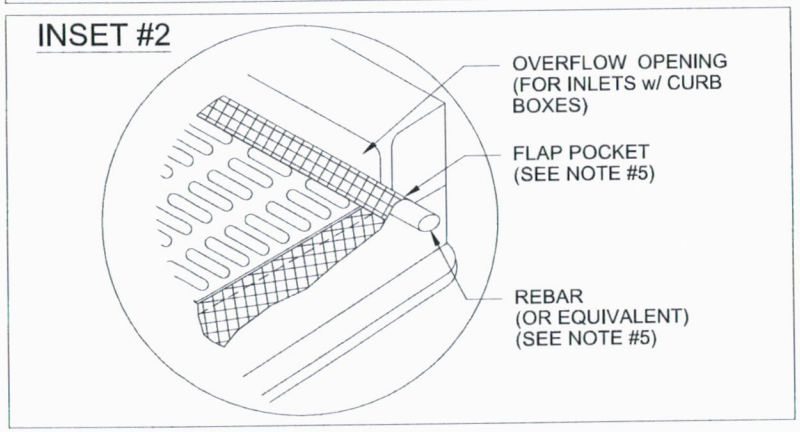

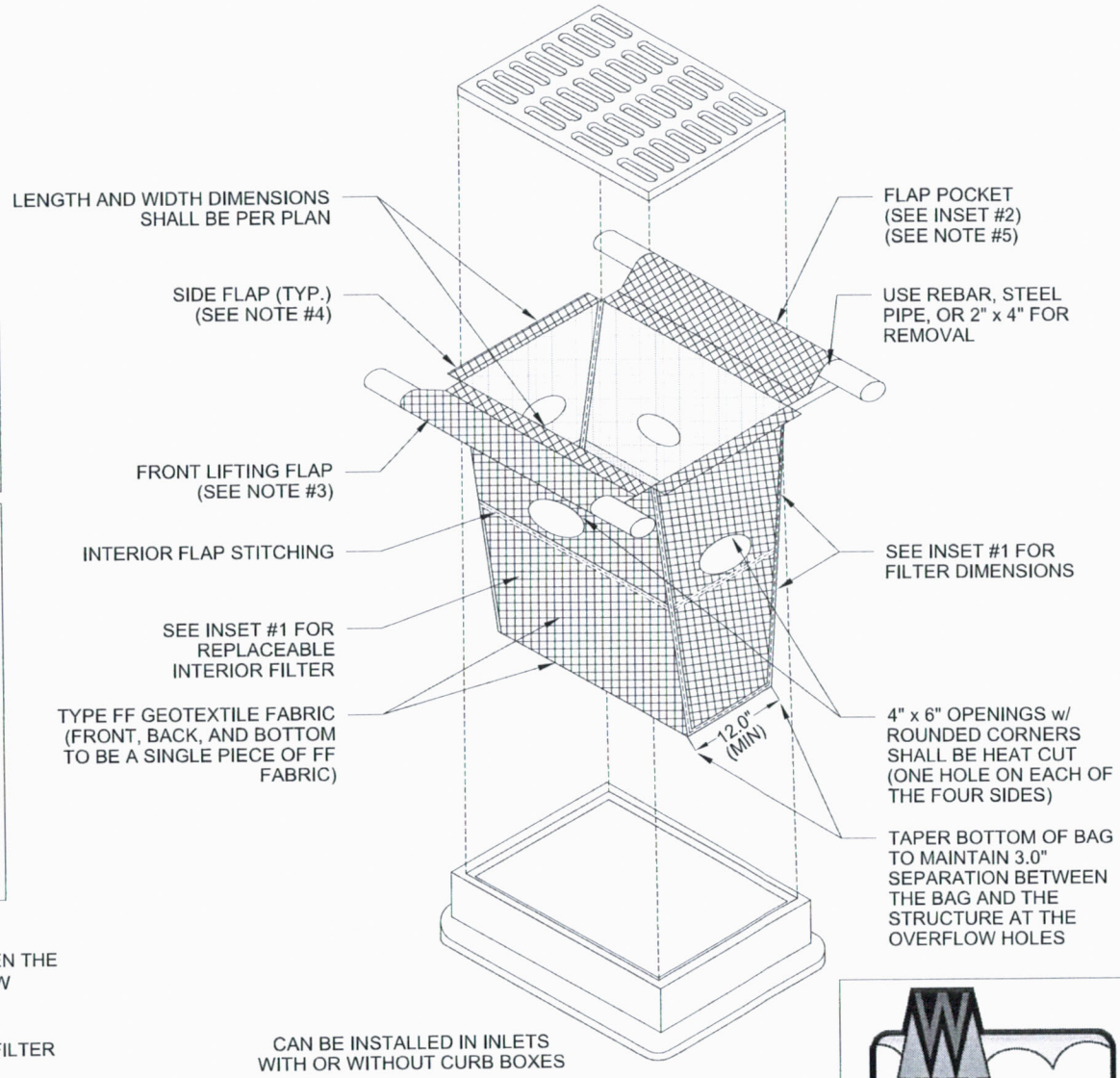

NOTES:

1. TAPER BOTTOM OF BAG TO MAINTAIN THREE INCHES OF CLEARANCE BETWEEN THE BAG AND THE STRUCTURE, MEASURED FROM THE BOTTOM OF THE OVERFLOW OPENINGS TO THE STRUCTURE WALL.
2. GEOTEXTILE FABRIC TYPE FF FOR FLAPS, TOP AND BOTTOM OF OUTSIDE OF FILTER BAG. FRONT, BACK, AND BOTTOM OF FILTER BAG BEING ONE PIECE.
3. FRONT LIFTING FLAP IS TO BE USED WHEN REMOVING AND MAINTAINING FILTER BAG.
4. SIDE FLAPS SHALL BE A MAXIMUM OF TWO INCHES LONG. FOLD THE FABRIC OVER AND REINFORCE WITH MULTIPLE STITCHES.
5. FLAP POCKETS SHALL BE LARGE ENOUGH TO ACCEPT WOOD 2" x 4". THE REBAR, STEEL PIPE, OR WOOD SHALL BE INSTALLED IN THE REAR FLAP AND SHALL NOT BLOCK THE TOP HALF OF THE CURB FACE OPENING.

MAINTENANCE NOTES:

1. WHEN REMOVING OR MAINTAINING INLET PROTECTION, CARE SHALL BE TAKEN SO THAT THE SEDIMENT TRAPPED IN THE FABRIC DOES NOT FALL INTO THE STRUCTURE. MATERIAL THAT HAS FALLEN INTO THE INLET SHALL BE IMMEDIATELY REMOVED.

WISCONSIN DEPT. OF NATURAL RESOURCES

1060	TECHNICAL STANDARD No.
08/2014	REVISION DATE
NOT TO SCALE	

FIGURE 3. INLET PROTECTION TYPE D-HR

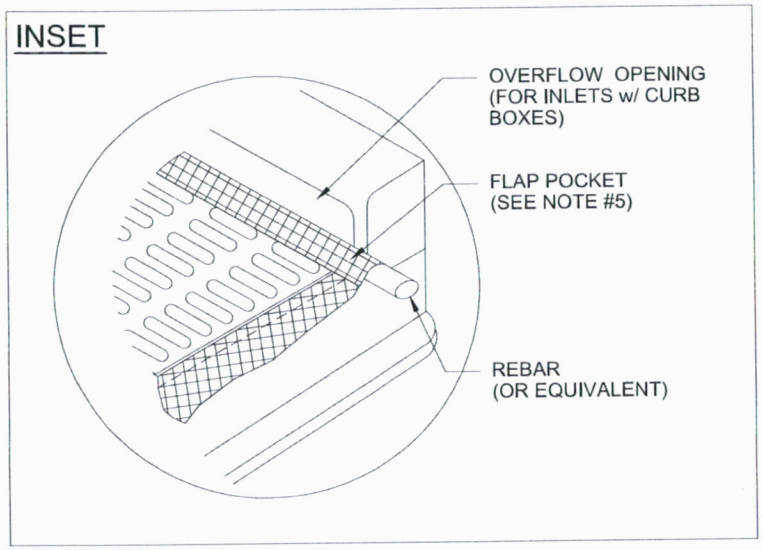

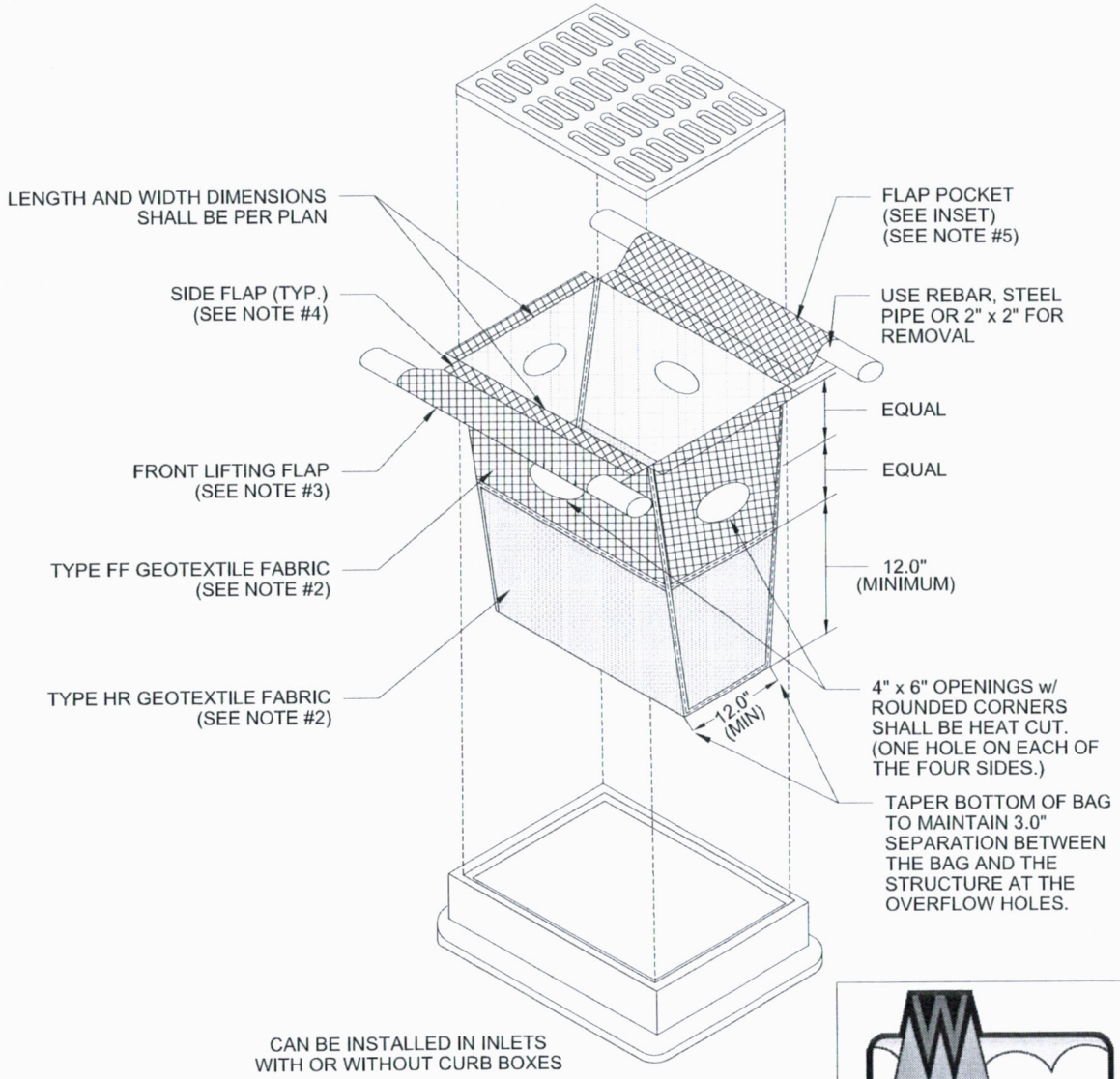

NOTES:

1. TAPER BOTTOM OF BAG TO MAINTAIN THREE INCHES OF CLEARANCE BETWEEN THE BAG AND THE STRUCTURE, MEASURED FROM THE BOTTOM OF THE OVERFLOW OPENINGS TO THE STRUCTURE WALL.
2. GEOTEXTILE FABRIC, TYPE FF FOR FLAPS AND TOP HALF OF FILTER BAG. GEOTEXTILE FABRIC, TYPE HR FOR BOTTOM HALF OF FILTER BAG WITH FRONT, BACK, AND BOTTOM BEING ONE PIECE.
3. FRONT LIFTING FLAP IS TO BE USED WHEN REMOVING AND MAINTAINING FILTER BAG.
4. SIDE FLAPS SHALL BE A MAXIMUM OF TWO INCHES LONG. FOLD THE FABRIC OVER AND REINFORCE WITH MULTIPLE STITCHES.
5. FLAP POCKETS SHALL BE LARGE ENOUGH TO ACCEPT WOOD 2" x 2". THE REBAR, STEEL PIPE, OR WOOD SHALL BE INSTALLED IN THE REAR FLAP AND SHALL NOT BLOCK THE TOP HALF OF THE CURB FACE OPENING.

MAINTENANCE NOTES:

1. WHEN REMOVING OR MAINTAINING INLET PROTECTION, CARE SHALL BE TAKEN SO THAT THE SEDIMENT TRAPPED IN THE FABRIC DOES NOT FALL INTO THE STRUCTURE. MATERIAL THAT HAS FALLEN INTO THE INLET SHALL BE IMMEDIATELY REMOVED.

WISCONSIN DEPT. OF NATURAL RESOURCES

1060	TECHNICAL STANDARD No.
08/2014	REVISION DATE
NOT TO SCALE	

Vegetative Buffer
For Construction Sites
(1054)

Wisconsin Department of Natural Resources
Conservation Practice Standard

I. Definition

An area of *dense vegetation*[1] intended to slow runoff and trap sediment. Vegetative Buffers are commonly referred to as filter or buffer strips.

II. Purpose

The purpose of this practice is to remove sediment in *sheet flow* by velocity reduction.

III. Conditions Where Practice Applies

This practice applies to areas where sediment delivery is in the form of *sheet and rill erosion* from disturbed areas.

IV. Federal, State, and Local Laws

Users of this standard shall be aware of applicable federal, state, and local laws, rules, regulations, or permit requirements governing the use and placement of a vegetative buffer. This standard does not contain the text of federal, state, or local laws.

V. Criteria

This section establishes the minimum standards for design, installation and performance requirements.

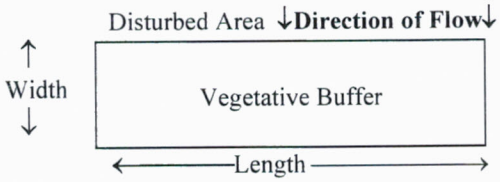

A. The vegetative buffer shall be located along the entire length of the down slope edge of the entire disturbed area for which the practice is being applied.

B. The vegetative buffer shall be located on the contour.

C. The width of the vegetative buffer shall have slopes less than 5 %.

D. The disturbed area draining to the vegetative buffer shall have slopes of 6 % or less.

E. The vegetative buffer shall have a minimum *width* of 25 feet. 25 feet is adequate for disturbed areas up to 125 feet upslope from the vegetative buffer. An additional one foot of width shall be added to the buffer for every 5 feet exceeding 125 feet upslope of the disturbed area draining to the vegetative buffer.

F. To minimize compaction and destruction of the vegetative cover, designate the vegetative buffer as an area of no disturbance. Construction equipment shall be excluded from the designated area. Vegetative buffers shall be clearly shown on plans and marked in the field.

G. Vegetative buffers shall be densely vegetated prior to upslope soil disturbance.

VI. Considerations

A. Maintaining sheet flow is critical to the function of a vegetative buffer. In some conditions, a *level spreader* may need to be constructed at the upslope side of the vegetative buffer to minimize concentrated flow.

B. Vegetative buffers may require large land areas compared to other erosion control practices.

[1] Words in the standard that are shown in italics are described in IX. Definitions. The words are italicized the first time they are used in the text.

C. Trees should not be cut down to establish a vegetative buffer. Other erosion control measures are preferred.

VII. Plans and Specifications

A. Plans and specifications for vegetative buffers shall be in keeping with this standard and shall describe the requirements for applying the practice to achieve its intended purpose. The plans and specifications shall address the following:

1. Location of vegetative buffer.
2. Limits and slopes of disturbed area and any additional contributory drainage area.
3. Dimensions and slope of vegetative buffer.

B. All plans, standard detail drawings, or specifications shall include schedule for installation, inspection, and maintenance. The responsible party shall be identified.

VIII. Operation and Maintenance

A. Vegetative buffers shall be inspected for proper distribution of flows, sediment accumulation and signs of rill formation. Vegetative buffers shall at a minimum be inspected weekly and within 24 hours after every precipitation event that produces 0.5 inches of rain or more during a 24-hour period.

B. If the vegetative buffer becomes silt covered, contains rills, or is otherwise rendered ineffective, other perimeter sediment control measures shall be installed. Eroded areas shall be repaired and stabilized. Repair shall be completed as soon as possible with consideration to site conditions.

C. A stand of dense vegetation shall be maintained to a height of 3 – 12 inches.

D. Prior to land disturbance the perimeter of vegetative buffers shall be flagged or fenced to prevent equipment from creating ruts, compacting the soil and to prevent damage to vegetation.

IX. Definitions

Dense vegetation (I): is defined as an existing stand of 3 – 12 inch high grassy vegetation that uniformly covers at least 90 % of a representative 1 square yard plot. Woody vegetation shall not be counted for the 90% coverage. No more than 10% of the overall buffer can be comprised of woody vegetation.

Level Spreader (VI.A): Level spreaders disperse flows over a wide area, dissipating the energy of the runoff and creating sheet flow. Common types of level spreaders are weirs and stone trenches.

Sheetflow (II): Sheet flow is over plane surfaces, where runoff water flows in a thin uniform sheet across the land before it collects in a concentrated flow.

Sheet and Rill Erosion (III): Sheet and rill erosion is the removal of soil by the action of rainfall and shallow overland runoff. It is the first stage in water erosion. As flow becomes more concentrated rills occur. As soil detachment continues or flow increases, rills will become wider and deeper.

Width (V.E): Is measured in the direction of flow.

Silt Fence
(1056)

Wisconsin Department of Natural Resources
Conservation Practice Standard

I. Definition

Silt fence is a temporary sediment barrier of entrenched permeable geotextile fabric designed to intercept and slow the flow of sediment-laden sheet flow runoff from small areas of disturbed soil.

II. Purpose

The purpose of this practice is to reduce slope length of the disturbed area and to intercept and retain transported sediment from disturbed areas.

III. Conditions Where Practice Applies

A. This standard applies to the following applications:

1. Erosion occurs in the form of *sheet and rill erosion*[1]. There is no concentration of water flowing to the barrier (*channel erosion*).

2. Where adjacent areas need protection from sediment-laden runoff.

3. Where effectiveness is required for one year or less.

4. Where conditions allow for silt fence to be properly entrenched and staked as outlined in the Criteria Section V.

B. Under no circumstance shall silt fence be used in the following applications:

1. Below the ordinary high watermark or placed perpendicular to flow in streams, swales, ditches or any place where flow is concentrated.

2. Where the maximum gradient upslope of the fence is greater than 50% (2:1).

IV. Federal, State, and Local Laws

Users of this standard shall be aware of applicable federal, state, and local laws, rules, regulations, or permit requirements governing the use and placement of silt fence. This standard does not contain the text of federal, state, or local laws.

V. Criteria

This section establishes the minimum standards for design, installation and performance requirements.

A. Placement

1. When installed as a stand-alone practice on a slope, silt fence shall be placed on the contour. The parallel spacing shall not exceed the maximum slope lengths for the appropriate slope as specified in Table 1.

Table 1.

Slope	Fence Spacing
< 2%	100 feet
2 to 5%	75 feet
5 to 10%	50 feet
10 to 33%	25 feet
> 33%	20 feet

2. Silt fences shall not be placed perpendicular to the contour.

3. The ends of the fence shall be extended upslope to prevent water from flowing around the ends of the fence.

B. Height – Installed silt fences shall be a minimum 14 inches high and shall not exceed 28 inches in height measured from the installed ground elevation.

[1] Words in the standard that are shown in italics are described in X. Definitions. The words are italicized the first time they are used in the text.

C. **Support** – Silt fences shall be supported by either steel or wood supports as specified below:

1. Wood supports

   a. The full height of the silt fence shall be supported by 1 1/8 inches by 1 1/8 inches air or kiln dried posts of hickory or oak.

   b. The silt fence fabric shall be stapled, using at least 0.5-inch staples, to the upslope side of the posts in at least 3 places.

   c. The posts shall be a minimum of 3 feet long for 24-inch silt fence and a minimum of 4 feet for 36-inch silt fence fabric.

2. Steel supports

   a. The full height of the silt fence shall be supported by steel posts at least 5 feet long with a strength of 1.33 pounds per foot and have projections for the attachment of fasteners.

   b. The silt fence fabric shall be attached in at least three places on the upslope side with 50 pound plastic tie straps or wire fasteners. To prevent damage to the fabric from fastener, the protruding ends shall be pointed away from the fabric.

3. The maximum spacing of posts for non-woven silt fence shall be 3 feet and for woven fabric 8 feet.

4. Silt fence shall have a support cord.

5. Where joints are necessary, each end of the fabric shall be securely fastened to a post. The posts shall then be wrapped around each other to produce a stable, secure joint or shall be overlapped the distance between two posts.

6. A minimum of 20 inches of the post shall extend into the ground after installation.

D. **Anchoring** – Silt fence shall be anchored by spreading at least 8 inches of the fabric in a 4 inch wide by 6 inch deep trench, or 6 inch deep V-trench on the upslope side of the fence. The trench shall be backfilled and compacted. Trenches shall not be excavated wider and deeper than necessary for proper installation.

On the terminal ends of silt fence the fabric shall be wrapped around the post such that the staples are not visible.

E. **Geotextile Fabric Specifications** – The geotextile fabric consists of either woven or non-woven polyester, polypropylene, stabilized nylon, polyethylene, or polyvinylidene chloride. Non-woven fabric may be needle punched, heat bonded, resin bonded, or combinations thereof. All fabric shall meet the following requirements as specified in Table 2.

Table 2.

Test Requirement	Method	Value[1]
Minimum grab tensile strength in the machine direction	ASTM D 4632	120 lbs. (550 N)
Minimum grab tensile strength in the cross machine direction	ASTM D 4632	100 lbs. (450 N)
Maximum apparent opening size equivalent standard sieve	ASTM D 4751	No. 30 (600 μm)
Minimum permittivity	ASTM D 4491	0.05 scc^{-1}
Minimum ultraviolet stability percent of strength retained after 500 hours of exposure	ASTM D 4355	70%

(WisDOT Standard Specifications for Road and Bridge Construction, 2001)

[1] All numerical values represent minimum / maximum average roll values. (For example, the average minimum test results on any roll in a lot should meet or exceed the minimum specified values.)

Silt fence shall have a maximum flow rate of 10-gallons/minute/square foot at 50mm constant head as determined by multiplying permittivity in 1/second as determined by ASTM D-4491 by a conversion factor of 74.

F. **Removal** – Silt fences shall be removed once the disturbed area is permanently stabilized and no longer susceptible to erosion.

VI. Considerations

A. Improper placement as well as improper installation and maintenance of silt fences will significantly decrease the effectiveness of this practice.

Silt fences should be considered for trapping sediment where sheet and rill erosion may be expected to occur in small drainage areas. Silt fences should not be placed in areas of concentrated flow.

B. Silt fences should be installed prior to disturbing the upslope area.

C. Silt fences should not be used to define the boundaries of the entire project. Silt fence should be placed only in areas where it is applicable due to its cost and the fact that it is not biodegradable. For example, silt fence should not be placed in locations where the natural overland flow is from an undisturbed area into disturbed areas of the project. It should also not be used as a diversion.

D. Silt fence should not be used in areas where the silt fence is at a higher elevation than the disturbed area.

E. When placing silt fence near trees, care should be taken to minimize damage to the root system. Avoid compaction and root cutting within 1.5 feet multiplied by the inch diameter of the tree (for example: for 10-inch trees keep out a 15-foot radius from the trunk). Refer to UWEX publication Preserving Trees During Construction for more information.

F. To protect silt fence from damage in areas of active construction or heavy traffic, silt fence should be flagged, marked, or highlighted to improve visibility.

G. Silt fence effectiveness is generally increased when used in conjunction with other upslope erosion control practices. To further strengthen the silt fence, straw / hay bales can be placed on the down slope side.

H. To help ensure effectiveness, silt fence should be inspected and repaired as necessary prior to forecasted rain events.

I. Where installation with wood posts is difficult, such as when hard or frozen ground is encountered, the use of steel post is recommended.

J. Silt fence can be mechanically installed with a plow type device provided that the silt fence is trenched in a manner such that equivalent performance is achieved to that specified in Section V.D.

VII. Plans and Specifications

A. Plans and specifications for installing silt fence shall be in keeping with this standard and shall describe the requirements for applying the practice to achieve its intended purpose. The plans and specifications shall address the following:

1. Location of silt fence
2. Contributory drainage area
3. Schedules
4. Material specification conforming to standard
5. Standard drawings and installation details
6. Restoration after removal

B. All plans, standard detail drawings, or specifications shall include schedule for installation, inspection, and maintenance. The responsible party shall be identified.

VIII. Operation and Maintenance

A. Silt fences shall at a minimum be inspected weekly and within 24 hours after every precipitation event that produces 0.5 inches of rain or more during a 24 hour period.

B. Damaged or decomposed fences, undercutting, or flow channels around the end of barriers shall be repaired or corrected.

C. Sediment shall be properly disposed of once the deposits reach ½ the height of the fence.

IX. References

UWEX Publication A0327 "Preserving Trees During Construction"

X. Definitions

Channel Erosion (III.A.1): The deepening and widening of a channel due to soil loss caused by flowing water. As rills become larger and flows begin to concentrate, soil detachment occurs primarily as a result of shear.

Sheet and Rill Erosion (III.A.1): Sheet and rill erosion is the removal of soil by the action of rainfall and shallow overland runoff. It is the first stage in water erosion. As flow becomes more concentrated rills occur. As soil detachment continues or flow increases, rills will become wider and deeper forming gullies.

GENERAL NOTES

① TRENCH SHALL BE A MINIMUM OF 4" WIDE & 6" DEEP TO BURY AND ANCHOR THE GEOTEXTILE FABRIC. FOLD MATERIAL TO FIT TRENCH AND BACKFILL & COMPACT TRENCH WITH EXCAVATED SOIL.

② WOOD POSTS SHALL BE A MINIMUM SIZE OF 1 1/8" X 1 1/8" OF OAK OR HICKORY.

③ CONSTRUCT SILT FENCE FROM A CONTINUOUS ROLL IF POSSIBLE BY CUTTING LENGTHS TO AVOID JOINTS. IF A JOINT IS NECESSARY USE ONE OF THE FOLLOWING TWO METHODS: A) TWIST METHOD -- OVERLAP THE END POSTS AND TWIST, OR ROTATE, AT LEAST 180 DEGREES. B) HOOK METHOD -- HOOK THE END OF EACH SILT FENCE LENGTH.

NOTE: ADDITIONAL POST DEPTH OR TIE BACKS MAY BE REQUIRED IN UNSTABLE SOILS

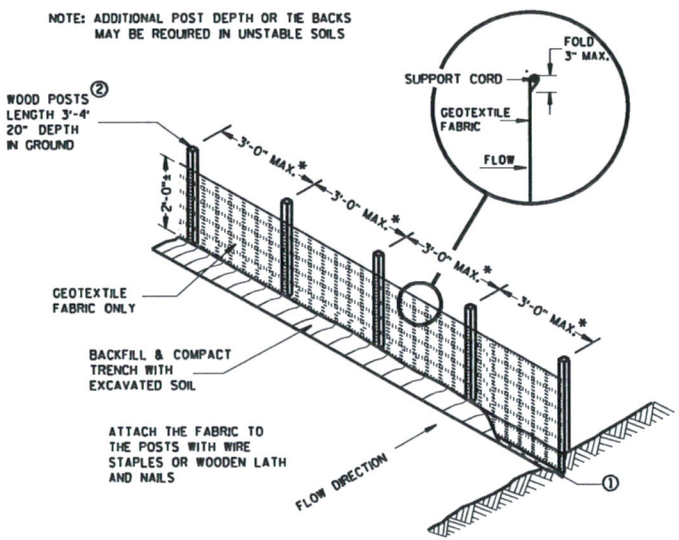

*NOTE: 8'-0" POST SPACING ALLOWED IF A WOVEN GEOTEXTILE FABRIC IS USED.

SILT FENCE

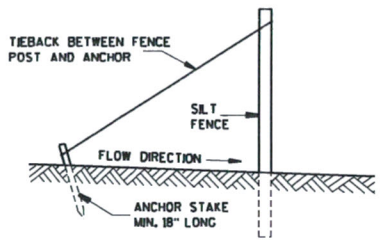

SILT FENCE TIE BACK
(WHEN ADDITIONAL SUPPORT REQUIRED)

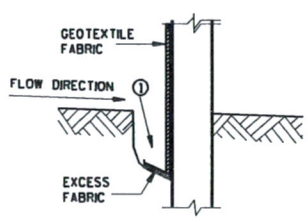

TRENCH DETAIL

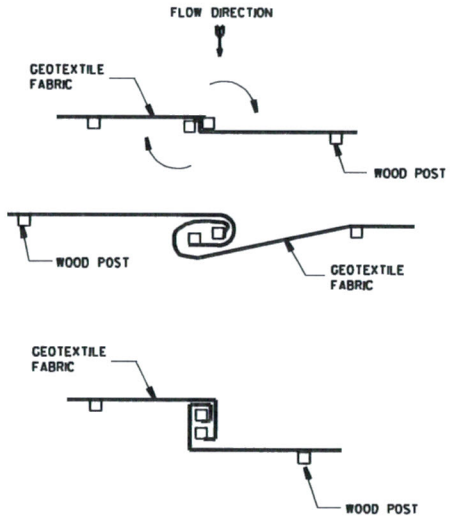

TWIST METHOD

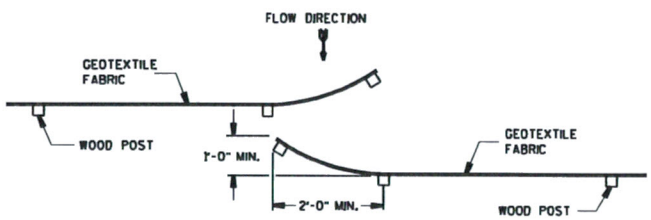

HOOK METHOD

JOINING TWO LENGTHS OF SILT FENCE ④

This drawing based on Wisconsin Department of Transportation Standard Detail Drawing 8 E 9-6.

SILT FENCE

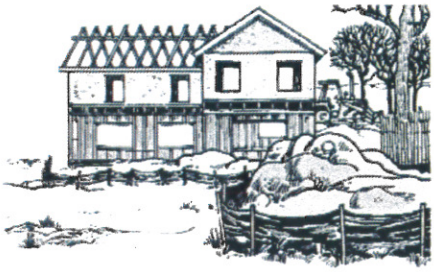

Erosion Control for Home Builders

By controlling erosion, home builders help keep our lakes and streams clean.

Eroding construction sites are a leading cause of water quality problems in Wisconsin. For every acre under construction, about a dump truck and a half of soil washes into a nearby lake or stream unless the builder uses erosion controls. Problems caused by this sediment include:

Taxes
Cleaning up sediment in streets, sewers and ditches adds extra costs to local government budgets.

Lower property values
Neighboring property values are damaged when a lake or stream fills with sediment. Shallow areas encourage weed growth and create boating hazards.

Poor fishing
Muddy water drives away fish like northern pike that rely on sight to feed. As it settles, sediment smothers gravel beds where fish like smallmouth bass find food and lay their eggs. Soil particles in suspension can act like a sand blaster during a storm and damage fish gills.

Nuisance growth of weeds and algae
Sediment carries fertilizers that fuel algae and weed growth.

Dredging
The expense of dredging sediment from lakes, harbors and navigation channels is paid for by taxpayers.

This fact sheet includes the diagrams and step-by-step instructions needed by builders on most home sites. Additional controls may be needed for sites that have steep slopes, are adjacent to lakes and streams, receive a lot of runoff from adjacent land, or are larger than an acre.

If you need help developing an erosion control plan or training your staff, contact your local building inspection, zoning or erosion control office.

Controlling Erosion is Easy

Erosion control is important even for home sites of an acre or less. The materials needed are easy to find and relatively inexpensive – straw bales or silt fence, stakes, gravel, plastic tubes, and grass seed. Putting these materials to use is a straightforward process. Only a few controls are needed on most sites:

- Preserving existing trees and grass where possible to prevent erosion;
- Revegetating the site as soon as possible;
- Silt fence or straw bales to trap sediment on the downslope sides of the lot;
- Placing soil piles away from any roads or waterways;
- Diversions on upslope side and around stockpilkes;
- Stone/rock access drive used by all vehicles to limit tracking of mud onto streets;
- Cleanup of sediment carried off-site by vehicles or storms; and
- Downspout extenders to prevent erosion from roof runoff.

GWQ001 Erosion Control for Home Builders. Additional copies are available from Cooperative Extension Publications, 45 N. Charter St., Madison, WI 53715, 608/262-3346 (toll-free 877-947-7827) or Dept. of Commerce, P.O. Box 2509, Madison, WI 53701-2509, 608/267-4405.

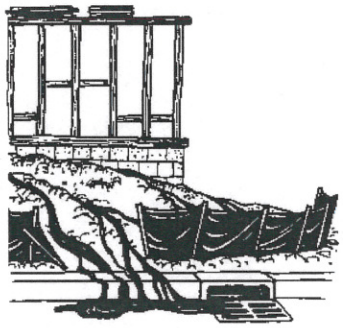

A poorly installed silt fence will not prevent soil erosion. Fabric must be buried in a trench and sections must overlap (see diagram on back of this fact sheet).

WARNING! Extra measures may be needed if your site:

- is within 300 feet of a stream or wetland;
- is within 1000 feet of a lake;
- is steep (slopes of 12% or more);
- receives runoff from 10,000 sq. ft. or more of adjacent land;
- has more than an acre of disturbed ground.

For information on appropriate measures for these sites, contact your local building inspection, zoning or erosion control office.

Straw Bale or Silt Fence

- Install within 24 hours of land disturbance.
- Install on downslope sides of site parallel to contour of the land.
- Extended ends upslope enough to allow water to pond behind fence.
- Bury eight inches of fabric in trench (see back page).
- Stake (two stakes per bale).
- Leave no gaps. Stuff straw between bales, overlap sections of silt fence, or twist ends of silt fence together.
- Inspect and repair once a week and after every ½-inch rain. Remove sediment if deposits reach half the fence height. Replace bales after three months.
- Maintain until a lawn is established.

Soil Piles

- Cover with plastic and locate away from any downslope street, driveway, stream, lake, wetland, ditch or drainageway.
- Temporary seed such as annual rye or winter wheat is recommended for topsoil piles.

Access Drive

- Install an access drive using two-to-three-inch aggregate prior to placing the first floor decking on foundation.
- Lay stone six inches deep and at least seven feet wide from the foundation to the street (or 50 feet if less).
- Use to prevent tracking mud onto the road by all vehicles.
- Maintain throughout construction.
- In clay soils, use of geotextile under the stone is recommended.

Sediment Cleanup

- By the end of each work day, sweep or scrape up soil tracked onto the road.
- By the end of the next work day after a storm, clean up soil washed off-site.

Sewer Inlet Protection

- Protect on-site storm sewer inlets with straw bales, silt fences or equivalent measures.
- Inspect, repair and remove sediment deposits after every storm.

Downspout Extenders

- Not required, but highly recommended.
- Install as soon as gutters and downspouts are completed to prevent erosion from roof runoff.
- Use plastic drainage pipe to route water to a grassed or paved area. Once a lawn is established, direct runoff to the lawn or other pervious areas.
- Maintain until a lawn is established.

Preserving Existing Vegetation

- Wherever possible, preserve existing trees, shrubs, and other vegetation.
- To prevent root damage, do not grade, place soil piles, or park vehicles near trees marked for preservation.
- Place plastic mesh or snow fence barriers around trees to protect the root area below their branches.

Revegetation

- Seed, sod or mulch bare soil as soon as possible. Vegetation is the most effective way to control erosion.

Seeding and Mulching

- Spread four to six inches of topsoil.
- Fertilize and lime if needed according to soil test (or apply 10 lb./1000 sq. ft. of 10-10-10 fertilizer).
- Seed with an appropriate mix for the site (see table).
- Rake lightly to cover seed with 1/4" of soil. Roll lightly.
- Mulch with straw (70-90 lb. or one bale per 1000 sq. ft.).
- Anchor mulch by punching into the soil, watering, or by using netting or other measures on steep slopes.
- Water gently every day or two to keep soil moist. Less watering is needed once grass is two inches tall.

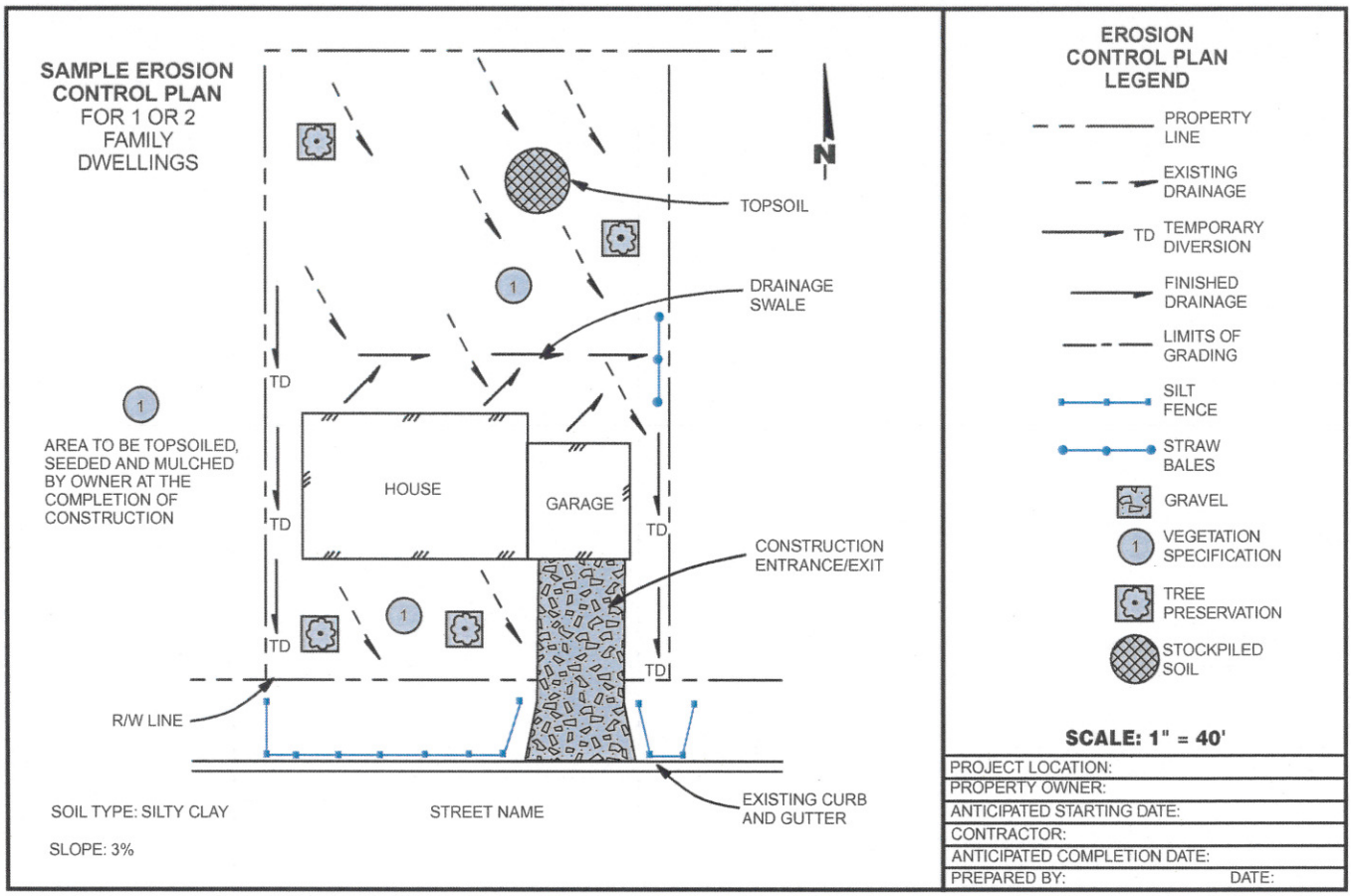

Sodding

- Spread four to six inches of topsoil.
- Fertilize and lime if needed according to soil test (or apply 10 lb./1000 sq. ft. of 10-10-10 fertilizer).
- Lightly water the soil.
- Lay sod. Tamp or roll lightly.
- On slopes, lay sod starting at the bottom and work toward the top. Laying in a brickwork pattern. Peg each piece down in several places.
- Initial watering should wet soil six inches deep (or until water stands one inch deep in a straight-sided container). Then water lightly every day or two to keep soil moist but not saturated for two weeks.
- Generally, the best times to sod and seed are early fall (Aug. 15-Sept. 15) or spring (May). If construction is completed after September 15, final seeding should be delayed. Sod may be laid until November 1. Temporary seed (such as rye or winter wheat) may be planted until October 15. Mulch or matting may be applied after October 15, if weather permits. Straw bale or silt fences must be maintained until final seeding or sodding is completed in spring (by June 1).

Concrete Wash Water

- Dispose of concrete wash water in an area of soil away from surface waters where soil can act as a filter or evaporate the water. Dispose of remaining cement. Be aware that this water can kill vegetation.

De-Watering

- Dispose of de-watering water in a pervious area. Prevent the discharge of sediment from de-watering operations into storm sewers and surface waters.

Material Storage

- Manage chemicals, materials and other compounds to avoid contamination of runoff.

Typical Lawn Seed Mixtures

	Percent by Weight	
Grass	**Sunny Site**	**Shady Site**
Kentucky bluegrass	65%	15%
Fine fescue	20%	70%
Perennial ryegrass	15%	15%
Seeding rate (lb./1000 sq. ft.)	3-4	4-5

Source: R.C. Newman, Lawn Establishment, UW-Extension, 1988.

COMMONLY USED EROSION CONTROLS

Straw Bale Fences

Cross Section of Straw Bale Installation

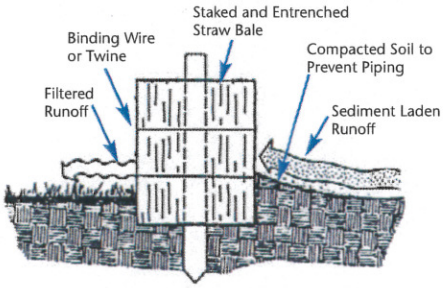

Source: Michigan Soil Erosion and Sedimentation Control Guidebook, 1975.

How to Install a Straw Bale Fence

1. Excavate a 4" deep trench.

2. Place bales in trench with bindings around sides away from the ground. Leave no gaps between bales.

3. Anchor bales using two steel rebars or 2" x 2" wood stakes per bale. Drive stakes into the ground at least 8".

4. Backfill and compact the excavated soil.

Silt Fences

Cross Sections of Trenches for Silt Fences

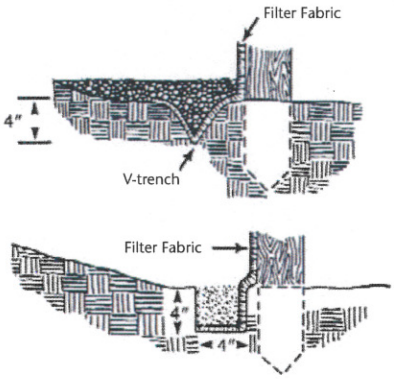

Sources: North Carolina Erosion and Sediment Control Planning and Design Manual, 1988.

How to Install a Silt Fence

1. Excavate a 4" x 4" trench along the contour.

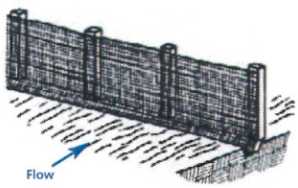

2. Stake the silt fence on downslope side of trench. Extended 8" of fabric into the trench.

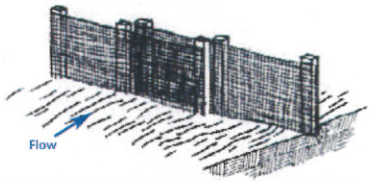

3. When joints are necessary, overlap ends for the distance between two stakes.

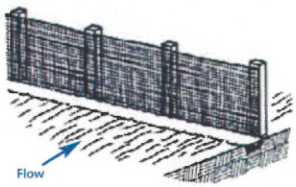

4. Backfill and compact the excavated soil.

Access Drive

How to Install an Access Drive

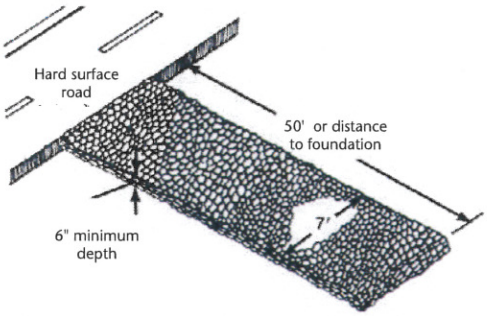

1. Install as soon as possible after start of grading.
2. Use two-to-three-inch aggregate stone.
3. Drive must be at least seven feet wide and 50 feet long or the distance to the foundation, whichever is less.
4. Replace as needed to maintain six-inch depth.

This publication is available from county UW-Extension offices or from Extension Publications, 630 W. Mifflin St., Madison, WI 53703. (608) 262-3346.

A publication of the University of Wisconsin–Extension in cooperation with the Wisconsin Department of Natural Resources.

Author: Carolyn Johnson, UW–Extension.

©1999 by the Board of Regents of the University of Wisconsin System. Send inquiries about copyright permission to: Cooperative Extension Publications, 432 N. Lake St., Madison, WI 53706. University of Wisconsin-Extension is an EEO/Affirmative Action employer and provides equal opportunities in employment and programming, including Title IX and ADA requirements.

Printed on recycled paper

GWQ001 Erosion Control for Home Builders

DNR WT-457-96

R-1-00-10M-25-S

Editing and design by the Environmental Resources Center, University of Wisconsin–Extension.

SITE PLAN

ADDRESS _____

PARCEL NO. _____

SUBDIVISION _____

LOT NO. _____

NAME OF SEWER & WATER INSTALLATION CONTRACTOR:

_____

MUST BE LICENSED, INSURED & BONDED

☒ LOT SIZE AND DIMENSIONS

☒ BUILDING(S) LOCATION
- ☒ SIZE
- ☒ NUMBER OF STORIES
- ☒ USE
- ☒ SETBACKS FROM PROPERTY LINES

☒ DRIVEWAY LOCATION
- ☒ WIDTH AT PROPERTY LINE (12' OR 10' MAX. PER GARAGE STALL)
- ☒ SETBACK FROM PROPERTY LINE
- ☒ CURB CUT (WIDTH PLUS 5')
- ☐ CULVERT LENGTH (WIDTH PLUS 10')

☒ UTILITY EASEMENT

☐ FLOOD PLAIN

☐ WETLAND OR WATERWAY

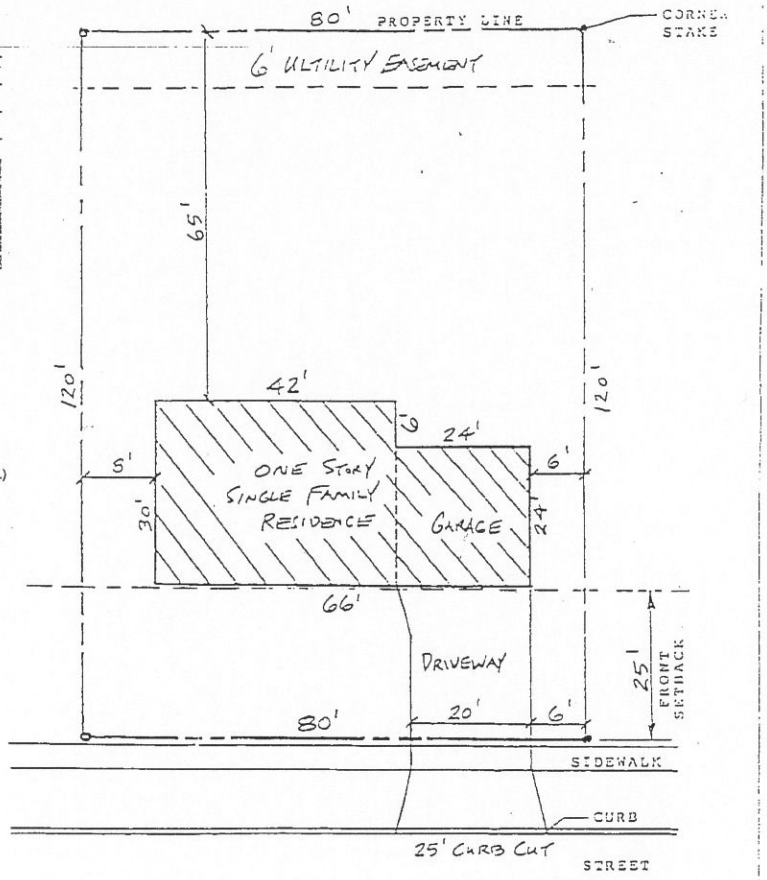

EROSION CONTROL PLAN

NOTES:

1. EXCESS SOIL NOT USED FOR BACKFILLING OR FINAL GRADING TO BE REMOVED FROM SITE DURING EXCAVATION.
2. FOUNDATION TO BE BACKFILLED WITHIN 10 DAYS AFTER COMPLETION OF FOUNDATION.

(1) - AREA TO BE TOPSOILED, SEEDED WITH KENTUCKY BLUEGRASS AND MULCHED BY OWNER AT THE COMPLETION OF CONSTRUCTION.

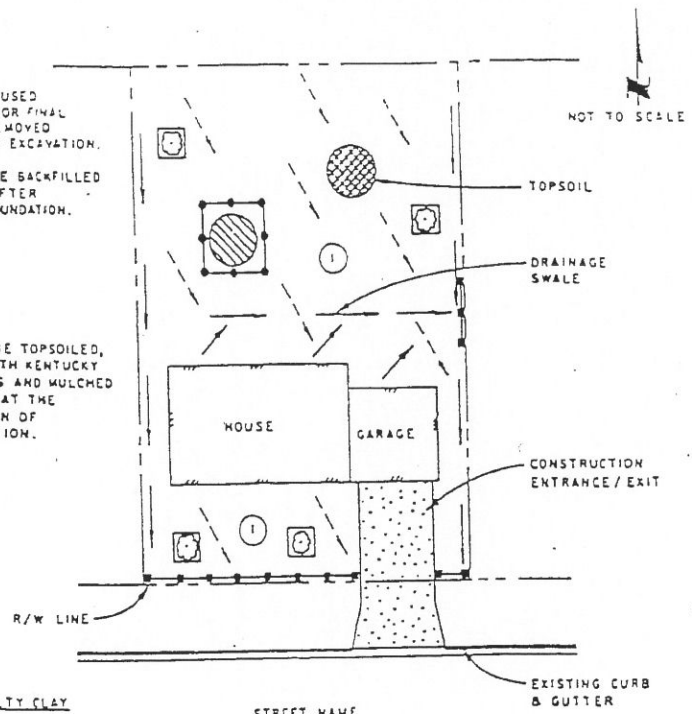

SOIL TYPE: SILTY CLAY

SLOPE: 3 %

EROSION CONTROL PLAN LEGEND

- PROPERTY LINE
- EXISTING DRAINAGE
- TD TEMPORARY DIVERSION
- FINISHED DRAINAGE
- LIMITS OF GRADING
- SILT FENCE
- STRAW BALES
- GRAVEL
- VEGETATION SPECIFICATION AREA # 1
- TREE PRESERVATION
- STOCKPILED SOIL
- STOCKPILED SOIL WITH COVER
- RIPRAP
- SOD CHANNEL

PROJECT LOCATION:	
PROPERTY OWNER:	
CONTRACTOR:	
ANTICIPATED STARTING DATE:	
ANTICIPATED COMPLETION DATE:	
PREPARED BY: CEW	DATE 8-1-90

SITE PLAN

Address:_____
Parcel No:_____
Subdivision:_____
Lot No.:_____

Name of Sewer & Water Installation Contractor:

Must Be Licensed, Insured & Bonded

- ☐ Lot Size and Dimensions
- ☐ Building(s) Location
  - ☐ Size
  - ☐ Number of Stories
  - ☐ Use
  - ☐ Setbacks From Property Lines
- ☐ Driveway Location
  - ☐ Width at Property Line (12' or 10' Max. Per Garage Stall)
  - ☐ Setback From Property Line
  - ☐ Curb Cut (Width Plus 5')
  - ☐ Culvert Length (Width plus 10')
- ☐ Utility Easement
- ☐ Flood Plain
- ☐ Wetland or Waterway

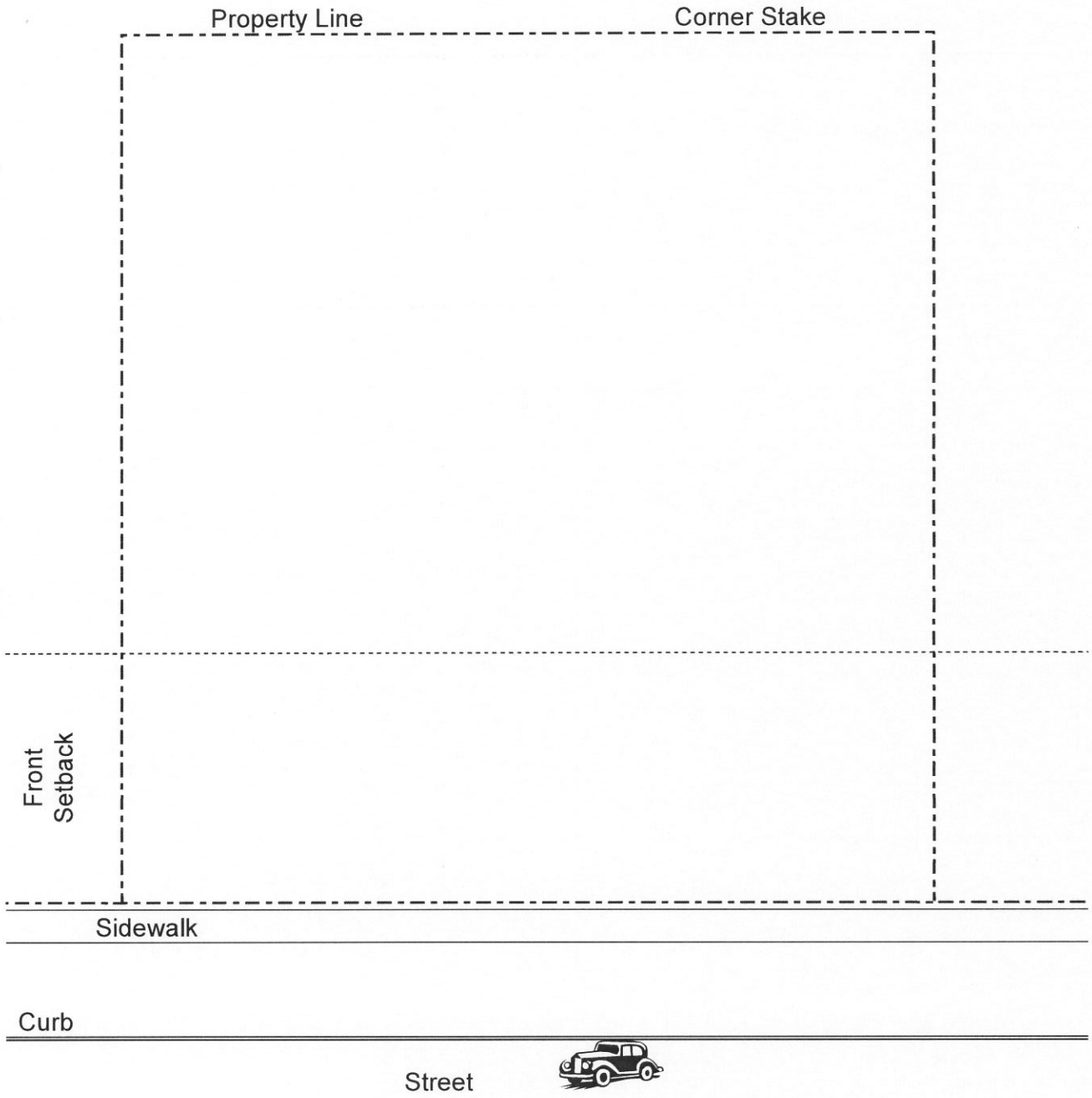

EROSION CONTROL PLAN LEGEND

- Property Line
- Existing Drainage
- Temporary Diversion (TD)
- Finished Drainage
- Limits of Grading
- Silt Fence
- Straw Bales
- Gravel
- Vegetation Specification Area #1
- Tree Preservation
- Stockpiled Soil
- Stockpiled Soil w/cover
- Rip Rap
- Sod Channel

Property Location:	
Property Owner:	
Contractor:	
Anticipated Starting Date:	
Anticipated Completion Date:	
Prepared By:	Date:

www.greenbaywi.gov

LICENSED CONTRACTOR PLUMBING PERMIT

COMMUNITY SERVICES AGENCY
Inspection Division
100 N. Jefferson St., Rm. 608
Green Bay, WI 54301
(920) 448-3300 - phone
(920) 448-3117 – fax
inspmail@greenbaywi.gov

Address: _____

Owner: _____ Value of Work: $_____

Name of Plumbing Contractor: _____Phone #_____

Plumbing Contractor Email:_____

This section for City use only
Project #: _____
Permit Fee: _____
Parcel #: _____
Receipt #: _____
Date: _____

I hereby make application for a permit for the following described sewer/plumbing work at the above location.

Signed:_____ Master Plumber Credential #_____

FIXTURES ROUGHED IN FOR AND/OR INSTALLED (please circle and indicate the number of fixtures)

Sinks	Hot water tanks	Soda fountains
Dishwashers	Water softeners	Bar connections
Garbage grinders	Water filters	Refrigerators
Disposals	Floor drains	Ice cube machines
Water Closets	Roof drains	Dental cuspidors
Wash basins	Drain tile receivers	Ice boxes
Bath tubs	Catch basin	Acid tanks
Shower stalls	Yard drains	Oil separators
Urinals	Grease trap (requires plan approval)	Connections to machines
Laundry tubs	Sumps	Connections to appliances
Bubblers	Pumps	Fire protection installations
Water Heaters	Ejectors	
Palmer Valve	RP Valves	**TOTAL FIXTURES**

Excerpt from City of Green Bay Plumbing Code:

Section 16.06 Permit must be procured before starting work: If any work regulated by the Plumbing Ordinance for which a permit is required is commenced without a permit first having been obtained thereof, double the permit fee herein prescribed shall be paid when a permit finally is obtained. Payment of any fee mentioned in this Section, however, shall in no way relieve any person of the penalties that may be imposed for violation of the Plumbing Ordinance.

24-hours notice of inspection is required.

☐ Check box for Online Payment

The information below shall be provided for notification of project number and permit fee. This information is required to make payment online.

☐ Phone_____ ☐ Fax_____ ☐ Email_____

City of Green Bay
100 N. Jefferson St., Room 608
Green Bay, Wisconsin 54301-5026

Small-Site Erosion Control Application

General Instructions: Submit this application and erosion control plan demonstrating reasonable compliance with Ch. 34, Green Bay Municipal Ordinance and/or Ch. DSPS 20.09(5), Uniform Dwelling Code, for sites covering less than one acre and/or one- or two-family residential construction prior to commencing land-disturbing construction or land-development activity.

Address of land-disturbing activity:	Parcel #:	Zoning Dist.:	Plan Review #:

APPLICANT ☐ Check if Property Owner	EROSION CONTROL CONTRACTOR ☐ Check if Applicant
Name	Name
Company	Company
Address	Address
City, State, ZIP	City, State, ZIP
Phone	Phone
Email	Email

Description of Activity:
☐ Fill Site ☐ Excavation Site ☐ Construction Site_____ Acres - _____ Start_____ End - _____

Erosion Control Plan: (provide 3 copies of the following plans)

1. Existing Site Plan - The required plan shall be legible and drawn to scale or dimensioned and shall include the following:
   a. Indicate site boundaries, existing buildings and other buildings, wells, surface waters and disposal systems on the site with respect to property lines;
   b. Indicate the direction of all slopes on the site and areas immediately adjacent to the site;
   c. Designate the proposed area of land-disturbing construction or land-development activity; and
   d. Designate and label appropriate slope categories: (a) less than 12% slope, (b) 12% to 20% slope, (c) greater than 20% slope, within the proposed area of land-disturbing construction or land-development activity;
2. Final Site Plan - A plan of final site conditions at the same scale as the existing site map locating proposed dwelling, attached or detached garage, accessory yard buildings, driveways, exterior parking spaces, and all proposed site development.
3. Construction Site Erosion Control Plan - A plan at the same scale as the existing site map and includes the following:
   a. Identify those measures which will be utilized to address perimeter site erosion, slope stabilization, sediment tracking from the construction site, off-site sediment cleanup, protection of on-site public sewer inlets, and proper disposal of waste building material;
   b. Utilization of appropriate measures or as specified in DSPS21.125(2);
   c. Maintenance of erosion control measures installed erosion control measures during periods of inclement weather and at regular intervals.

Signature:

Applicant _____ Date_____

Permit Issuance: (Completed by City of Green Bay)

1. Duration – This erosion control permit shall remain valid for a period of 180 days or for the length of the building permit, whichever is longer. The Planning Director or designated representative may extend the period one or more times for up to an additional 180 days, and may require additional erosion control measures as a condition of the extension if necessary to meet the requirements of this ordinance.

   Permit Expiration Date _____

2. Surety Bond - As a condition of approval and issuance of the permit, the Building Inspection Superintendent may require the applicant to deposit a surety bond or irrevocable letter of credit to guarantee a good faith execution of the approved erosion control plan and any permit conditions.

   Surety Bond Amount $_____ Date Filed _____

3. Conditions of Approval - This permit approval requires the applicant to:
   a. Notify the Planning Director or designated representative within 48 hours of commencing any land-disturbing construction or land-development activity.
   b. Notify the Planning Director or designated representative of completion of any erosion control measures within seven days after their installation.
   c. Obtain permission in writing from the Planning Director or designated representative prior to modifying the erosion control plan.
   d. Install all erosion control measures as identified in approved erosion control plan.
   e. Maintain all road drainage systems, storm water drainage systems, control measures, and other facilities identified in erosion control plan.
   f. Repair any siltation or erosion damage to adjoining surfaces and roadways resulting from land-developing construction or land-disturbing activities.
   g. Inspect the construction erosion control measures after each rain of 0.5" or more and at least once each week and make needed repairs.
   h. Allow the Planning Director or designated representative to enter the site for the purpose of inspecting compliance with the erosion control plan or for performing any work necessary to bring the site into compliance with the erosion control plan.
   i. Keep a copy of the approved erosion control plan on the site.

Plan Reviewer_____ Date _____

1 Copy for Inspection 1 Copy for Applicant

www.greenbaywi.gov

LICENSED CONTRACTOR HEATING PERMIT

COMMUNITY SERVICES AGENCY
Inspection Division
100 N. Jefferson St., Rm. 608
Green Bay, WI 54301
(920) 448-3300 - phone
(920) 448-3117 – fax
inspmail@greenbaywi.gov

This section for City use only
Project #: _____
Permit Fee: _____
Parcel #: _____
Receipt #: _____
Date: _____

Project Address: _____

Owner: _____

Heating Contractor: _____

Contractor's Email: _____

Contractor's Phone #: _____ Unit Price: _____ Value of Work: _____

Check all that's applicable:

☐ **FURNACE**: Gas _____ Electric _____Oil _____ Forced Air _____

☐ **AIR CONDITIONER**: Forced Air _____ Central Air _____

☐ **BOILER**: Steam _____ Hot Water _____ Res _____ Industrial _____ Commercial _____

☐ **SPACE HEATER**: Type _____ Unit _____ Class _____

I hereby make application for a permit for the following described heating work at the above location.

Contractor's Signature: _____Credential # _____

☐ Check box for Online Payment
The information below shall be provided for notification of project number and permit fee. This information is required to make payment online.

☐ Phone_____ ☐ Fax_____ ☐ Email_____

www.greenbaywi.gov

LICENSED CONTRACTOR ELECTRICAL PERMIT

COMMUNITY SERVICES AGENCY
Inspection Division
100 N. Jefferson Street, Rm. 608
Green Bay, WI 54301
(920) 448-3300 - phone
(920) 448-3117 - fax
inspmail@greenbaywi.gov

Project Address: _____

Owner: _____ Owner's Phone #: _____

Electrical Contractor: _____

Electrical Contractor's Email: _____

Electrical Contractor's Phone #: _____ Cell #: _____

Value of work: $ _____

This section for City use only
Project #: _____
Permit Code: _____
Permit Fee: _____
Parcel #: _____
Receipt #: _____
Date: _____

OCCUPANCY

☐ Single-Family ☐ Commercial ☐ Educational ☐ Multi-Family ☐ Number of Units _____
☐ Two-Family ☐ Manufacturing ☐ Other_____

NATURE OF WORK

☐ Alteration ☐ Repairs ☐ Addition ☐ Hot tub/spa ☐ Swimming Pool
☐ Remodeling ☐ Sign ☐ Detached Garage ☐ Other _____

JOB DESCRIPTION

_____

_____

_____

CONTRACTOR STATEMENT: I hereby certify that the above wiring upon completion will be in compliance with the applicable federal, state, local electrical codes and utility service rules.

"ENERGIZING THE DESCRIBED WIRING WILL IN NO WAY CREATE A HAZARD"

State of WI Electrical Contractor Certification #_____ **&** WI Master Certification #_____
(REQUIRED) **(REQUIRED)**

_____ _____
Signature (Master Electrician Responsible For Work) Date

INSPECTOR STATEMENT: I hereby certify the work completed as of date signed complies with applicable codes.

_____ _____
Inspector Signature Date

☐ Check box for Online Payment

☐ Phone_____ ☐ Fax_____ ☐ Email_____

Choose one of the above to receive notification of project number and permit fee, which is required to make payment online.

CURB CUT/CULVERT PERMIT
Department of Public Works
City of Green Bay, WI

Date: _____ Applicant Phone: _____

I/We, _____,
hereby request(s) permission:

☐ To remove curb as per diagram and hard surface (concrete or bituminous concrete) the apron,

OR

☐ To have the City of Green Bay install a culvert and agree to pay for all costs thereof or to place said charges on the City tax roll against the property described below.

Address: _____,

Lot _____, Block _____, _____ Subdivision.

Said work to be done under the supervision of the Director of Public Works and subject to his orders. It is further stipulated with the City of Green Bay, on the part of the applicant, that the provisions of all Municipal Code of Ordinances of the City of Green Bay regulating the excavation and/or damaging of streets will be fully complied with.

The driveways shall be located in accordance with the following:

☐ Single-family or two-family dwelling(s). The attached sketch.

☐ Other than single-family or two-family dwellings. The site plan that was approved on: _____.

_____
Applicant Signature

_____
Director of Public Works

PRIVATE APRON CONSTRUCTION DETAIL (WITH EXISTING CURB)

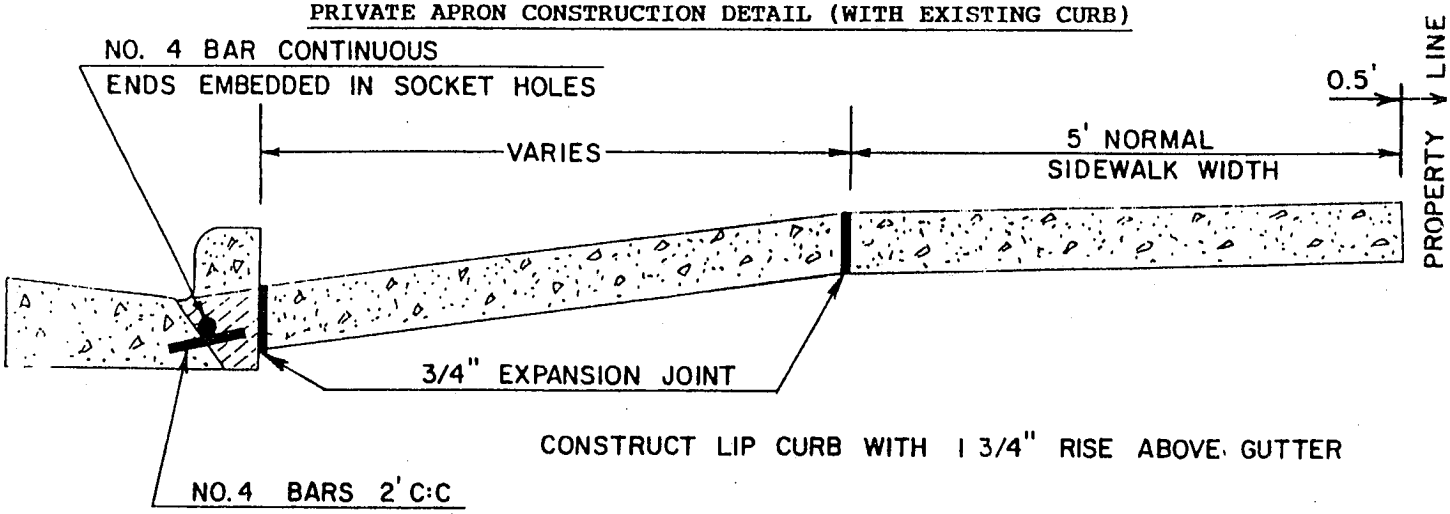

White-Applicant; Yellow-DPW/Eng.; Pink-DPW/Insp.(Apron); Pink-DPW/Opr.(Culvert)